CERTIFICATE

By Authority Of
THE UNITED STATES OF AMERICA
Legally Binding Document

By the Authority Vested By Part 5 of the United States Code § 552(a) and Part 1 of the Code of Regulations § 51 the attached document has been duly INCORPORATED BY REFERENCE and shall be considered legally binding upon all citizens and residents of the United States of America. *HEED THIS NOTICE*: Criminal penalties may apply for noncompliance.

Document Name: SAE J839B: Passenger Car Side Door Latch System

CFR Section(s): 49 CFR 571.201

Standards Body: Society of Automotive Engineers

APPROVED

Official Incorporator:
THE EXECUTIVE DIRECTOR
OFFICE OF THE FEDERAL REGISTER
WASHINGTON, D.C.

[redacted]

PASSENGER CAR SIDE DOOR LATCH SYSTEMS — SAE J839b

SAE Recommended Practice

Report of Body Engineering Committee approved November 1962 and last revised May 1965. Editorial change January 1968.

1. Scope—This SAE Recommended Practice establishes minimum performance requirements and test procedures for evaluating and testing passenger car side door latch systems. It is limited to tests that can be conducted on uniform test fixtures and equipment in commercially available laboratory test facilities.

The test procedures and minimum performance requirements outlined in this recommended practice are based on currently available engineering data. It is intended that all portions of the recommended practice will be periodically reviewed and revised, as additional knowledge regarding vehicle latch performance under impact conditions is developed.

2. Terminology

2.1 Latch—A mechanical device employed to position the door in a closed position relative to the vehicle body with provisions for controlled release (or operation).

Basic Latch Components (Nomenclature) are:

PLATE—The main body or frame for supporting working components, appendages and transmitting or distributing loads to the door structure.

ROTOR (OR BOLT)—The rotating or sliding member of the latch which engages and restrains the latch to the striker.

RATCHET—A member of the latch connected to the rotor to provide an abutment or abutments which, when properly indexed, become engaged with a related pawl to inhibit motion of the rotor in one direction.

PAWL—A member of the latch that can be caused to engage the abutments of the ratchet to inhibit relative motion between the two parts except in one direction.

2.2 Striker—A mechanical device with which the latch engages on the opposing member of the body.

2.3 Fully Latched Position—The attitude that exists between the latch and striker when the door is securely positioned in the fully

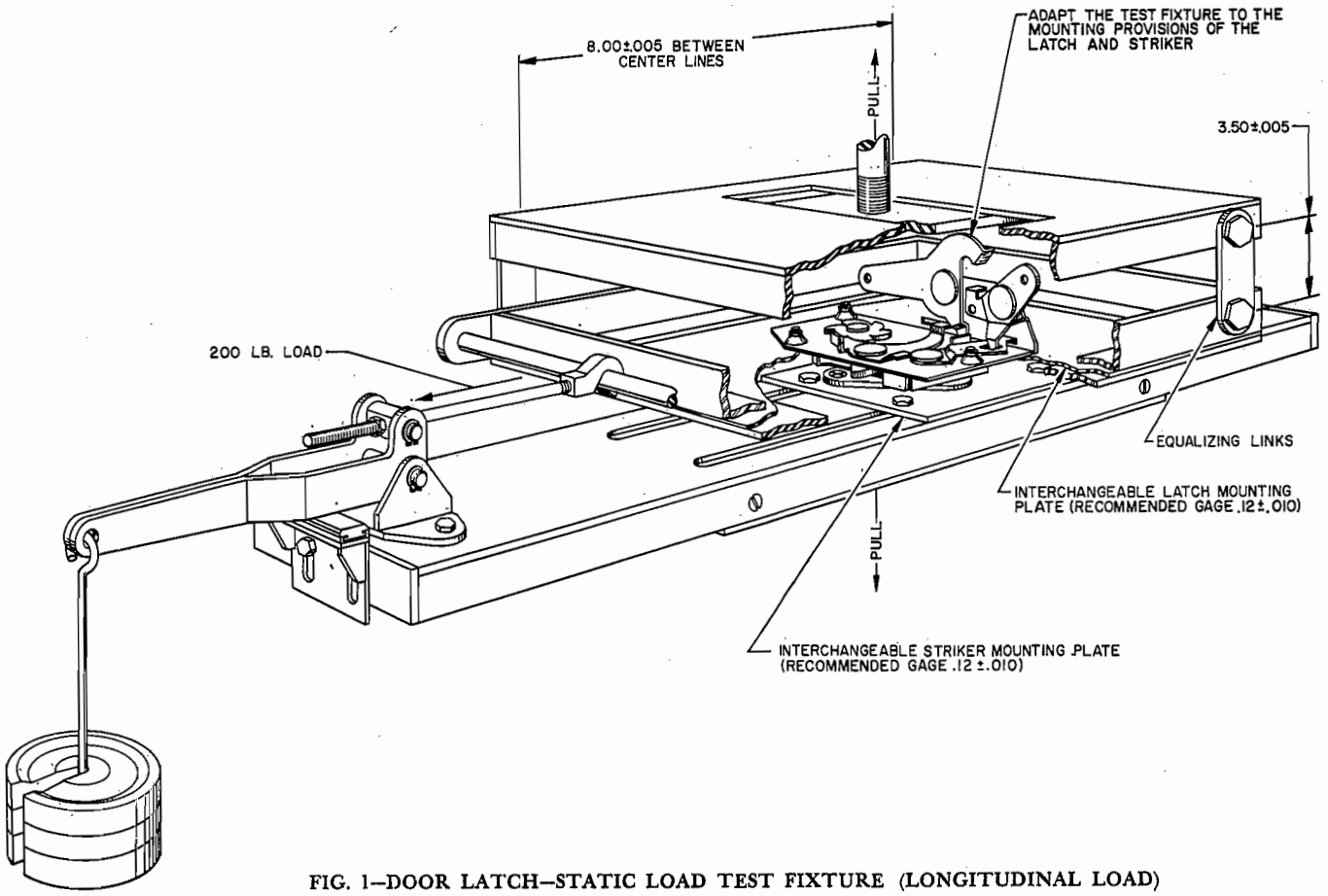

FIG. 1—DOOR LATCH—STATIC LOAD TEST FIXTURE (LONGITUDINAL LOAD)

closed position.

2.4 Secondary Latched Position—The attitude that exists between the latch and striker when the latch holds the door in a position less than fully closed.

NOTE: The secondary latched position may be included in the side door latch, as an added mechanical feature to reduce the possibility of the door opening freely, in the event the door is not closed to the fully latched position. It should be recognized that doors are intended to be in the fully latched position whenever the vehicle is in motion.

3. Basic Requirements

3.1 Longitudinal Load—An automotive door latch and striker assembly, when tested as described under test procedures, must be able to withstand an ultimate longitudinal load of 2500 lb when in the fully latched position (see paragraph 4.1) and 1000 lb when in the secondary latched position (see paragraph 4.2).

3.2 Transverse Load—An automotive door latch and striker assembly, when tested as described under test procedures, must be able to withstand an ultimate transverse load of 2000 lb when in the fully latched position (see paragraph 4.3) and 1000 lb when in the secondary latched position (see paragraph 4.4).

3.3 Inertia Load—An automotive door latch, when contained in the door latch system (including the door latch, striker assembly, outside handle, key cylinder and any connecting mechanisms) and, in the fully latched position, when evaluated by calculation, must remain in the fully latched position when subjected to an inertia load of 30 g in any direction. (See paragraph 5.)

NOTE: Due to the interdependency of the components, it is important that the door latch be analyzed within the confines of the total system and these results considered the basis of acceptance.

4. Static Tests

4.1 Longitudinal Load—Fully Latched Position—

4.1.1 Purpose—To determine the ability of the vehicle latch and striker to withstand a test load perpendicular to the face of the latch.

4.1.2 Equipment—

(a) Tensile testing machine.

(b) Static test fixture (see Fig. 1).

4.1.3 Operation—

(a) Attach the test fixture to the mounting provisions of the latch and striker. Align the direction of engagement parallel to the linkage of the fixture. Mount fixture with latch and striker in fully latched position in the test machine so as to apply a load perpendicular to the face of the latch.

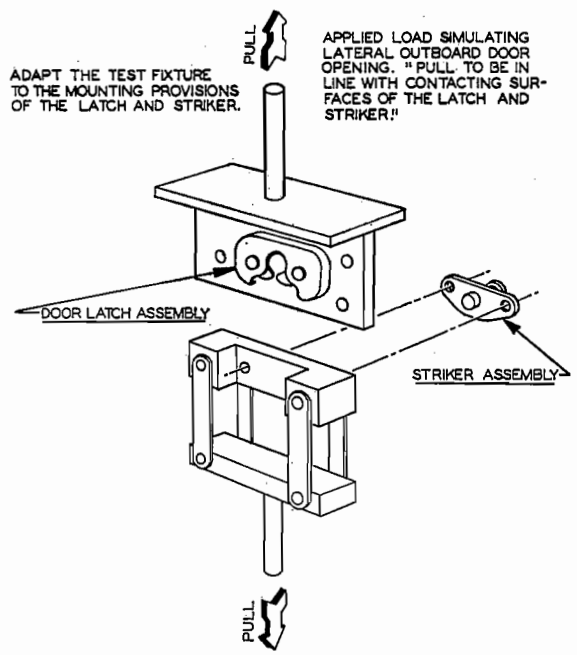

FIG. 2—DOOR LATCH—STATIC LOAD FIXTURE (LATERAL LOAD)

(b) Locate weights to apply a 200 lb load tending to separate the latch and striker in the direction of the door opening.

(c) Apply the test load at a rate not to exceed 0.2 in. per minute until failure. Record maximum load.

4.2 Longitudinal Load—Secondary Latched Position—

4.2.1 PURPOSE—To determine the ability of the vehicle latch and striker in the secondary position to withstand a test load perpendicular to the face of the latch.

4.2.2 EQUIPMENT—

(a) Tensile testing machine.

(b) Static test fixture (see Fig. 1).

4.2.3 OPERATION—

(a) Attach the test fixture to the mounting provisions of the latch and striker. Align the direction of engagement parallel to the linkage of the fixture. Mount fixture with latch and striker in secondary latched position in the test machine as so to apply a load perpendicular to the face of the latch.

(b) Locate weights to apply to 200 lb load tending to separate the latch and striker in the direction of the door opening.

(c) Apply the test load at a rate not to exceed 0.2 in. per minute until failure. Record maximum load.

4.3 Transverse Load—Fully Latched Position—

4.3.1 PURPOSE—To determine the ability of the vehicle latch and striker to withstand the test load in the direction of door opening.

4.3.2 EQUIPMENT—

(a) Tensile testing machine.

(b) Static test fixture (see Fig. 2).

4.3.3 OPERATION—

(a) Adapt the test fixture to the mounting provisions of the latch and striker. Mount fixture with the latch and striker in fully latched position in the test machine so as to apply a load in the direction of door opening.

(b) Apply the test load at a rate not to exceed 0.2 in. per minute until failure. Record the maximum load.

4.4 Transverse Load—Secondary Latched Position—

4.4.1 PURPOSE—To determine the ability of the vehicle latch and striker in the secondary position to withstand the test load in the direction of door opening.

4.4.2 EQUIPMENT—

(a) Tensile testing machine.

(b) Static test fixture (see Fig. 2).

4.4.3 OPERATION—

(a) Adapt the test fixture to the mounting provisions of the latch and striker. Mount fixture with the latch and striker in secondary latched position in the test machine so as to apply a load in the direction of door opening.

(b) Apply the test load at a rate not to exceed 0.2 in. per minute until failure. Record the maximum load.

5. Inertial Analysis

5.1 Purpose—To determine the ability of the vehicle latch system to resist inertia loading by means of a mathematical analysis of the component parts in their true car relationship.

NOTE: Due to the complexity of physical testing for inertial characteristics it is judged to be more practical and more accurate to base evaluations on mathematical analysis. The procedure described in this section provides a means for analytically determining the ability of a door latch system to withstand inertia loading. Spring forces are considered average minimum. Friction effects and work to be done are not considered in the calculations. Gravitational pull on components may also be omitted if it tends to restrict unlatching. These omissions from the calculations are permissible because they provide additional factors of safety.

5.2 Calculation Consideration—Each component or subassembly can be calculated for its minimum inertia load resistance in a particular direction. Their combined resistance, to the unlatching operation, must assure that the door latch system (when properly assembled in the vehicle door) will remain latched when subjected to an inertia load of 30 g in any direction. Fig. 3 is an example of the components and combinations of components to be considered.

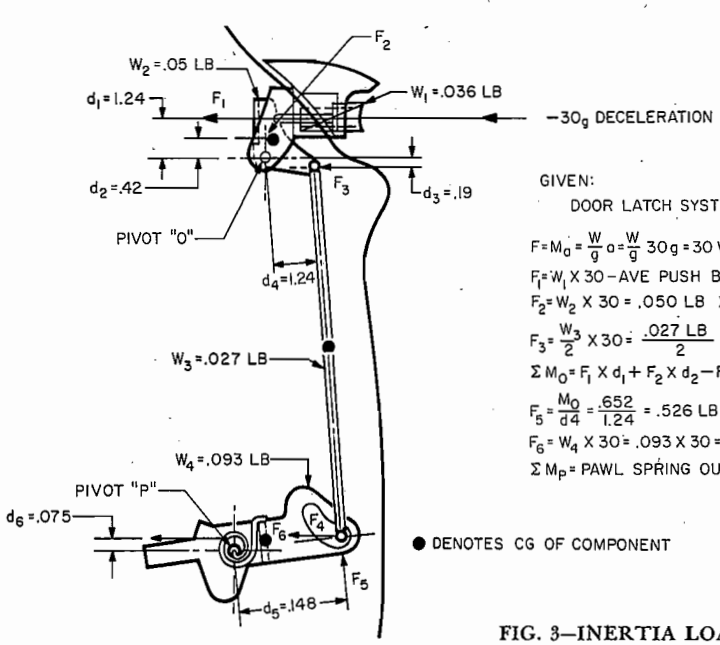

GIVEN:

DOOR LATCH SYSTEM SUBJECTED TO 30g DECELERATION

$F = M_a = \frac{W}{g} a = \frac{W}{g} 30g = 30\,W$

$F_1 = W_1 \times 30 - \text{AVE PUSH BTN. SPRING OUTPUT} = (.036\text{ LB} \times 30) - 1.00\text{ LB} = .080\text{ LB}$

$F_2 = W_2 \times 30 = .050\text{ LB} \times 30 = 1.50\text{ LB}$

$F_3 = \frac{W_3}{2} \times 30 = \frac{.027\text{ LB}}{2} \times 30 = .405\text{ LB}$

$\Sigma M_O = F_1 \times d_1 + F_2 \times d_2 - F_3 \times d_3 = .08\text{ LB} \times 1.24\text{ IN.} + 1.50\text{ LB} \times .42\text{ IN.} - .405\text{ LB} \times .19\text{ IN.} = .652\text{ IN.-LB}$

$F_5 = \frac{M_O}{d4} = \frac{.652}{1.24} = .526\text{ LB}$

$F_6 = W_4 \times 30 = .093 \times 30 = 2.79\text{ LB}$

$\Sigma M_P = \text{PAWL SPRING OUTPUT} - (F_5 d_5 + F_6 d_6) = 3.96\text{ IN.-LB} - (.526 \times 1.48 + 2.79 \times .075) = 2.972\text{ IN.-LB}$

FIG. 3—INERTIA LOADING—SAMPLE CALCULATION

[redacted]