CERTIFICATE

By Authority Of
THE UNITED STATES OF AMERICA
Legally Binding Document

By the Authority Vested By Part 5 of the United States Code § 552(a) and Part 1 of the Code of Regulations § 51 the attached document has been duly INCORPORATED BY REFERENCE and shall be considered legally binding upon all citizens and residents of the United States of America. *HEED THIS NOTICE*: Criminal penalties may apply for noncompliance.

Document Name: SAE J231: Minimum Performance Criteria for Falling Object Protective Structures (FOPS)

CFR Section(s): 29 CFR 1910.266(f)(3)(iii)

Standards Body: Society of Automotive Engineers

APPROVED

Official Incorporator:
THE EXECUTIVE DIRECTOR
OFFICE OF THE FEDERAL REGISTER
WASHINGTON, D.C.

[redacted]

MINIMUM PERFORMANCE CRITERIA FOR FALLING OBJECT PROTECTIVE STRUCTURE (FOPS)—SAE J231 JAN81

SAE Recommended Practice

Report of the Construction and Industrial Machinery Technical Committee, approved May 1971, editorial change January 1981.

ed. *1. Objective*—This SAE Recommended Practice establishes a consistently repeatable laboratory evaluation procedure and performance requirements in that evaluation for structures intended to provide operators with reasonable protection from such falling objects as trees and rocks.

ed. *2. Scope*—This Recommended Practice applies only to machines covered *ed.* by SAE J1040c (ROPS). The evaluations are for resistance to localized pene- *ed.* tration. The performance requirements, of a representative specimen within the manufacturer's specifications, are based on the performance of experience proven structures under the laboratory evaluation procedure. It is intended that all portions of this Recommended Practice shall be reviewed and revised as additional knowledge of FOPS performance becomes available.

3. Facilities and Apparatus

3.1 **Facilities**

3.1.1 A standard laboratory drop test object, made of steel, as shown in Fig. 1.

3.1.2 A means of raising the standard object to the required height.

3.1.3 A means of releasing the standard object so that it falls without restraint.

3.1.4 A surface of such firmness that it shall not be penetrated by the machine or test bed under the loading of the drop test.

3.1.5 A means of determining if the FOPS enters the deflection limiting *ed.* zone (DLV, see SAE J397b) during the drop test. This may be either of the following:

3.1.5.1 A DLV in the upright attitude, made of a material which will indicate any penetration by the FOPS. Grease may be put on the lower surface of the FOPS cover to indicate such penetration.

3.1.5.2 A dynamic instrumentation system of sufficient frequency response to indicate the pertinent deflection with respect to the DLV.

3.2 **Apparatus**—Means to measure a deflection of FOPS with an accuracy of ±5% of maximum deflection.

4. Machine or Test Bed Condition

4.1 The FOPS to be evaluated must be attached to the machine structure as it will be in actual vehicle use. A complete machine is not required; however, the portion to which the FOPS is mounted must be identical to the actual structure, and the vertical stiffness of a test bed must be not less than that of an actual machine as described in paragraph 4.2.

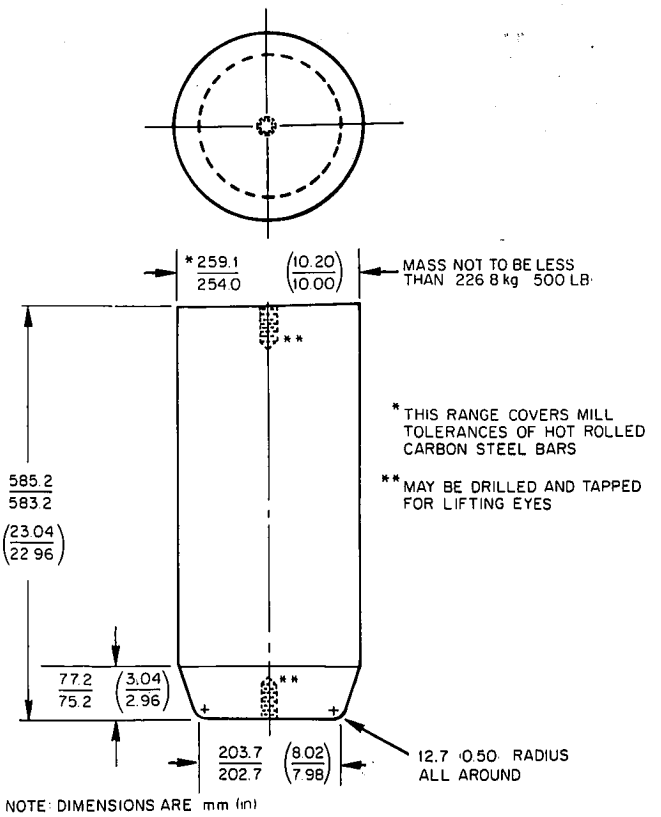

ed. FIG. 1

4.2 If the FOPS is mounted on a machine, the following stipulations apply:

4.2.1 There are no limitations on customary attachments and/or payload.

4.2.2 All ground engaging tools shall be in normal carry positions.

4.2.3 All suspension systems, including pneumatic tires, shall be set at operating levels. Variable suspensions shall be in the "hard" range.

4.3 All cab elements, such as windows, normally removable panels, or nonstructural fittings, are to be removed so that they do not contribute to the strength of the FOPS.

ed. 4.4 Test specimens shall be representative units within the manufacturer's specifications.

5. Drop Test Procedure

5.1 The standard laboratory drop test object (Fig. 1) shall be placed on top of the FOPS (small end of the object down) at the location designated in paragraphs 5.2, 5.3, and 5.4.

5.2 The small end of the object is to be entirely within the vertical projection of the DLV on the FOPS top.

5.3 Within the limitation of paragraph 5.2, the object shall be so placed that it has the least possible distance from the centroid of the FOPS top. (The area whose centroid is referred to is that portion of the FOPS cover that is not over major, upper, structural members.) See Fig. 2.

5.4 Should the vertical projection of the DLV be divided into two, or more, segments by vertical projections of major, upper, structural members, the directions of paragraph 5.2 and 5.3 shall apply to the segment containing the greatest area of the DLV projection. See Fig. 3.

ed. 5.5 The object is to be raised vertically 5.19 m (17 ft) above the position indicated in paragraphs 5.2, 5.3, and 5.4.

5.6 The object is to be released so that it falls without effective restraint onto the FOPS.

5.7 As it is unlikely that the free fall will result in the object hitting at the location and/or in the attitude of paragraphs 5.1, 5.2, 5.3, and 5.4, the following limits are placed on deviations:

5.7.1 The initial impact of the small end of the object shall be entirely within a circle of 200 mm (8 in) radius. (The center of this circle is to coincide with the vertical centerline of the object as positioned per paragraphs 5.1–5.4, but not on any major, upper, horizontal member.)

5.7.2 The first contact between the object and the FOPS shall be only along the small end of the object and/or the radius contiguous to that end (Fig. 1).

5.7.3 There is no limitation on location or attitude of subsequent impacts.

6. Performance Requirements

6.1 The DLV shall not be entered by any deflection of the FOPS under the first or any subsequent impacts of the drop test object.

6.2 The FOPS shall also meet the applicable minimum performance criteria for rollover protective structure (SAE J1040). (Identical, but not necessarily the same, structures are to be used for the FOPS and ROPS evaluations. Should the same structure be used for both evaluations, the drop test procedure shall precede the ROPS loading with removal of impact dents or replacement of the FOPS cover permissible.)

6.3 The drop test shall be performed with the FOPS cover at −18°C (0°F), or below, or the material used in the FOPS cover shall exhibit one of the Charpy V notch impact strengths at −30°C (−20°F) shown in Table 1. (SAE Information Report J1119 presents more data on specifics of CVN specimen size-test temperature interaction that meets the intent of the basic requirements of Table 1. SAE J1119 also gives information on chemistries, manufacturing processes, and tensile properties of steel suitable for use in FOPS but only the CVN impact strengths are the mandatory requirement for the FOPS material option.) *ed.*

TABLE 1—MINIMUM CHARPY V NOTCH IMPACT STRENGTHS

Specimen Size, mm	J	ft-lb	Specimen Size, mm	J	ft-lb
10 × 10[a]	11.0	8.0	10 × 6	8.0	6.0
10 × 9	10.0	7.5	10 × 5[a]	7.5	5.5
10 × 8	9.5	7.0	10 × 4	7.0	5.0
10 × 7.5[a]	9.5	7.0	10 × 3.3	6.0	4.5
10 × 7	9.0	6.5	10 × 3	6.0	4.5
10 × 6.7	8.5	6.5	10 × 2.5[a]	5.5	4.0

[a]Indicates preferred size. Specimen size shall be no less than the largest preferred size that the material will permit.

Reference: ASTM A 370, Standard Methods and Definitions for Mechanical Testing of Steel Products.

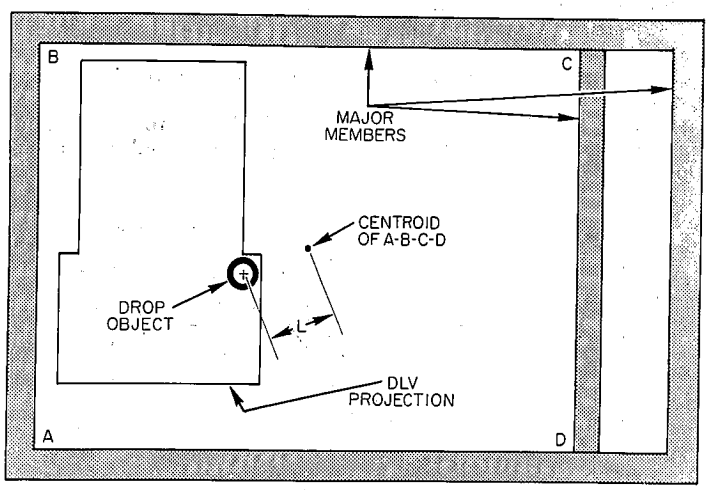

FIG. 2

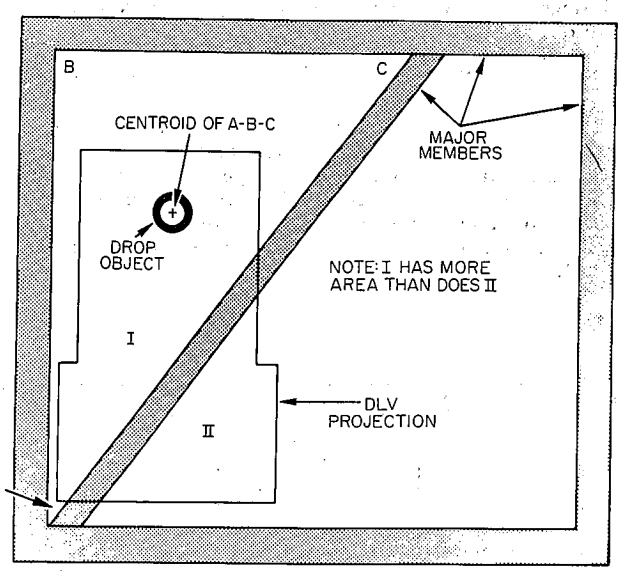

FIG. 3