CERTIFICATE

By Authority Of
THE UNITED STATES OF AMERICA
Legally Binding Document

By the Authority Vested By Part 5 of the United States Code § 552(a) and Part 1 of the Code of Regulations § 51 the attached document has been duly INCORPORATED BY REFERENCE and shall be considered legally binding upon all citizens and residents of the United States of America. *HEED THIS NOTICE*: Criminal penalties may apply for noncompliance.

Document Name: SAE J2260: Non-metallic Fuel System Tubing with One or More Layers

CFR Section(s): 40 CFR 1048.105(a)(2)

Standards Body: Society of Automotive Engineers

APPROVED

Official Incorporator:
THE EXECUTIVE DIRECTOR
OFFICE OF THE FEDERAL REGISTER
WASHINGTON, D.C.

NONMETALLIC FUEL SYSTEM TUBING WITH ONE OR MORE LAYERS—SAE J2260 NOV1996

SAE Standard

Report of the SAE Fuel Lines and Fittings Standards Committee approved November 1996.

1. Scope—This SAE Standard covers the minimum requirements for multilayer, nonmetallic tubing as manufactured as a liquid-carrying or vapor-carrying component for use in gasoline, alcohol blends with gasoline, or diesel fuel systems. Monowall tubing (one layer construction) is also covered by this document. The construction has one or more layers of polymer-based compounds in the wall, primarily for the purpose of improvement in permeation resistance to hydrocarbons found in various fuels. The construction can have a straight-wall configuration or can have a wall that is partially convoluted or corrugated. It may have an innermost layer with improved electrical conductivity for use where such a characteristic is desired; also, the improved electrical conductivity can apply to the entire wall construction, if the tubing is a monowall. This document is intended to cover tubing for any portion of a fuel system which operates above –40 °C, and below 115 °C, and up to a maximum working gage pressure of 690 kPa. The peak intermittent temperature is 115 °C. For long-term continuous usage, the temperature shall not exceed 90 °C.

In some cases, a distinction is made in the criteria that apply to tubing used to carry liquid fuel compared to tubing used to carry fuel vapor. The term "fuel vapor" can also apply to evaporative emissions and refers to a condition where the fuel content is in vapor form (very low concentration) and operates at a working gage pressure that does not exceed 17 kPa. The fuel vapor, or evaporative emissions, may contain small quantities of liquid fuel, which are present primarily as a result of vapor condensation.

2. References

2.1 Applicable Publications—The following publications form a part of this specification to the extent specified herein. Unless otherwise indicated, the latest issue of SAE publications shall apply.

2.1.1 SAE PUBLICATIONS—Available from SAE, 400 Commonwealth Drive, Warrendale, PA 15096-0001.

SAE J1645—Information Report Covering Electrostatic Charge in Fuel Systems (FEB94 and latest)

SAE J1681—Gasoline/Methanol Mixtures for Material Testing

SAE J1737 (DRAFT)—Recommended Practice for Measurement of Permeation Resistance by the Recirculation Technique

SAE J1960—Accelerated Exposure of Automotive Exterior Materials Using a Controlled Irradiance Water-Cooled Xenon-Arc Apparatus

SAE J2027—Standard for Protective Covers for Gasoline Fuel Lines

SAE J2044—SAE Quick Connector Specifications for Liquid Fuel Systems

SAE J2045—Tube/Hose Assemblies

2.1.2 ISO PUBLICATIONS—Available from ANSI, 11 West 42nd Street, New York, NY 10036-8002.

ISO 527—Plastics—Determination of tensile properties

ISO 4639-3—Rubber tubing and hoses for fuel circuits for internal combustion engines specification—Part 3: Oxidized fuels

2.2 Related Publications—The following publications are for information purposes only and are not a required part of this document.

2.2.1 SAE PUBLICATIONS—Available from SAE, 400 Commonwealth Drive, Warrendale, PA 15096-0001.

SAE J30—Fuel and Oil Hoses

SAE J2043—Standard for Nonmetallic Fuel System Tubing

2.2.2 ASTM PUBLICATIONS—Available from ASTM, 100 Barr Harbor Drive, West Conshohocken, PA 19428-2959.

ASTM D 412—Test Methods for Rubber Properties in Tension

ASTM D 4000—Classification System for Specifying Plastic Materials

ASTM D 4066—Specification for Nylon Injection and Extrusion Materials

3. Installation, Assembly, and Handling Recommendation

3.1 End Fittings—End fittings are to be assembled to the tubing with a procedure which does not permit mechanical damage to the tubing that results in decreased performance. Requirements of such end fittings are covered in SAE J2044 documentation. Assemblies manufactured with such end fittings must meet all of the requirements of the SAE J2045 specification.

3.2 Support and Routing—When installed in a vehicle this tubing shall be routed and supported so as to:

a. Prevent chafing, abrasion, kinking, or other mechanical damage.
b. Be protected against road hazards by installation in a protected location or by providing adequate shielding in vulnerable areas.
c. Be protected from heat by proper clearance or the addition of insulation and/or heat shielding (refer to SAE J2027), for use in applications where temperatures may briefly exceed the upper limits of 115 °C.

3.3 Handling—Tubing ends should be protected during handling and storage to prevent internal contamination.

4. Construction—Tubing shall consist of an extrusion of one or more layers within the body of the wall. The dimensions and tolerances of the one or various layers shall be expressed in millimeters and the general material name should be called out on the drawing. In those specific cases where material specifications exist for a given tubing construction, they shall be identified for the entire wall or for each individual layer.

4.1 Materials—The materials used in the construction of the tubing have different requirements depending on their location within the wall. The various materials used may also use plasticizers, colorants, impact modifiers, and other additives to enhance performance provided the tubing produced complies to the requirements of this standard.

If monowall tubing is used, then the material used must meet all exposure criteria described in this document.

4.1.1 OUTER LAYER—Materials used in the outer layer must conform to the exposure test described in 7.5. There may be additional environments to which the tubing construction will be exposed; the end user should be consulted for what additional requirements may be appropriate. Refer to 4.3 for comments on color.

4.1.2 INNER LAYER—Materials used in the inner layer must conform to the fuel exposure tests described in 7.7 and 7.8. There may be other fuels to which the tubing construction will be exposed. The end user should be consulted for what additional requirements there may be.

The materials used in the inner layer should also be able to withstand contact with road chemicals. This is the case because the inner layer of the tubing can be exposed to such an environment at the "ends" that are attached to the various connection points in a fuel system. It is for this reason that the ends of the tubing are also exposed to the chemical resistance test in 7.5.

4.2 Regrind—Small amounts of regrind may be used in the manufacture of tubing. Tubing containing the selected percentage of regrind that will be used in production must meet all the performance criteria in this document.

4.2.1 USE OF REGRIND OF A SPECIFIC RESIN—Use of regrind material blended with virgin resin in a specific layer of the MLT (or in the wall of the monowall tubing) is permissible only when the manufacturer has identified a specific percentage of the regrind that will be used. In this case, that regrind can be used to blend with the virgin resin of the same type only in the specific layer where that material is used (or tubing wall, in the case of monowall tubing). Such regrind being blended shall contain no contaminants of any other material.

All performance criteria in this document must be met by conducting all tests on tubing that contains the specific regrind percentage in the particular designated layer. Once the performance of a multilayer tubing containing regrind material blended in a specific layer has been validated, acceptance of such tubing applies only to the specific resin in the specific layer and only to that manufacturer involved. Any regrind percentage up to or equal to the level approved can be used.

If regrind is used in the portions of the tube that is outermost or innermost, there could be a deleterious effect that could result in the tubing's ability to perform in the external environment (i.e., heat-aging) or in fuel exposure in the very long term. Testing in this specification includes exposure tests only up to 1000 h, involves only certain fuels, and is conducted at only mildly aggressive temperatures (40 °C). The end user should be consulted for guidance on how tests for the presence of regrind in the innermost or outermost portions of the tubing should be conducted. Longer term exposures or more aggressive test parameters than those indicated in the specification may be advisable to confirm there is no negative effect.

It is recommended that no more than 10% regrind is blended in the innermost or outermost layer; that percentage also applies to monowall tubing. If regrind is blended in other layers, it is recommended that no more than 20% regrind is used.

4.2.2 USE OF REGRIND RESIN OR MLT IN A SEPARATE LAYER—It's possible to use regrind of resin or regrind of completed multilayer tubing (MLT) as an additional and separate layer in the construction of an MLT; to do so, the following criteria must be met:

a. It is used only in a separate layer that is in addition to the number of layers in the construction of the MLT being produced.
b. The regrind layer should not be the innermost or outermost layer of the tubing construction.
c. It is recommended to use a maximum thickness of 10% (of the total tubing wall thickness) for the regrind layer.

For a construction that contains an additional and separate layer of regrind resin or regrind MLT, all performance criteria of this specification must be met. The testing done shall be on tubing that contains the specific type of regrind layer in the specific, identified position within the wall. Once the performance of such an MLT has been validated, acceptance of such a construction applies only to that layer configuration and only to the specific manufacturer involved. Any layer thickness of that regrind layer up to (or equal) to the specific thickness approved can be utilized.

4.3 Color—The normal color of the outside layer of tubing covered under this document is black, although alternative colors are permissible. Fuel system tubing shall be labeled in a contrasting color with the legend repeated every 500 mm or less along the entire length of tubing in legible block capital letters.

The color of the outside layer of the MLT constructions covered by this document is usually black. They can be another color, chosen for purposes of color-coding for routing through the vehicles. For whatever color is chosen, the following criteria must be met:

a. The tubing color and the label color chosen must be such that there is sufficient contrast with the color of the printing to achieve easy readibility.
b. Material used in outside layer may be extensively exposed to sunlight during storage or use. The material should be U.V. stabilized to withstand such expected exposure (either with an additive or by the inherent characteristics of the material). Requirements necessary to adequately resist sunlight exposure will depend strongly on the application. The end user must be consulted for specific standards to be met. As a general guideline, also refer to SAE J1960.

4.4 Identification—The following minimum information, in the order listed, is required. Additional information and/or another lay line may be added: SAE J2260 - D-T-P.

a. "D" refers to the reference size or nominal tubing diameter (OD) in mm from Tables A1 or A2A located in the Appendix.
b. "T" refers to the type of tube.
   1. Type NF—This is an MLT construction that is "non-conductive" by 7.9 and passes all requirements of this specification for carrying liquid fuel.
   2. Type CF—This is an MLT construction that is "conductive" by 7.9 and passes all requirements of this specification for carrying liquid fuel.
   3. Type NV—This is an MLT construction that is "non-conductive" by 7.9 and passes all requirements of this specification for carrying fuel vapor.
   4. Type CV—This is an MLT construction that is "conductive" by 7.9 and passes all requirements of this specification for carrying fuel vapor.
c. "P" refers to the permeation category (for the 4 types of tubing indicated previously) as determined by the procedures described in 7.10. It shall be a single digit that is identified from 7.10.2.
d. If it is not practical to print on the outside of the tubing (convoluted tubing or tubing with an outside surface that is not smooth, for example), then the labeling will be done by a tag or loop of tape permanently attached to the outside circumference of the tubing. Such labeling must be repeated every 500 mm or less along the entire length.

   For convoluted or corrugated tubing, the necessary printing can be done by the labeling or tagging procedure that is described. An acceptable alternative is to print the necessary wording only on each straight end section.

5. Dimensions—Tubing of various sizes and routed with certain bend radii are described in this specification. The end user should be consulted for specific requirements. What is detailed in this specification are recommended dimensions, tolerances, etc., based on common practices within the automotive industry and by participants in the fuel system business.

5.1 Tubing Sizes and Dimensions

5.1.1 DIAMETERS—For liquid fuel lines, the typical nominal OD's of the tubing used are in the range up to 10 mm. Lines that are over 10 mm nominal OD are typically used for fuel vapor. The end user should be consulted for specific requirements. The details on diameters are found in Tables A1, A2A and A2B.

5.1.2 WALL THICKNESS—Wall thicknesses vary for different tubing sizes and for the various classes of materials that are used in the construction of the tubing. Typical wall thicknesses for straight wall tubing are 1 mm ± 0.1 mm for nominal OD sizes up to 10 mm; the wall is thicker for larger OD sizes.

There are numerous factors that can have an influence on the wall thickness that is selected:

a. Higher required burst pressure could mean a thicker wall is required
b. As walls become thicker, the minimum bend radius increases
c. For MLT constructions with elastomeric covers, the critical dimension is the ID. The wall thickness is determined by the materials utilized and the requirements of the application
d. Tubing wall thickness may differ for convoluted/corrugated wall (refer to Section 6)

The result of all these factors is that the end user must be consulted to determine all requirements. The wall thickness is then determined by those requirements and the materials selected for the various layers of the multilayer tubing or for the monowall tubing.

Details on the suggested wall thicknesses are found in Tables A1, A2A, and A2B.

5.1.3 DIMENSIONAL TOLERANCES—Recommended tolerances of the various dimensions suggested for the tubing described in this document are found in Tables A1, A2A, and A2B. Actual tolerances used are determined by manufacturing capability and the requirements of the end user.

5.2 Minimum Bend Radius—When a tubing is routed as part of a vehicle system, there are occasional "free-state" bends that occur. Care must be taken to ensure that such bends do not occur at radii that are so tight that the inside dimensions of the tubing distort excessively. The end user should be consulted to determine the actual minimum bend radius that the tubing will encounter in a specific application. That detail should then be compared to the bend radius details described in 7.3.1. If the actual minimum bend radius is smaller than indicated by the appropriate table in 7.3.1, then the procedure of 7.3.2 should be followed to verify if the actual minimum bend of the application imposes a problem.

For the purposes of the performance measurements described in 7.3.3, the smaller of the two possible bend radii should be used (smaller of the appropriate calculation of Table 1/Table 2 or the required bend radius of actual application).

6. Convoluted or Corrugated Tubing—Tubing that has an OD over 10 mm may not be flexible enough for some applications. One way to resolve this concern is to use multilayer tubing with a wall that has a convoluted or corrugated configuration for all or portions of its length. There are certain criteria that must be met if such tubing is used; they are listed as follows:

a. The normal size of this tubing shall be the same as straight-wall tubing whose inside-diameter dimensions are the same as the effective inside diameter of the corrugated/convoluted tubing (e.g., a 12 mm convoluted tubing has an effective inside diameter of 9 mm (see Table A1)).
b. For the parts of the tubing that are not convoluted or corrugated, the size and dimensions that are used will be the same as described in 5.1.
c. At each end of the convoluted or corrugated tubing, there will be a straight section (sometimes called a cuff) that is a minimum of 30 mm in length. This section is the part of the tubing used to join the tubing to connectors, nipples, and other attachment elements. The dimensions of this cuff will correspond to those identified on Tables A1, A2A, and A2B.
d. Wall thickness of the convoluted/corrugated portions of the tubing may differ from those indicated in Table A1. This is due to the manufacturing process. Wall thickness deviations should be identified, and discussed with the end user. Performance test results will be used to gain agreement from the end user that such "routinely occurring" variations in wall thickness are acceptable.
e. Tubing with a convoluted or corrugated wall configuration is typically used in vapor or evaporative emissions applications. It is possible that such convoluted or corrugated tubing can be used in liquid fuel applications. Any tubing used in liquid fuel applications must meet the requirements called for in 7.9. In addition, the end user must be consulted and the final application must be carefully tested to determine that no unacceptable electrostatic charge situation develops (refer to SAE J1645).

7. Performance Requirements—All tests described in this standard are to be performed on the completed product (tubing). It must meet all applicable criteria described in this specification. Differences in performance criteria between liquid fuel and fuel vapor applications are indicated in the procedure or acceptance criteria of each section. If no distinction is made, both liquid and vapor fuel lines must meet the entire requirement as written.

The tubing shall meet the following performance tests with a ±3 S capability. Tubing shall be conformance tested no sooner than 24 h after production.

All test temperatures specified may vary by ±2 °C, unless otherwise specified. All times are minimum unless otherwise specified.

7.1 Room Temperature Burst Test

7.1.1 INITIAL BURST TEST MEASUREMENT—Tubing shall be stabilized for 1/2 to 3 h at 23 °C and tested by increasing pressure of a fluid inside the tubing at a rate of 7 MPa/min ± 1 MPa/min. Continue at that rate until tubing bursts. Any type of fitting can be used during this burst test. If the connectors blow out of the tubing before the required level of burst pressure is reached, the data from that particular sample should be discarded. Additional clamps over the existing connectors or fittings may be utilized, if necessary, to ensure that the tubing sample fails by bursting.

The end user shall be consulted to establish the maximum pressure that can be encountered system in which the tubing will be used.

7.1.1.1 Acceptance Criteria—Minimum burst pressure of any one sample shall be 8 times the maximum pressure that can be encountered in the system in which the tubing will be used.

NOTE—If the maximum pressure is not known, then the measured burst pressure is recorded so it can be reported and compared to the requirements of a specific liquid or vapor system at some future time.

7.1.2 BURST TEST MEASUREMENTS AFTER EXPOSURES—An additional acceptance criteria is the comparison of the burst pressure test values of the tubing before exposure compared to the tubing after exposure, as detailed in Section 7. All values for burst test measured after exposure must be equal to or greater than 75% of the value of burst test measured on the tube prior to the exposure test. This criteria applies to the tests described in 7.5, 7.6, 7.7, and 7.8.

7.2 High Temperature Burst Test

7.2.1 The test procedure described in 7.1.1 shall be performed at a temperature of 115 °C.

NOTE—The fluid used in this burst test shall also be at the same temperature.

The end user shall be consulted to establish the maximum pressure that can possibly be encountered in the specific liquid or vapor system in which the tubing will be used.

7.2.1.1 Acceptance Criteria—Minimum burst pressure shall be three times the maximum pressure that can be encountered in the system in which the tubing will be used.

NOTE—If the maximum pressure is not known, then the high temperature burst pressure is recorded so it can be reported and compared to the requirements of a specific liquid or vapor system at some future time.

7.3 Resistance to Kinking

7.3.1 CALCULATION OF MINIMUM BEND RADIUS—The formulae shown in Tables 1 and 2 shall be used to determine the minimum bend radius for tubing with dimensions as indicated in Tables A1, A2A, and A2B.

TABLE 1—MINIMUM BEND RADII FOR VARIOUS MLT SIZES

Reference Size of Tubing (From Tables A1, A2A and A2B)	Minimum Bend Radius
<8 mm	6 X Reference Size OD
8 £ OD < 12 mm	7.5 X Reference Size OD
12 £ OD < 18 mm	8.5 X Reference Size OD
Š18 mm	10 X Reference Size OD

TABLE 2—MINIMUM BEND RADII FOR VARIOUS SIZES OF MLT (WITH ELASTOMERIC OUTER LAYER)

Reference Size of Tubing (From Tables A1, A2A, and A2B)	Minimum Bend Radius
<6 mm	8 X Reference Size ID
6 £ ID < 9 mm	10 X Reference Size ID
9 £ ID < 14 mm	12 X Reference Size ID
Š14 mm	13 X Reference Size ID

Tubing that is part of this document can be bent at a tighter radii than the formulae shown in Tables 1 and 2. The procedure to determine this is described in the following section. The performance criteria that must be met for any tubing configured at the minimum bend radius is described in 7.3.3.

7.3.2 PROCEDURE TO DETERMINE MINIMUM BEND RADIUS—The following procedure can be used to determine if a tubing can be bent in a tighter radius than is indicated by the formula in Table 1 or Table 2 and to approximate what that bend radius may be. The procedure is shown in Figure 1.

The tubes are to be bent in a free state until they form a coil, the free ends are then grasped, wrapped over the first loop of tubing to form a two-layered coil of tubing. The tubing is drawn down to the smallest coil diameter possible within 1 min and without kinking the tubing. The measurement of the minimum bend radius is made by taking 1/2 the measured value of the inside diameter (inside wall to inside wall of coil of tubing). The length of tubing used for this test shall vary with different diameters of the tubing. The length shall be enough so that the procedure shown in Figure 1 can be accomplished with at least 100 mm of tubing extending beyond the circle on both sides.

It is important to note that the radius measured by this procedure is an approximation. The performance test of 7.3.3 must be passed to confirm that the estimated bend radius can be achieved without kinking.

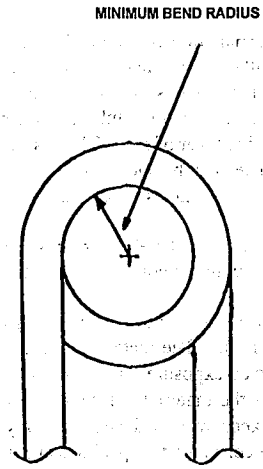

FIGURE 1—ILLUSTRATION OF PROCEDURE FOR DETERMINING MINIMUM BEND RADIUS

7.3.3 RESISTANCE TO KINKING—TEST PROCEDURE—This test procedure is to determine if a tube can meet the minimum bend radius dimensions from Table 1, Table 2, or from the procedure of 7.3.2.

First step is to identify the minimum bend radius dimension that is to be tested for a specific tubing diameter. A tubing test specimen shall then be cut to length equal to: (1.2xp) x minimum radius.

The tubing specimen shall then be placed in a fixture as shown in Figure 2. When installing the tube, it shall be bent in the same plane and direction as its free state curvature. Place the tube, installed on the fixture, into an oven at 115 °C and soak for 1 h. Remove the fixture from the oven and pass the specified steel ball through the tube on the fixture. Tubing and fixture can be allowed to cool to room temperature for easier handling.

The diameter of the ball shall be determined by Equation 1:

$$\text{Ball diameter (mm)} = 0.4 \times \text{minimum tubing ID} \pm 0.05 \text{ mm} \qquad \text{(Eq. 1)}$$

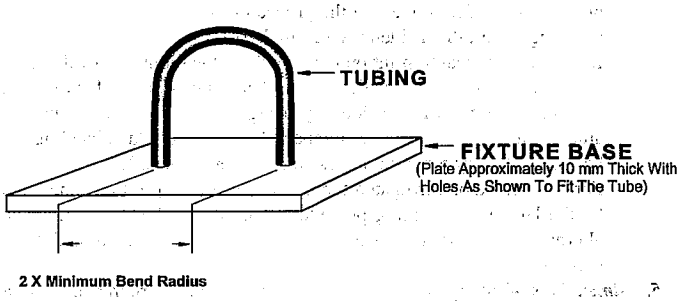

FIGURE 2—KINKING RESISTANCE TEST FIXTURE

7.3.3.1 Acceptance Criteria—Restriction of the passage of the ball constitutes a failure.

7.4 Burst Test on Kinked Tubing—Tubing shall be stabilized for 1/2 to 3 h at 23 °C. Completely bend tubing so it is kinked and two lengths of tubing on either side of kink touch along entire length. Straighten tubing completely. Repeat so tubing is kinked a total of five times at same position tubing.

7.4.1 ACCEPTANCE CRITERIA—Tubing must meet requirements of the Room Temperature Burst Test (see 7.1.2).

7.5 Resistance to Zinc Chloride—Cut tubing specimen to be tested to a length as described in the second paragraph of 7.3.3. The connectors or fittings that will be used in the burst pressure testing of 7.1 are then inserted in each end of the tubing. The tubing is then bent in a half circle and mounted onto a fixture that is similar to that shown in Figure 2. The dimensions of the fixture, spacing of the means of mounting the connectors, radius of curvature are dependent on the diameter of the tubing. Other details described in 7.3 are to be used for guidance.

When the tubing specimen (and its two connectors/fittings) is appropriately mounted in the fixture, invert it so the curved part is down and immerse the tubing specimen into a 50% (by weight) aqueous solution of zinc chloride at 23 °C for 200 h.

Depth of the immersion is very important. The entire tubing specimen must be fully immersed; however, the connectors must not be fully immersed. The zinc chloride must be in contact with the ends of the tubing, but should not be able to enter the inside of the tube through the very ends of the connectors. This simulates the exposure of the tubing ends (including the ends of each layer) to the road chemical environment. This level of immersion is to be maintained throughout the entire 200 h soaking time in the zinc chloride solution.

When the 200 h soak of the tubing specimen is completed, remove it from the solution and allow to dry for 24 h at 23 °C. Do not wipe off excess solution from any surface or the tubing ends.

7.5.1 ACCEPTANCE CRITERIA—Tubing shall show no evidence of cracking on the outside diameter, tubing ends, or that part of the inner surface that is visible from the tubing ends. Tubing must meet requirements of the Room Temperature Burst Test (see 7.1.2).

NOTE—Fresh, anhydrous zinc chloride should be used to make up a concentration of 50% (by weight) aqueous solution (specific gravity of 1.576 or a Baumé rating of 53 at 15.5 °C).

7.6 Cold Temperature Impact—The Impact Test Apparatus is pictured in Figure 3. The impact head weighs 0.912 kg ± 0.003 kg. It is in the form of bar with a diameter of 31.75 mm and its end has a spherical radius of 15.88 mm. The test apparatus allows the impact head to fall 305 mm ± 3 mm. The 305 mm ± 3 mm distance is measured from the bottom of the weight to the center of the tube specimen. When the mass is released, it must fall freely in the fixture. The maximum radius of curvature of the edge of the supporting platform is 1.3 mm. The supporting platform should be 10 mm ± 1 mm thick.

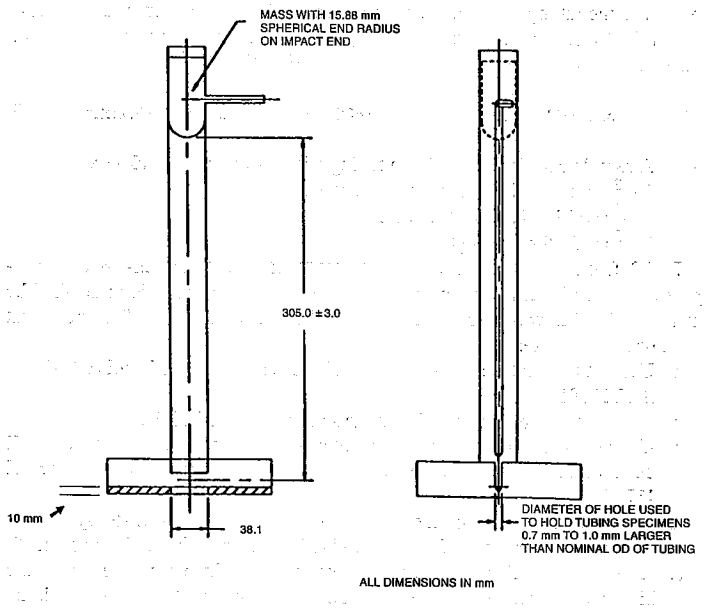

FIGURE 3—COLD IMPACT TEST FIXTURE

7.6.1 PREFERRED PROCEDURE—Expose the test samples and the impact test apparatus to –40 °C for 4 h. Place each sample in the supporting platform of the apparatus and allow the impact head to fall on it. Impact should occur with both apparatus and specimens inside the cold chamber.

7.6.2 OPTIONAL PROCEDURE—If the impact test cannot be done inside the cold chamber, the apparatus and the specimens can be removed from the chamber by the following procedure:

a. The apparatus is removed from the chamber for up to a 3 min period. During that period, impact tests of several tubing specimens can be completed. At the end of that 3 min period, the apparatus is returned to the chamber for additional temperature soak (–40 °C) of at least 25 min duration. After that additional soak at temperature, the apparatus can be removed again for an additional set of cold impact of tubing specimens (within a 3 min period). This procedure is repeated until all test specimens have been impacted properly.
b. All test specimens are kept in the cold chamber until immediately before impact in the apparatus. When a tubing specimen is removed, it must be impacted in the apparatus within 5 s of its removal from the cold temperature environment.

NOTE—The temperature of the ambient air where these impacts occur shall not be higher than 23 °C.

7.6.3 ACCEPTANCE CRITERIA—After impact of a tubing specimen, it is allowed to return to 23 °C. The tubing specimen is then subjected to Room Temperature Burst requirements of 7.1.2. All criteria of that section must be met.

7.7 Methanol Fuel Resistance

7.7.1 PROCEDURES—There are two procedures that can be followed for exposing the test specimens to methanol fuel; the preferred to follow is the recirculation method of 7.7.1.1. Test fuel for this procedure shall be CM-15 (refer to SAE J1681 for details on composition). Needs of end user may require that another test fuel be used (such as TF-2, FAMB, etc.). Therefore, a different methanol-containing test fuel may be used in this procedure but it would be only for that specific application. For purposes of comparison and unless otherwise specified for a certain situation, the test fuel shall be CM-15. Length of the tubing specimens tested shall be 0.3 m or longer. At least 5 specimens should be tested to allow subsequent testing identified in the acceptance criteria section (7.7.2).

7.7.1.1 Recirculation Method—Methanol-blend fuel should be continuously circulated through the tubing specimens for a minimum of 1000 h (approximately 42 days). The temperature of the fuel must be maintained at 40 °C. Composition of the fuel should be measured and adjusted periodically to ensure that the methanol content of the fuel is maintained at 15% ± 3% (frequency of the checking of the composition is determined primarily by the size of the liquid fuel reservoir that's used in the recirculation process). Methanol content shall be measured every 3 days after the start of test until it is established that the rate of methanol content change is less than the ±3% within a week's time. The frequency of checking methanol content can then be decreased to once per week. If these tests are done frequently and a history of how often the methanol should be checked can be substantiated from previous test specimens, then that established schedule can be utilized. Methanol content shall always be checked at least once per week. If the methanol content of the fuel goes outside of the limits, the test fuel should be replaced with a new mixture with the correct level of methanol.

7.7.1.2 Optional Method—(To be followed only if recirculation procedure is not available.)

Plug one end of tubing to be tested, then fill with the test fuel. Plug the other end of the tubing in such a manner that it can be periodically removed. Expose the filled tubing to a temperature of 40 °C for 42 days continuously. The test fuel must be replaced with fresh test fuel every 3 days.

7.7.2 ACCEPTANCE CRITERIA—After 42 days exposure to the methanol fuel at 40 °C, the tubing is then tested for cold impact resistance per 7.6. The cold soak must be started immediately after emptying the tubing of the methanol blend fuel (to avoid any drying out of the tubing). All criteria of that section must be met.

NOTE—Section 7.6 also includes the burst requirements of 7.1.2.

The tubing that was exposed to the methanol fuel shall also be tested for layer adhesion (see 7.11.2) and for electrical resistance (see 7.9.1). The acceptance criteria of those two sections must be met.

7.8 Auto-Oxidized Gasoline

7.8.1 PROCEDURES—There are two procedures that can be followed for exposing the tubing test specimens to auto-oxidated gasoline; the preferred one to follow is the recirculation method of 7.8.1.1. The auto-oxidized gasoline must be maintained at a peroxide number of 90 (for determination of peroxide number, refer to ISO 4639-3 Annex A; base fuel for auto-oxidized gasoline formulation shall be ASTM fuel C). The temperature of the test fuel shall be maintained at 40 °C. At least 5 specimens should be tested to allow for subsequent testing identified in the acceptance criteria section (7.8.2). Length of the specimens tested shall be 0.3 m or longer.

7.8.1.1 Recirculation Method—(Refer to SAE J1737 for details of procedure.)

Auto-oxidized gasoline (with the required peroxide number) should be recirculated continuously through the tubing being tested for a period of 1000 h (approximately 42 days). Composition of the fuel should be measured periodically to ensure that the peroxide number is maintained at 90 ± 5 (frequency of the

checking of the composition is determined primarily by the size of the liquid fuel reservoir that's used in the recirculation process). It is recommended that the peroxide number (P/N) be measured on the first and seventh day after the test begins. Based on the rate of change of P/N over that period of time, a schedule for frequency of measurement of P/N should be established (no less than once every 10 days, however). If the P/N goes outside the limits, the test fuel should be entirely replaced with a new mixture with the correct P/N.

7.8.1.2 Optional Method—(To be followed only if recirculation procedure is not available.)

Plug one end of the tubing specimen, then fill with auto-oxidized gasoline (with peroxide number of 90). Plug the other end of the tubing in such a manner that it can be periodically removed. Expose the filled tubing to a temperature of 40 °C for 42 days continuously. The auto-oxidized gasoline must be replaced with "fresh" auto-oxidized gasoline every 3 days in order to maintain the peroxide number at 90 ± 5.

7.8.2 ACCEPTANCE CRITERIA—After 42 days of continuous exposure to the auto-oxidized gasoline at 40 °C, the tubing specimen is then tested for cold impact resistance per 7.6. The cold soak must be started immediately after emptying the tubing of the auto-oxidized gasoline (to avoid drying out of the tubing). All criteria of that section must be met.

NOTE—Section 7.6 also includes the burst requirements of 7.1.

The tubing that was exposed to the auto-oxidized fuel shall also be tested for layer adhesion (see 7.11.2) and for electrical resistance (see 7.9.2). The acceptance criteria of those two sections must be met.

7.9 Electrical Resistance—In many liquid fuel carrying lines a certain level of conductivity is required. An acceptable conductivity level can be verified by setting a maximum allowable surface resistivity, derived from the resistance measurement procedure described in 7.9.2.

7.9.1 SAE DOCUMENT—SAE J1645 describes the situation surrounding the electrostatic charging that can exist in a fuel system. Although that report is not a specific standard, it does suggest certain guidelines in such areas as grounding, assemblies, and tubing configurations that should be followed. When developing a system to carry liquid fuel, care must be taken to consider all aspects of the system from an electrostatic charge perspective. The final system should be tested in close conjunction with the needs of the end user to insure that all necessary criteria are met.

7.9.2 SURFACE RESISTIVITY—The test apparatus consists of a resistance meter (MEG-CHECK 2100A R-meter from Associates Research Inc. or equivalent) and a set of copper pins (diameter approximately 0.1 mm larger than ID of tubing).

7.9.2.1 Test Procedure

a. All tests are conducted at 23 °C ± 2 °C and 50% ± 5% relative humidity.
b. Measure sample length. Record as 'L_o' (mm).
c. Measure inner diameter of sample. Record as 'd' (mm).
d. Insert the copper pins to full depth in ends of tube assuring a tight fit. Measure the depth of the copper pin 'a' (mm). Attach the leads to the resistance meter as shown in Figure 4.
e. Record the resistance R (ohms).
f. Calculate Equation 2:

$$\text{Surface Resistivity (ohms/sq)} = \frac{R(\pi d)}{(L_0 - 2a)} \qquad \text{(Eq. 2)}$$

g. Measure the resistance and record the associated surface resistivity of tubing specimens before any exposure testing.

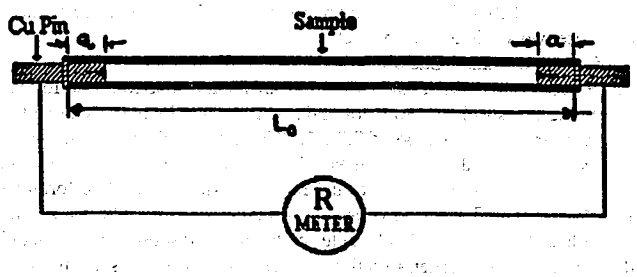

FIGURE 4—SCHEMATIC OF RESISTANCE MEASUREMENT FIXTURE

7.9.2.2 Surface resistivity (W/square) shall also be obtained from tubing samples that have been subjected to certain tests or exposures described in the specification. In each case, it is the exposure test only that is included in this section. The burst test or other subsequent procedure is not included in requirements of this section.

Section 7.4—Full Kink Procedure
Section 7.6—Cold Impact Test
Section 7.7—Methanol Fuel Exposure
Section 7.8—Sour Gasoline Exposure

For each of these four tests, the resistance of the tubing specimen is measured after the exposure by the same procedure as 7.9.2.1. The result obtained is recorded and compared to the result obtained on the same tubing specimen before the exposure test. A different tubing specimen is used in each of the exposure tests. Acceptance criteria indicated in 7.9.2.3 must be met.

7.9.2.3 Acceptance Criteria—There are two types of acceptance criteria for the level of surface resistivity level measured.

7.9.2.3.1 Surface Resistivity Level—The surface resistivity derived from measured resistance values measured on test specimens both before and after exposure testing shall not be greater than 10^6 W/square.

7.9.2.3.2 Maximum Change in Measured Surface Resistance Level—When the level of surface resistivity measured on each test specimens after exposure testing is compared to the level measured on the same test specimen before exposure testing, the maximum difference in surface resistivity between the two for each exposure test shall not be greater than a change of two orders of magnitude.

7.10 Permeation Resistance—The procedure to be followed for determining level of permeation resistance is described in SAE J1737. The test fuel to be used will depend on the requirements of the end use application. Typical comparison tests are made among various multilayer tubing constructions by use of alcohol-content fuels (CE-10 and CM-15 are most common).

Permeation is expressed in grams/(meter^2·day). It is also possible to relate that rate of permeation to the permeation that could occur in grams per day per meter of tubing (by calculating the inside circumference of the tubing that is wetted by the fuel).

7.10.1 DETERMINATION OF PERMEATION RESISTANCE—For determination of permeation resistance for use on a specific vehicle or in a specific subsystem, the test fuel can relate more closely to the specific fuel that is used in testing of whole vehicles or vehicle subsystems for compliance to emissions requirements.

Permeation resistance testing must be conducted until steady state is achieved (refer to SAE J1737). The value determined is expressed in grams/(meter^2·day). Acceptance criteria is to be determined by the end user.

It is important to realize that the permeation rate in grams/(meter^2·day) is much larger than the permeation rate per meter of tubing, because it takes many meters of the tubing to equal a square meter. In the case of 8 mm tubing with a 6 mm ID, for example, 53.05 m of tubing are required to reach a total inside surface area of 1 m^2. The calculation is shown in Equation 3:

$$1\ \text{m}^2 \text{ of tubing inside surface} = \text{circumference of the inside of tubing} \times \text{length in meters} \qquad \text{(Eq. 3)}$$

a. A sample calculation for 8 mm tubing with a 1 mm wall thickness:
$1\ \text{m}^2 = p \times (6 \times 10^{-3}\ \text{m}) \times \text{length in meters}$
$1\ \text{m}^2 = 0.01885 \times \text{length in meters}$
$1\ \text{m}^2 = 53.05\ \text{m of length}$

7.10.2 GENERAL CLASSIFICATION OF PERMEATION RESISTANCE—For purposes of general identification, the equilibrium level of permeation rate shall be measured by following the procedure described in SAE J1737. The steps that must be followed are:

a. Use test fuel that is a blend of ASTM Fuel C and 15% methanol (CM-15 by SAE J1681).
b. Use test temperature of 60 °C and test pressure of 200 kPa.
c. Units reported from the measurement shall be grams/(meter^2·day) and shall be reported as a whole number by following all the guidelines of 8.3 of SAE J1737.
d. Care must be taken that the permeation rate measured is at steady-state as defined and discussed in 3.3 of SAE J1737 (see also 7.10.3 of this document).
e. A minimum of five specimens must be tested by this procedure. After the high and low value of those five separate measurements are discarded, the average of the remaining 3 measurements shall be the number used to describe the permeation rate of the tubing being tested. The average shall be rounded off to a whole number by following the guidelines of 8.3 of SAE J1737.
f. The whole number value of permeation determined from the previous step shall be used to identify the permeation category from Table 3. That category number is the digit "P" that is marked on the tubing for identification purposes that is described in 4.4.

TABLE 3—DETERMINING CATEGORY OF PERMEATION PERFORMANCE

Category Number	Permeation Measurement of Tubing as Determined by Steps of 7.10.2 (grams/m^2·day)
1	0 - 25
2	25 - 50
3	50 - 100
4	100 - 200
5	200 - 400
6	over 400

7.10.3 TIME TO REACH EQUILIBRIUM PERMEATION RESISTANCE—When measuring permeation resistance, experience has shown that it can take several hundreds of hours to achieve steady-state or equilibrium levels. Based on experience with the test conditions and fuel indicated in 7.10.2, the following general guideline should be followed.

This time to reach equilibrium is the continuous exposure time to the identified test conditions. It is a summation of the preconditioning step and time in the permeation test unit (refer to SAE J1737, Section 7.2). If temperatures are lower than 60 °C or test fuels are "less active" than those containing methanol, the overall time will be longer than shown in Table 4.

TABLE 4—ESTIMATING TIME TO ACHIEVE EQUILIBRIUM PERMEATION MEASUREMENT

Range of Measured Permeation Resistance Level (grams/meter^{2}PDay) (M-15 Fuel @ 60 °C)	Suggested Time
0 – 25	over 1000 h
25 – 50	1000 h
50 – 100	800 h
100 – 200	600 h
200 – 400	500 h
Over 400	400 h

7.11 Layer Adhesion—When the tubing has been manufactured with 2 or more layers, those various layers must properly adhere to one another initially and after fuel exposure. (If tubing being tested is a monowall construction, then the tests of 7.11 are not necessary.)

7.11.1 INITIAL ADHESION TEST—This test is designed for straight-wall MLT. If the spiral cut test cannot be applied to the particular construction, then the adhesion test described in 7.11.2 will still apply.

7.11.1.1 Procedure—Cut a sample of tubing into a helical coil whose length is at least five times the circumference of the tubing. The width of the strip should be no less than 70% of the outer diameter of the tubing. (Figure 5 shows an example of a suitable tool for producing such a cut.) Suspend a weight from the end of the strip using an alligator clip or some other suitable means. Increase the weight until the helical coil is "unspiraled" into a flat ribbon (minimum weight is 2 kg). To aid in the unspiraling process, the weight can be turned by hand.

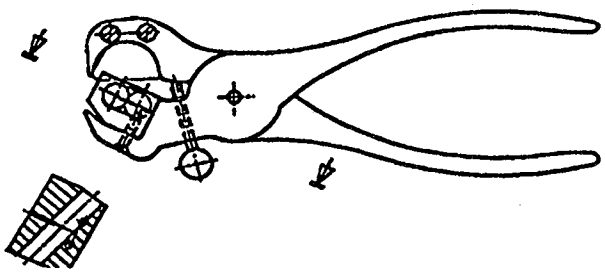

FIGURE 5—EXAMPLE OF SUITABLE TOOL FOR SPIRAL CUT ADHESION TEST

7.11.1.2 Acceptance Criteria—No visible signs of delamination should occur between layers (excluded from this is the point on the strip where the weight is attached).

7.11.2 ADHESION TEST AFTER FUEL EXPOSURE—After each of the two fuel exposure procedures described in 7.7 and 7.8, each specimen must be examined for layer adhesion.

7.11.2.1 Procedure—Tubing specimen shall be cut to length and then shall be bent into a "U" shape at the minimum bend radius (refer to 7.3 for details of length and radius). Each tubing end is then inserted into a fixture that secures the specimen in the desired bend radius and allows the specimen to be laid flat on a horizontal surface. The tubing is then cut in half lengthwise in the bend area for at least 120 degrees of the required 180 degree bend. The cut goes through both vertical portions of the tubing wall and is made parallel to the surface upon which the bent tubing is resting. The cut removes the "top half" of the tubing, leaving behind a "U-shaped" cross section of the tubing for the required length of the cut (at least 120 degrees of the 180 degree bend). Refer to Figure 6.

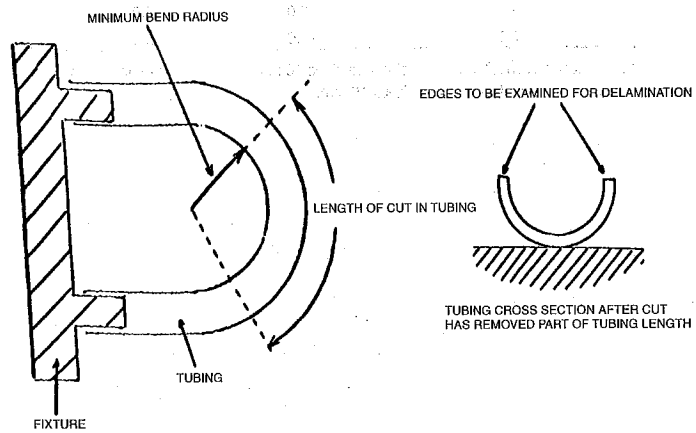

FIGURE 6—ILLUSTRATION OF PROCEDURE FOR LAYER ADHESION TEST AFTER FUEL EXPOSURE

7.11.2.2 Acceptance Criteria—Examine the exposed edges of the cut portion of the tubing while it remains in the fixture. There shall be no evidence of delamination between the layers in the area of the cut.

7.12 Tensile Strength, Elongation—This is an optional test. The acceptance criteria are to be agreed upon by producer and end user.

The procedure to be followed is described in 7.12.1 through 7.12.3. The gripping procedure that is suggested for use in the tests is described in 7.12.2.1. Other gripping fixtures/procedures may be used provided that the resulting breakage during the tensile elongation test is in the approximate center of the test specimen. If breakage occurs outside the gage length (see 7.12.2.2) the elongation test result will be considered invalid.

7.12.1 TEST METHODS SUMMARY—This test method covers tension testing of plastic fuel tubing. It follows the general practices of ISO 527. Method "A" of ISO 527 for dumbbell and straight specimens is the method choice with the following modifications listed in 7.11.2.1.

7.12.2 MODIFICATIONS TO ISO 527

7.12.2.1 Grips and Fixtures—Any grip procedure or fixture for holding the tubing may be used to conduct the elongation test described in ISO 527, as long as the resulting breakage occurs in an area of the tubing being tested that is not within 25 mm of either grip.

7.12.2.2 Gage Length and Distance Between Grips—The gage length between benchmarks shall be 50 mm ± 2 mm. An extensiometer may be used as an alternative to benchmarks. The distance between grips shall be not less than 100 mm ± 2 mm.

7.12.2.3 Crosshead Travel Speed—The crosshead travel speed shall be set at 50 mm/min ± 5 mm/min.

7.12.3 SUMMARY—The method of gripping tubing when testing in tension is critical to optimizing repeatability. The previous modifications to ISO 527 listed in 7.11.2, enhance this repeatability.

APPENDIX A

A.1 Tables A1, A2A, and A2B are listings of the various tubing sizes, wall thicknesses, and tolerances that should be used for the tubing covered in this document.

TABLE A1—TUBING DIMENSIONS (METRIC SIZES)[1]

Reference Sizes OD Dimension (mm)	ID of Tubing (mm)	Wall Thickness
5	3.0	1.0
6	4.0	1.0
8	6.0	1.0
10	8.0	1.0
12	9.0	1.5
15	12.0	1.5
18	14.0	2.0
20	16.0	2.0
22	18.0	2.0

1. Tolerances are ±0.1 mm for reference sizes 10 mm and less. For over 10 mm reference size, the tolerance is ±0.15 mm.

TABLE A2A—TUBING DIMENSIONS (INCH SIZES)—TYPICAL EXTRUDED TUBING

Reference Sizes (Nominal Tubing Diameter OD)	ID of Tubing (mm)	Wall Thickness (mm)
1/4 in (6.35 mm)	3.89 to 4.14 mm	0.98 to 1.41
5/16 in (7.93 mm)	6.20 to 6.50 mm	0.90 to 1.15
3/8 in (9.53 mm)	7.90 to 8.20 mm	0.90 to 1.15

TABLE A2B—TUBING DIMENSIONS (INCH SIZES)—MLT WITH ELASTOMERIC COATING

Reference Sizes (Nominal Tubing Diameter)	ID of Tubing Metric (mm)	ID of Tubing Decimal (in)	Wall Thickness Metric (mm)	Wall Thickness Decimal (in)
3/8 in (9.53 mm)	8.9 ± 0.3	3.50 ± 0.012	3.5 ± 0.5	0.138 ± 0.020
7/16 in (11.12 mm)	9.9 ± 0.3	0.390 ± 0.012	3.5 ± 0.5	0.138 ± 0.020
1/2 in (12.7 mm)	11.7 ± 0.3	0.460 ± 0.012	3.5 ± 0.5	0.138 ± 0.020
5/8 in (15.88 mm)	14.5 ± 0.3	0.570 ± 0.012	3.5 ± 0.5	0.138 ± 0.020