National Reporter System—United States Series

THE FEDERAL REPORTER

WITH KEY-NUMBER ANNOTATIONS

VOLUME 227

PERMANENT EDITION

CASES ARGUED AND DETERMINED
IN THE
CIRCUIT COURTS OF APPEALS AND
DISTRICT COURTS OF THE
UNITED STATES

DECEMBER, 1915—JANUARY, 1916

ST. PAUL
WEST PUBLISHING CO.
1916

(227 FED.)

This is a Key-Numbered Volume

Each syllabus paragraph in this volume is marked with the topic and Key-Number section ⟹ under which the point will eventually appear in the American Digest System.

The lawyer is thus led from that syllabus to the exact place in the Digests where we, as digest makers, have placed the other cases on the same point---*This is the Key-Number Annotation.*

JUDGES

OF THE

UNITED STATES CIRCUIT COURTS OF APPEALS AND THE DISTRICT COURTS

FIRST CIRCUIT

Hon. OLIVER WENDELL HOLMES, Circuit Justice.....Washington, D. C.
Hon. WILLIAM L. PUTNAM, Circuit Judge.....Portland, Me.
Hon. FREDERIC DODGE, Circuit Judge.....Boston, Mass.
Hon. GEO. H. BINGHAM, Circuit Judge.....Concord, N. H.
Hon. CLARENCE HALE, District Judge, Maine.....Portland, Me.
Hon. JAS. M. MORTON, Jr., District Judge, Massachusetts.....Boston, Mass.
Hon. EDGAR ALDRICH, District Judge, New Hampshire.....Littleton, N. H.
Hon. ARTHUR L. BROWN, District Judge, Rhode Island.....Providence, R. I.

SECOND CIRCUIT

Hon. CHARLES E. HUGHES, Circuit Justice.....Washington, D. C.
Hon. E. HENRY LACOMBE, Circuit Judge.....New York, N. Y.
Hon. ALFRED C. COXE, Circuit Judge.....New York, N. Y.
Hon. HENRY G. WARD, Circuit Judge.....New Haven, Conn.
Hon. HENRY WADE ROGERS, Circuit Judge.....New Haven, Conn.
Hon. EDWIN S. THOMAS, District Judge, Connecticut.....Brooklyn, N. Y.
Hon. THOMAS I. CHATFIELD, District Judge, E. D. New York.....Brooklyn, N. Y.
Hon. VAN VECHTEN VEEDER, District Judge, E. D. New York.....Norwich, N. Y.
Hon. GEORGE W. RAY, District Judge, N. D. New York.....New York, N. Y.
Hon. CHARLES M. HOUGH, District Judge, S. D. New York.....New York, N. Y.
Hon. LEARNED HAND, District Judge, S. D. New York.....New York, N. Y.
Hon. JULIUS M. MAYER, District Judge, S. D. New York.....New York, N. Y.
Hon. AUGUSTUS N. HAND, District Judge, S. D. New York.....Buffalo, N. Y.
Hon. JOHN R. HAZEL, District Judge, W. D. New York.....St. Johnsbury, Vt.
Hon. HARLAND B. HOWE, District Judge, Vermont.....

THIRD CIRCUIT

Hon. MAHLON PITNEY, Circuit Justice.....Washington, D. C.
Hon. JOSEPH BUFFINGTON, Circuit Judge.....Pittsburg, Pa.
Hon. JOHN B. McPHERSON, Circuit Judge.....Philadelphia, Pa.
Hon. VICTOR B. WOOLLEY, Circuit Judge.....Wilmington, Del.
Hon. EDWARD G. BRADFORD, District Judge, Delaware.....Wilmington, Del.
Hon. JOHN RELLSTAB, District Judge, New Jersey.....Trenton, N. J.
Hon. THOS. G. HAIGHT, District Judge, New Jersey.....Jersey City, N. J.
Hon. J. WHITAKER THOMPSON, District Judge, E. D. Pennsylvania...Philadelphia, Pa.
Hon. OLIVER B. DICKINSON, District Judge, E. D. Pennsylvania.....Philadelphia, Pa.
Hon. CHAS. B. WITMER, District Judge, M. D. Pennsylvania.....Sunbury, Pa.
Hon. CHARLES P. ORR, District Judge, W. D. Pennsylvania.....Pittsburg, Pa.
Hon. W. H. SEWARD THOMSON, District Judge, W. D. Pennsylvania.....Pittsburg, Pa.

FOURTH CIRCUIT

Hon. EDWARD D. WHITE, Circuit Justice.....Washington, D. C.
Hon. JETER C. PRITCHARD, Circuit Judge.....Asheville, N. C.
Hon. MARTIN A. KNAPP, Circuit Judge.....Washington, D. C.
Hon. CHAS. A. WOODS, Circuit Judge.....Marion, S. C.
Hon. JOHN C. ROSE, District Judge, Maryland.....Baltimore, Md.
Hon. HENRY G. CONNOR, District Judge, E. D. North Carolina.....Wilson, N. C.
Hon. JAMES E. BOYD, District Judge, W. D. North Carolina.....Greensboro, N. C.
Hon. HENRY A. MIDDLETON SMITH, District Judge, E. D. S. C.....Charleston, S. C.
Hon. JOSEPH T. JOHNSON, District Judge, W. D. S. C.[1].....Greenville, S. C.
Hon. EDMUND WADDILL, Jr., District Judge, E. D. Virginia.....Richmond, Va.
Hon. HENRY CLAY McDOWELL, District Judge, W. D. Virginia.....Lynchburg, Va.
Hon. ALSTON G. DAYTON, District Judge, N. D. West Virginia.....Philippi, W. Va.
Hon. BENJAMIN F. KELLER, District Judge, S. D. West Virginia....Charleston, W. Va.

FIFTH CIRCUIT

Hon. JOSEPH R. LAMAR, Circuit Justice[2].....Washington, D. C.
Hon. DON A. PARDEE, Circuit Judge.....Atlanta, Ga.
Hon. A. P. McCORMICK, Circuit Judge.....Waco, Tex.
Hon. RICHARD W. WALKER, Circuit Judge.....Huntsville, Ala.
Hon. HENRY D. CLAYTON, District Judge, N. and M. D. Alabama....Montgomery, Ala.
Hon. WM. I. GRUBB, District Judge, N. D. Alabama.....Birmingham, Ala.
Hon. HARRY T. TOULMIN, District Judge, S. D. Alabama.....Mobile, Ala.
Hon. WM. B. SHEPPARD, District Judge, N. D. Florida.....Pensacola, Fla.
Hon. RHYDON M. CALL, District Judge, S. D. Florida.....Jacksonville, Fla.
Hon. WILLIAM T. NEWMAN, District Judge, N. D. Georgia.....Atlanta, Ga.
Hon. EMORY SPEER, District Judge, S. D. Georgia.....Macon, Ga.
Hon. WM. WALLACE LAMBDIN, District Judge, S. D. Georgia.....Savannah, Ga.
Hon. RUFUS E. FOSTER, District Judge, E. D. Louisiana.....New Orleans, La.
Hon. ALECK BOARMAN, District Judge, W. D. Louisiana.....Shreveport, La.
Hon. HENRY C. NILES, District Judge, N. and S. D. Mississippi.....Kosciusko, Miss.
Hon. GORDON RUSSELL, District Judge, E. D. Texas.....Sherman, Tex.
Hon. EDWARD R. MEEK, District Judge, N. D. Texas.....Dallas, Tex.
Hon. WALLER T. BURNS, District Judge, S. D. Texas.....Houston, Tex.
Hon. THOMAS S. MAXEY, District Judge, W. D. Texas.....Austin, Tex.

SIXTH CIRCUIT

Hon. WILLIAM R. DAY, Circuit Justice.....Washington, D. C.
Hon. JOHN W. WARRINGTON, Circuit Judge.....Cincinnati, Ohio.
Hon. LOYAL E. KNAPPEN, Circuit Judge.....Grand Rapids, Mich.
Hon. ARTHUR C. DENISON, Circuit Judge.....Grand Rapids, Mich.
Hon. ANDREW M. J. COCHRAN, District Judge, E. D. Kentucky.....Maysville, Ky.
Hon. WALTER EVANS, District Judge, W. D. Kentucky.....Louisville, Ky.
Hon. ARTHUR J. TUTTLE, District Judge, E. D. Michigan.....Detroit, Mich.
Hon. CLARENCE W. SESSIONS, District Judge, W. D. Michigan....Grand Rapids, Mich.
Hon. JOHN M. KILLITS, District Judge, N. D. Ohio.....Toledo, Ohio.
Hon. JOHN H. CLARKE, District Judge, N. D. Ohio.....Cleveland, Ohio.
Hon. JOHN E. SATER, District Judge, S. D. Ohio.....Columbus, Ohio.
Hon. HOWARD C. HOLLISTER, District Judge, S. D. Ohio.....Cincinnati, Ohio.
Hon. EDWARD T. SANFORD, District Judge, E. and M. D. Tennessee..Knoxville, Tenn.
Hon. JOHN E. McCALL, District Judge, W. D. Tennessee.....Memphis, Tenn.

SEVENTH CIRCUIT

Hon. JAMES CLARK McREYNOLDS, Circuit Justice .....Washington, D. C.
Hon. FRANCIS E. BAKER, Circuit Judge.....Goshen, Ind.
Hon. CHRISTIAN C. KOHLSAAT, Circuit Judge.....Chicago, Ill.
Hon. JULIAN W. MACK, Circuit Judge.....Chicago, Ill.

[1] Recess appointment March 9, 1915. [2] Died January 2, 1916.

Hon. SAMUEL ALSCHULER, Circuit Judge[3].....Chicago, Ill.
Hon. KENESAW M. LANDIS, District Judge, N. D. Illinois.....Chicago, Ill.
Hon. GEORGE A. CARPENTER, District Judge, N. D. Illinois.....Chicago, Ill.
Hon. FRANCIS M. WRIGHT, District Judge, E. D. Illinois.....Urbana, Ill.
Hon. J. OTIS HUMPHREY, District Judge, S. D. Illinois.....Springfield, Ill.
Hon. ALBERT B. ANDERSON, District Judge, Indiana.....Indianapolis, Ind.
Hon. FERDINAND A. GEIGER, District Judge, E. D. Wisconsin.....Milwaukee, Wis.
Hon. ARTHUR L. SANBORN, District Judge, W. D. Wisconsin.....Madison, Wis.

EIGHTH CIRCUIT

Hon. WILLIS VAN DEVANTER, Circuit Justice.....Washington, D. C.
Hon. WALTER H. SANBORN, Circuit Judge.....St. Paul, Minn.
Hon. WILLIAM C. HOOK, Circuit Judge.....Leavenworth, Kan.
Hon. ELMER B. ADAMS, Circuit Judge.....St. Louis, Mo.
Hon. WALTER I. SMITH, Circuit Judge.....Council Bluffs, Iowa.
Hon. JOHN E. CARLAND, Circuit Judge.....Washington, D. C.
Hon. JACOB TRIEBER, District Judge, E. D. Arkansas..... Little Rock, Ark.
Hon. F. A. YOUMANS, District Judge, W. D. Arkansas.....Ft. Smith, Ark.
Hon. ROBERT E. LEWIS, District Judge, Colorado.....Denver, Colo.
Hon. HENRY THOMAS REED, District Judge, N. D. Iowa.....Cresco, Iowa.
Hon. MARTIN J. WADE, District Judge, S. D. Iowa.....Davenport, Iowa.
Hon. JOHN C. POLLOCK, District Judge, Kansas.....Kansas City, Kan.
Hon. PAGE MORRIS, District Judge, Minnesota.....Duluth, Minn.
Hon. WILBUR F. BOOTH, District Judge, Minnesota.....Minneapolis, Minn.
Hon. DAVID P. DYER, District Judge, E. D. Missouri.....St. Louis, Mo.
Hon. ARBA S. VAN VALKENBURGH, District Judge, W. D. Missouri...Kansas City, Mo.
Hon. THOMAS C. MUNGER, District Judge, Nebraska.....Lincoln, Neb.
Hon. WM. H. POPE, District Judge, New Mexico.....Santa Fé, N. M.
Hon. CHARLES F. AMIDON, District Judge, North Dakota.....Fargo, N. D.
Hon. RALPH E. CAMPBELL, District Judge, E. D. Oklahoma.....Muskogee, Okl.
Hon. JOHN H. COTTERAL, District Judge, W. D. Oklahoma.....Guthrie, Okl.
Hon. JAMES D. ELLIOTT, District Judge, South Dakota.....Sioux Falls, S. D.
Hon. TILLMAN D. JOHNSON, District Judge, Utah[4].....Ogden, Utah.
Hon. JOHN A. RINER, District Judge, Wyoming.....Cheyenne, Wyo.

NINTH CIRCUIT

Hon. JOSEPH McKENNA, Circuit Justice.....Washington, D. C.
Hon. WILLIAM B. GILBERT, Circuit Judge.....Portland, Or.
Hon. ERSKINE M. ROSS, Circuit Judge.....Los Angeles, Cal.
Hon. WM. W. MORROW, Circuit Judge.....San Francisco, Cal.
Hon. WM. H. HUNT, Circuit Judge.....Washington, D. C.
Hon. WM. H. SAWTELLE, District Judge, Arizona.....Tucson, Ariz.
Hon. BENJ. F. BLEDSOE, District Judge, S. D. California.....Los Angeles, Cal.
Hon. OSCAR A. TRIPPET, District Judge, S. D. California.....Los Angeles, Cal.
Hon. WM. C. VAN FLEET, District Judge, N. D. California.....San Francisco, Cal.
Hon. MAURICE T. DOOLING, District Judge, N. D. California.....San Francisco, Cal.
Hon. FRANK S. DIETRICH, District Judge, Idaho.....Boise, Idaho.
Hon. GEO. M. BOURQUIN, District Judge, Montana .....Butte, Mont.
Hon. EDWARD S. FARRINGTON, District Judge, Nevada.....Carson City, Nev.
Hon. CHARLES E. WOLVERTON, District Judge, Oregon.....Portland, Or.
Hon. ROBERT S. BEAN, District Judge, Oregon.....Portland, Or.
Hon. FRANK H. RUDKIN, District Judge, E. D. Washington.....Spokane, Wash.
Hon. EDWARD E. CUSHMAN, District Judge, W. D. Washington.....Seattle, Wash.
Hon. JEREMIAH NETERER, District Judge, W. D. Washington.....Seattle, Wash.

[3] Recess appointment August 16, 1915. [4] Recess appointment November 2, 1915.

*

CASES REPORTED

Page

Abercrombie & Fitch Co., Baldwin v. (D. C.) 455
A. C. Layman Mach. Co., F. F. Slocomb & Co. v. (D. C.) 94
Adamson, Gilliland v. (C. C. A.) 93
Adler Bros. & Co., McCarthy v. (D. C.) ... 630
Adler-Goldman Commission Co., Williams v. (C. C. A.) 374
Alaskan, The (C. C. A.) 594
Alcazar, The (D. C.) 633
Aldrich, C. F. Stromeyer Co. v. (D. C.) ... 960
Alice State Bank v. Houston Pasture Co. (C. C. A.) 1015
Allaun v. Glen Brook Coal Co. (C. C. A.) 835
Alpha Portland Cement Co. v. Shirk (C. C. A.) 966
American Bank & Trust Co. v. Coppard (C. C. A.) 597
American Brake Shoe & Foundry Co., Hoadley Brake Shoe Co. v. (C. C. A.) ... 90
American Metal Stamping Co., Sagendorph v. (D. C.) 942
American Plate Glass Co., Hitchcock v. (C. C. A.) 227
American Rotary Valve Co., Vacuum Cleaner Co. v. (D. C.) 998
American Sheet & Tin Plate Co. v. Winzeler (D. C.) 321
Ames v. Goldfield Merger Mines Co. (D. C.) 292
Atchison, T. & S. F. R. Co. v. United States & Mexican Trust Co. (C. C. A.) 1015
Atlanta & W. P. R. Co., Western Union Tel. Co. v. (D. C.) 465
Atlantic Coast Line R. Co. v. Winn (C. C. A.) 50
Atwater, In re (D. C.) 511
Automatic Mach. Co., Parker v. (D. C.) 449

Baber v. United States (C. C. A.) 1015
Backus v. Yep Kim Yuen (C. C. A.) 848
Baldwin v. Abercrombie & Fitch Co. (D. C.) 455
Baldwin Locomotive Works, H. K. Porter Co. v. (C. C. A.) 216
Bank of Sully, Iowa, In re (C. C. A.) 346
Bank of Waynesboro v. Ryan (C. C. A.) 570
Bantlin Co. v. United States Hame Co. (C. C. A.) 876
Barber, Tilden v. (D. C.) 1010
Barnes & Tucker Coal Co. v. Vozar (C. C. A.) 25
Barney & Berry, Thomson Electric Welding Co. v. (C. C. A.) 428
Beach, Union Trust Co. v. (C. C. A.) 36
Belsteel Co. v. Lorain Steel Co. (C. C. A.) 240
Billings v. Charles Millar & Son Co. (D. C.) 185
Birdsall v. Germain Co. (D. C.) 953
Blakeslee & Co., United States Slicing Mach. Co. v. (C. C. A.) 442

Page

Blumenthal v. Strat (C. C. A.) 843
Bole, Wilson & Willard Mfg. Co. v. (C. C. A.) 607
Bond Bottle Sealing Co., Crown Cork & Seal Co. of Baltimore City v. (C. C. A.) 51
Bradley Co., Collins v. (D. C.) 199
Branham, Coca-Cola Co. v. (C. C. A.) 1016
Britton Lumber Co., Stuart v. (C. C. A.) · 49
Brooklyn Rapid Transit Co., Cheatham Electric Switching Device Co. v. (D. C.) 613
Brown Commercial Car Co., In re (C. C. A.) 387
Brown Commercial Car Co. v. Continental Motor Mfg. Co. (C. C. A.) 387
Bruns, Ryder v. (C. C. A.) 1021
Buffalo Specialty Co. v. Van Cleef (C. C. A.) 391
Burrowes Co., Stuart v. (C. C. A.) 50
Butler v. United States (C. C. A.) 1015
Butler & Co., Isaac McLean Sons Co. v. (D. C.) 325
Butte Duluth Min. Co., In re (D. C.) 334
Byrd v. Hall (C. C. A.) 537

Campbell, In re (C. C. A.) 49
Campbell, In re (C. C. A.) 50
Campbell, In re (C. C. A.) 840
Carpenter v. McDonald (C. C. A.) 1015
Carter Car Co. v. McIntosh (C. C. A.) ... 1015
Center, Elliott Mach. Co. v. (D. C.) 124
Central Trust Co. of New York v. Duluth (C. C. A.) 1016
Central Trust Co. of New York v. Equitable Trust Co. of New York (C. C. A.) ... 1016
C. F. Stromeyer Co. v. Aldrich (D. C.) 960
Chapman v. Chemical Bldg. Co. (C. C. A.) 1016
Charles Millar & Son Co., Billings v. (D. C.) 185
Charter, United States v. (D. C.) 331
Cheatham Electric Switching Device Co. v. Brooklyn Rapid Transit Co. (D. C.) 613
Chemical Bldg. Co., Chapman v. (C. C. A.) 1016
Chicago Great Western R. Co. v. LeValley (C. C. A.) 1016
Chin Him, Ex parte (D. C.) 131
Chin Sing v. United States (C. C. A.) 397
Church, Irvine v. (D. C.) 252
City Council of Augusta v. Timmerman (D. C.) 171
City of Duluth, Central Trust Co. of New York v. (C. C. A.) 1016
City of Texarkana, Ark., v. Texarkana Water Corp. (C. C. A.) 1016
Cline, Hand v. (C. C. A.) 1017
Closser v. Strawn (D. C.) 139
Coca-Cola Co. v. Branham (C. C. A.) 1016
Coffield Motor Washer Co., Wayne Mfg. Co. v. (C. C. A.) 987
Cohn, In re (C. C. A.) 843

Page
Collins v. Bradley Co. (D. C.) 199
Colorado Min. Co., Wilson v., two cases (C. C. A.) 721
Colorado Smelting & Mining Co. v. Lupold (C. C. A.) 1017
Colorado Smelting & Mining Co. v. Wiley (C. C. A.) 1017
Columbia Digger Co. v. Sparks (C. C. A.) 780
Commercial State Bank v. Moore (C. C. A.) 19
Consolidated Contract Co. v. Hassam Pav. Co. (C. C. A.) 436
Continental Motor Mfg. Co., Brown Commercial Car Co. v. (C. C. A.) 387
Coppard, American Bank & Trust Co. v. (C. C. A.) 597
Cottrell v. Sperry & Hutchinson Co. (D. C.) 256
Courson v. O'Connor (C. C. A.) 890
Cream of Wheat Co., Great Atlantic & Pacific Tea Co. v. (C. C. A.) 46
Crescent Mill. Co. v. H. N. Strait Mfg. Co. (C. C. A.) 804
Cross Paper Feeder Co., United Printing Machinery Co. v. (C. C. A.) 600
Crown Cork & Seal Co. of Baltimore City v. Bond Bottle Sealing Co. (C. C. A.) ... 51
Curtis v. Walpole Tire & Rubber Co. (D. C.) 698

Dallas County, Yost v. (C. C. A.) 1023
Debell, United States v. (C. C. A.) 760
Debell, United States v. (C. C. A.) 771
Debell, United States v. (C. C. A.) 775
De Mayo Coaling Co. v. Michener Stowage Co. (D. C.) 895
Desnoyers Shoe Co., In re (C. C. A.) 16
Desnoyers Shoe Co., In re (C. C. A.) 401
Detroit Body Co., Union Trust Co. v. (C. C. A.) 1022
Detroit Motor & Machine Co., In re (C. C. A.) 1017
Detwiler v. United States (C. C. A.) 1017
Dorrance v. Dorrance (D. C.) 679
Dundon v. Pedersen (D. C.) 120
Duntley, In re (C. C. A.) 381
Duntley, Patten v. (C. C. A.) 381
Dwinsk, The (D. C.) 958

E. C. Stearns & Co., Underwood Typewriter Co. v. (C. C. A.) 74
E. C. Stearns & Co., Underwood Typewriter Co. v. (C. C. A.) 1022
Elgin, J. & E. R. Co. v. United States (C. C. A.) 411
Elliott Mach. Co. v. Center (D. C.) 124
Emmett Irr. Dist., Thompson v. (C. C. A.) 560
Energetic, The (D. C.) 958
Epsom, The (D. C.) 158
Equitable Trust Co. of New York, Central Trust Co. of New York v. (C. C. A.) 1016
Equitable Trust Co. of New York, National Bank of Commerce in St. Louis v. (C. C. A.) 526
Eshelman, Southern Pac. Co. v. (D. C.) ... 928
Eskew, Sugg v. (C. C. A.) 548
Estes v. United States (C. C. A.) 818
E. T. Burrowes Co., Stuart v. (C. C. A.) .. 50

Farish v. State Banking Board of Oklahoma (C. C. A.) 1017
Farley & Co., In re (C. C. A.) 378

Page
Ferguson v. Omaha & S. W. R. Co. (C. C. A.) 513
F. F. Slocomb & Co. v. A. C. Layman Mach. Co. (D. C.) 94
Fielder v. United States (C. C. A.) 832
First Nat. Bank of Woodbury v. West (C. C. A.) 981
First State Bank of Kerrville, Tex., v. Lowry (C. C. A.) 846
Fischer v. Star Co. (D. C.) 955
Fishel v. Fishel (C. C. A.) 850
Florida Nat. Bank of Gainesville, Fla., v. Merchants' & Farmers' Bank of Claxton, Ga. (D. C.) 714
Florida R. Co., Sauer v. (D. C.) 718
Ft. Dearborn Nat. Bank of Chicago v. Gallagher (C. C. A.) 378
Fox Typewriter Co., Underwood Typewriter Co. v. (C. C. A.) 446
Freeman v. Jackson (D. C.) 688
Freeman v. United States (C. C. A.) 732

Gallagher, Ft. Dearborn Nat. Bank of Chicago v. (C. C. A.) 378
George, Toland's Ex'rs v. (C. C. A.) 30
Georgia Railroad & Banking Co., Western Union Tel. Co. v. (D. C.) 276
Germain Co., Birdsall v. (D. C.) 953
Gibbs, Price v. (C. C. A.) 1021
Gildner v. Hall (D. C.) 704
Gilliland v. Adamson (C. C. A.) 93
Glen Brook Coal Co., Allaun v. (C. C. A.) 835
Goldfield Merger Mines Co., Ames v. (D. C.) 292
Gradwell, United States v. (D. C.) 243
Grand Rapids Chair Co., Veneer Machinery Co. v. (C. C. A.) 419
Grand Trunk Ry. of Canada, Wiley v. (D. C.) 127
Gray, Seligman v. (C. C. A.) 417
Great Atlantic & Pacific Tea Co. v. Cream of Wheat Co. (C. C. A.) 46
Greene, Sieg v. (C. C. A.) 41
Griffin Wheel Co. v. United States & Mexican Trust Co. (C. C. A.) 1017
Griggs, In re (C. C. A.) 795
Grover, United States v. (D. C.) 181
Gruppe v. Kingsley (D. C.) 933
G. S. Blakeslee & Co., United States Slicing Mach. Co. v. (C. C. A.) 442

Hall, Byrd v. (C. C. A.) 537
Hall, Gildner v. (D. C.) 704
Hall Mfg. Co. v. Western Steel & Iron Works (C. C. A.) 588
Hand v. Cline (C. C. A.) 1017
Hanish v. United States (C. C. A.) 584
Hargreaves, York v. (C. C. A.) 12
Hart v. United States (C. C. A.) 1018
Hartford Life Ins. Co., of Hartford, Conn., Wheeler v. (C. C. A.) 369
Hartford & N. Y. Transp. Co. v. Lehigh & Wilkes-Barre Coal Co. (C. C. A.) 1019
Hassam Pav. Co., Consolidated Contract Co. v. (C. C. A.) 436
H. B. Marienelli v. United Booking Offices of America (D. C.) 165
Hendershot, Midland Valley R. Co. v. (C. C. A.) 1020

Page
Herold, Public Service Electric Co. v. (D. C.) 486
Herold, Public Service Electric Co. v. (D. C.) 491
Herold, Public Service Gas Co. v. (D. C.) 496
Herold, Public Service R. Co. v. (D. C.) 490
Herold, Public Service R. Co. v. (D. C.) 560
Heublein v. Wight (D. C.) 667
Hill, Wheat v. (C. C. A.) 984
Hitchcock v. American Plate Glass Co. (C. C. A.) 227
H. K. Porter Co. v. Baldwin Locomotive Works (C. C. A.) 216
H. N. Strait Mfg. Co., Crescent Mill. Co. v. (C. C. A.) 804
Hoadley Brake Shoe Co. v. American Brake Shoe & Foundry Co. (C. C. A.) 90
Hoag, In re (D. C.) 478
Hoag, In re (D. C.) 480
Hoey Ay Sing v. United States (C. C. A.) 209
Hoss v. United States, two cases (C. C. A.)1018
Houston Pasture Co., Alice State Bank v. (C. C. A.) 1015

Inhabitants of City of Trenton, Trenton & Mercer County Traction Corp. v. (D. C.) 502
International & G. N. R. Co. v. United States & Mexican Trust Co. (C. C. A.)1018
Iowa Portland Cement Co. v. Lamandola (C. C. A.) 823
Iowa Washing Mach. Co. v. Montgomery Ward & Co. (D. C.) 1004
Irvine v. Church (D. C.) 252
Isaac McLean Sons Co. v. William S. Butler & So. (D. C.) 325
Isbell v. United States (C. C. A.) 788
I. S. Remsen Mfg. Co., In re (D. C.) 207

Jackson, Freeman v. (D. C.) 688
Jacobs & Davies v. Wright (C. C. A.) 1018
Jamison Bros. & Co., In re (C. C. A.) 30
Jarvis, Portland Terminal Co. v. (C. C. A.) 8
Jenkins Bros. v. Kelly & Jones Co. (C. C. A.) 211
J. H. White Mfg. Co. v. Shapiro (D. C.) 957
John E. Mehrer, The (D. C.) 149
John W. Farley & Co., In re (C. C. A.) 378
Jones Millinery Co., In re (C. C. A.) 597
J. Q. Wheeler & Son, In re (C. C. A.) 846
Julius J. Bantlin Co. v. United States Hame Co. (C. C. A.) 876

Kelly & Jones Co., Jenkins Bros. v. (C. C. A.) 211
Keno Supply Co. v. North American Chemical Co. (C. C. A.) 63
Kesler, McClintic-Marshall Const. Co. v. (C. C. A.) 1020
Keystone Coal & Coke Co. v. Petrovich (C. C. A.) 43
King Choo v. United States (C. C. A.)...1018
Kingsley, Gruppe v. (D. C.) 933

L. Adler Bros. & Co., McCarthy v. (D. C.) 630
Lamandola, Iowa Portland Cement Co. v. (C. C. A.) 823
Lamar, Taylor & Riley Drug Co., In re (D. C.) 177
Lamar v. United States (C. C. A.) 1019

Page
Lamont, Corliss & Co., Singer v. (C. C. A.)1022
Lamont, Corliss & Co., Singer v. (D. C.) 462
Law King v. United States (C. C. A.) 1018
Layman Mach. Co., F. F. Slocomb & Co. v. (D. C.) 94
Lee, Locke v. (C. C. A.) 1019
Lee Wilson & Co. v. United States (C. C. A.) 827
Lehigh & Wilkes-Barre Coal Co. v. Hartford & N. Y. Transp. Co. (C. C. A.) 1019
Leles, United States v. (D. C.) 189
LeValley, Chicago Great Western R. Co. v. (C. C. A.) 1016
Levy, In re (D. C.) 1011
L. E. Waterman Co. v. Standard Drug Co. (C. C. A.) 1019
Liphart, In re (D. C.) 135
Llewellyn & Doyle, National Chemical Co. v. (D. C.) 629
Locke v. Lee (C. C. A.) 1019
Lorain Steel Co., Belsteel Co. v. (C. C. A.) 240
Louisville & N. R. Co. v. United States (D. C.) 258
Louisville & N. R. Co. v. United States (D. C.) 273
Lowry, First State Bank of Kerrville, Tex., v. (C. C. A.) 846
Lupold, Colorado Smelting & Mining Co. v. (C. C. A.) 1017
Luyster, United States v. (C. C. A.) 1023
Lyons v. Richards (C. C. A.) 1019

McArthur Bros. Co., Vaughan v. (C. C. A.) 364
MacArthur Concrete Pile & Foundation Co., Simplex Concrete Piling Co. v. (D. C.) 107
McCarthy v. L. Adler Bros. & Co. (D. C.) 630
McClintic-Marshall Const. Co. v. Kesler (C. C. A.) 1020
McDonald, Carpenter v. (C. C. A.) 1015
MacDonnell v. Voorhees Rubber Mfg. Co. (D. C.) 898
McDuffie v. United States (C. C. A.) 961
Maciel, St. Louis Southwestern R. Co. of Texas v., two cases (C. C. A.) 1021
McIntosh, Carter Car Co. v. (C. C. A.) ..1015
McKone, Scottish Union & National Ins. Co. v. (C. C. A.) 813
McLean Sons Co. v. William S. Butler & Co. (D. C.) 325
McMillan v. United States (C. C. A.) 1020
Macy v. Roedenbeck (C. C. A.) 346
Marconi Wireless Tel. Co. of America, Nikola Tesla Co. v. (D. C.) 903
Marconi Wireless Tel. Co. of America v. Simon (D. C.) 906
Marienelli v. United Booking Offices of America (D. C.) 165
Mark, Stone-Ordean-Wells Co. v. (C. C. A.) 975
Marrin, United States v. (D. C.) 314
Megginson v. United States, two cases (C. C. A.) 1020
Mehrer, The John E. (D. C.) 149
Merchants' & Farmers' Bank of Claxton, Ga., Florida Nat. Bank of Gainesville, Fla., v. (D. C.) 714
Michener Stowage Co., De Mayo Coaling Co. v. (D. C.) 895

Page
Midland Valley R. Co. v. Hendershot (C. C. A.) 1020
Millar & Son Co., Billings v. (D. C.).... 185
Moffett, Public Service R. Co. v. (D. C.) 494
Montgomery Ward & Co., Iowa Washing Mach. Co. v. (D. C.)....1004
Moore, Commercial State Bank v. (C. C. A.) 19
Mowinckel, New York & Bermudez Co. v. (D. C.).... 950

National Bank of Commerce in St. Louis v. Equitable Trust Co. of New York (C. C. A.).... 526
National Chemical Co. v. Llewellyn & Doyle (D. C.).... 629
National Equipment Co., Panoulias v., four cases (D. C.)....1008
National Metal Molding Co. v. Tubular Woven Fabric Co. (C. C. A.).... 884
National Newspapers' Ass'n, United Press Ass'ns v. (D. C.).... 193
Neuhardt, North Memphis Sav. Bank v. (C. C. A.)....1021
New York City R. Co., Pennsylvania Steel Co. v., five cases (C. C. A.)....1021
New York, C. & St. L. R. Co. v. Niebel (C. C. A.)....1020
New York & Bermudez Co. v. Mowinckel (D. C.).... 950
Niebel, New York, C. & St. L. R. Co. v. (C. C. A.)....1020
Nikola Tesla Co. v. Marconi Wireless Tel. Co. of America (D. C.).... 903
Nonpareil Consol. Copper Co., In re (C. C. A.) 575
North American Chemical Co. v. Keno Supply Co., two cases (C. C. A.).... 63
North Memphis Sav. Bank v. Neuhardt (C. C. A.)....1021

O'Connor, Courson v. (C. C. A.).... 890
Omaha & S. W. R. Co., Ferguson v. (C. C. A.).... 513

Palermo Land & Water Co. v. Railroad Commission of California (D. C.).... 708
Panoulias v. National Equipment Co., four cases (D. C.)....1008
Parker v. Automatic Mach. Co. (D. C.).... 449
Patten v. Duntley (C. C. A.).... 381
Patton v. Public Service R. Co. (C. C. A.) 810
Pechin, In re (C. C. A.).... 853
Pedersen, Dundon v. (D. C.).... 120
Pennsylvania R. Co. v. United States, two cases (D. C.).... 911
Pennsylvania Steel Co. v. New York City R. Co., five cases (C. C. A.)....1021
Petrovich, Keystone Coal & Coke Co. v. (C. C. A.).... 43
Philadelphia Rubber Works Co. v. Portage Rubber Co. (D. C.).... 623
Philadelphia & R. R. Co., United States v. (D. C.).... 206
Portage Rubber Co., Philadelphia Rubber Works Co. v. (D. C.).... 623
Porter v. Stuart (C. C. A.).... 840
Porter Co. v. Baldwin Locomotive Works (C. C. A.).... 216
Portland Terminal Co. v. Jarvis (C. C. A.) 8

Page
Prentis, Ung Bak Foon v. (C. C. A.).... 406
Price v. Gibbs (C. C. A.)....1021
Public Service Electric Co. v. Herold (D. C.) 486
Public Service Electric Co. v. Herold (D. C.) 491
Public Service Gas Co. v. Herold (D. C.).. 496
Public Service R. Co. v. Herold (D. C.).... 490
Public Service R. Co. v. Herold (D. C.).... 500
Public Service R. Co. v. Moffett (D. C.)....494
Public Service R. Co., Patton v. (C. C. A.) 810

Quickstep, The (D. C.).... 255
Quinnesec Iron Min. Co., Ross v. (C. C. A.) 337

Railroad Commission of California, Palermo Land & Water Co. v. (D. C.).... 708
Reeves, In re (D. C.).... 711
Reiter, Standard Scale & Supply Co. v. (C. C. A.).... 414
Remsen Mfg. Co., In re (D. C.).... 207
Richards, Lyons v. (C. C. A.)....1019
Roberts, In re (D. C.).... 177
Robinson, Second Ave. R. Co. in City of New York, In re v. (C. C. A.)....1021
Rochester, The (D. C.).... 203
Roedenbeck, Macy v. (C. C. A.).... 346
Ross v. Quinnesec Iron Min. Co. (C. C. A.) 337
Rose v. United States (C. C. A.).... 357
Rubin, United States v. (D. C.).... 938
Rudebeck v. Sanderson (C. C. A.).... 575
Ryan, Bank of Waynesboro v. (C. C. A.) 570
Ryder v. Bruns (C. C. A.)....1021

Sabin, Scandinavian-American Bank v. (C. C. A.).... 579
Sagendorph v. American Metal Stamping Co. (D. C.).... 942
St. Louis Southwestern R. Co. of Texas v. Maciel, two cases (C. C. A.)....1021
Salt's Textile Mfg. Co. v. Tingue Mfg. Co. (D. C.) 115
Samuels, Webb v. (D. C.).... 948
Sanderson, Rudebeck v. (C. C. A.).... 575
Sangamon Loan & Trust Co., United Shoe Machinery Co. v. (C. C. A.).... 16
Sangamon Loan & Trust Co. v. United Shoe Machinery Co. (C. C. A.).... 401
Santa Maria, The (D. C.).... 149
Sauer v. Florida R. Co. (D. C.).... 718
Scaife & Sons Co., Williams v. (D. C.)... 922
Scandinavian-American Bank v. Sabin (C. C. A.).... 579
Scottish Union & National Ins. Co. v. McKone (C. C. A.).... 813
Second Ave. R. Co. in City of New York, In re v. Robinson (C. C. A.)....1021
Seligman v. Gray (C. C. A.).... 417
Shapiro, J. H. White Mfg. Co. v. (D. C.) 957
Shirk, Alpha Portland Cement Co. v. (C. C. A.).... 966
Sibray v. United States (C. C. A.).... 1
Sieg v. Greene (C. C. A.).... 41
Silberstein, In re (C. C. A.)....1021
Simon, Marconi Wireless Tel. Co. of America v. (D. C.).... 906
Simplex Concrete Piling Co. v. MacArthur Concrete Pile & Foundation Co. (D. C.) 107

Page
Simpson v. Western Hardware & Metal Co. (D. C.) 304
Singer v. Lamont, Corliss & Co. (C. C. A.) 1022
Singer v. Lamont, Corliss & Co. (D. C.) 462
Singer Mfg. Co., Union Special Mach. Co. v. (C. C. A.) 858
Slocomb & Co. v. A. C. Layman Mach. Co. (D. C.) 94
Smart v. Wright (C. C. A.) 84
Smith v. Thornburgh (C. C. A.) 1022
Sondheim, In re (C. C. A.) 579
Southern Pac. Co. v. Eshelman (D. C.) .. 928
Sparks, Columbia Digger Co. v. (C. C. A.) 780
Sperry & Hutchinson Co., Cottrell v. (D. C.) 256
Spring v. Webb (D. C.) 481
Standard Drug Co., L. E. Waterman Co. v. (C. C. A.) 1019
Standard Scale & Supply Co. v. Reiter (C. C. A.) 414
Star Co., Fischer v. (D. C.) 955
Star Co., Wheeler Syndicate v. (D. C.) .. 955
Star Hame Mfg. Co. v. United States Hame Co. (C. C. A.) 876
State Banking Board of Oklahoma v. Farish (C. C. A.) 1017
Stearns & Co., Underwood Typewriter Co. v. (C. C. A.) 74
Stearns & Co., Underwood Typewriter Co. v. (C. C. A.) 1022
Stone-Ordean-Wells Co. v. Mark (C. C. A.) 975
Stout v. United States (C. C. A.) 799
Strait Mfg. Co., Crescent Mill. Co. v. (C. C. A.) 804
Strat, Blumenthal v. (C. C. A.) 843
Strawn, Closser v. (D. C.) 139
Stromeyer Co. v. Aldrich (D. C.) 960
Stuart v. Britton Lumber Co. (C. C. A.) 49
Stuart v. E. T. Burrowes Co. (C. C. A.) 50
Stuart, Porter v. (C. C. A.) 840
Success Min. Co., Weniger v. (C. C. A.) .. 548
Sugg v. Eskew (C. C. A.) 548

Tacoma Ornamental Iron Works, In re (D. C.) 304
Tancrel, In re (D. C.) 329
Territory of New Mexico, Walker v. (C. C. A.) 851
Texarkana Water Corp., City of Texarkana, Ark., v. (C. C. A.) 1016
Thompson, In re (C. C. A.) 981
Thompson v. Emmett Irr. Dist. (C. C. A.) 560
Thompson v. Travis (C. C. A.) 1022
Thomson Electric Welding Co. v. Barney & Berry (C. C. A.) 428
Thornburgh, Smith v. (C. C. A.) 1022
Thullen v. Triumph Electric Co. (C. C. A.) 837
Tilden v. Barber (D. C.) 1010
Timmerman, City Council of Augusta v. (D. C.) 171
Tingue Mfg. Co., Salt's Textile Mfg. Co. v. (D. C.) 115
Toland's Ex'rs v. George (C. C. A.) 30
Tomljanovich v. Victor American Fuel Co. (D. C.) 951
Travis, Thompson v. (C. C. A.) 1022
Trenton & Mercer County Traction Corp. v. Trenton (D. C.) 502
Triumph Electric Co., Thullen v. (C. C. A.) 837

Page
Tubular Woven Fabric Co., National Metal Molding Co. v. (C. C. A.) 884

Underwood Typewriter Co. v. E. C. Stearns & Co. (C. C. A.) 74
Underwood Typewriter Co. v. E. C. Stearns & Co. (C. C. A.) 1022
Underwood Typewriter Co. v. Fox Typewriter Co. (C. C. A.) 446
Ung Bak Foon v. Prentis (C. C. A.) 406
Union Special Mach. Co. v. Singer Mfg. Co. (C. C. A.) 858
Union Trust Co. v. Beach (C. C. A.) .. 36
Union Trust Co. v. Detroit Body Co. (C. C. A.) 1022
United Booking Offices of America, H. B. Marienelli v. (D. C.) 165
United Press Ass'ns v. National Newspapers' Ass'n (D. C.) 193
United Printing Machinery Co. v. Cross Paper Feeder Co. (C. C. A.) 600
United Shoe Machinery Co. v. Sangamon Loan & Trust Co. (C. C. A.) 16
United Shoe Machinery Co., Sangamon Loan & Trust Co. v. (C. C. A.) 401
United Shoe Machinery Co., United States v. (D. C.) 507
United States, Baber v. (C. C. A.) 1015
United States, Butler v. (C. C. A.) 1015
United States v. Charter (D. C.) 331
United States, Chin Sing v. (C .C. A.) ... 397
United States v. Debell (C. C. A.) 760
United States v. Debell (C. C. A.) 771
United States v. Debell (C. C. A.) 775
United States, Detwiler v. (C. C. A.) 1017
United States, Elgin, J. & E. R. Co. v. (C. C. A.) 411
United States, Estes v. (C. C. A.) 818
United States, Fielder v. (C. C. A.) 832
United States, Freeman v. (C. C. A.) 732
United States v. Gradwell (D. C.) 243
United States v. Grover (D. C.) 181
United States, Hanish v. (C. C. A.) 584
United States, Hart v. (C. C. A.) 1018
United States, Hoey Ay Sing v. (C. C. A.) 209
United States, Hoss v., two cases (C. C. A.) 1018
United States, Isbell v. (C. C. A.) 788
United States, King Choo v. (C. C. A.) .. 1018
United States, Lamar v. (C. C. A.) 1019
United States, Law King v. (C. C. A.) .. 1018
United States, Lee Wilson & Co. v. (C. C. A.) 827
United States v. Leles (D. C.) 189
United States, Louisville & N. R. Co. v. (D. C.) 258
United States, Louisville & N. R. Co. v. (D. C.) 273
United States v. Luyster (C. C. A.) 1023
United States, McDuffie v. (C. C. A.) 961
United States, McMillan v. (C. C. A.) ... 1020
United States v. Marrin (D. C.) 314
United States, Megginson v., two cases (C. C. A.) 1020
United States, Pennsylvania R. Co. v., two cases (D. C.) 911
United States v. Philadelphia & R. R. Co. (D. C.) 206
United States, Rose v. (C. C. A.) 357
United States v. Rubin (D. C.) 938
United States, Sibray v. (C. C. A.) 1

Page
United States, Stout v. (C. C. A.) 799
United States v. United Shoe Machinery Co. (D. C.) 507
United States, Wilson v. (C. C. A.) 1023
United States, Wright v. (C. C. A.) 855
United States Hame Co., Julius J. Bantlin Co. v. (C. C. A.) 876
United States Hame Co., Star Hame Mfg. Co. v. (C. C. A.) 876
United States Slicing Mach. Co. v. G. S. Blakeslee & Co. (C. C. A.) 442
United States & Mexican Trust Co., Atchison, T. & S. F. R. Co. v. (C. C. A.) ..1015
United States & Mexican Trust Co., Griffin Wheel Co. v. (C. C. A.) 1017
United States & Mexican Trust Co., International & G. N. R. Co. v. (C. C. A.)1018

Vacuum Cleaner Co. v. American Rotary Valve Co. (D. C.) 998
Van Cleef, Buffalo Specialty Co. v. (C. C. A.) 391
Vaughan v. McArthur Bros. Co. (C. C. A.) 364
Veneer Machinery Co. v. Grand Rapids Chair Co. (C. C. A.) 419
Victor American Fuel Co., Tomljanovich v. (D. C.) 951
Voorhees Rubber Mfg. Co., MacDonnell v. (D. C.) 898
Vozar, Barnes & Tucker Coal Co. v. (C. C. A.) 25

Walker v. New Mexico (C. C. A.) 851
Walpole Tire & Rubber Co., Curtis v. (D. C.) 698
Waterman Co. v. Standard Drug Co. (C. C. A.) 1019
Watts v. Weston (C. C. A.) 1023
Wayne Mfg. Co. v. Coffield Motor Washer Co. (C. C. A.) 987
Webb v. Samuels (D. C.) 948
Webb, Spring v. (D. C.) 481
Weniger v. Success Min. Co. (C. C. A.) ... 548
West, First Nat. Bank of Woodbury v. (C. C. A.) 981

Page
Western Hardware & Metal Co., Simpson v. (D. C.) 304
Western Steel & Iron Works, Hall Mfg. Co. v. (C. C. A.) 588
Western Union Tel. Co. v. Atlanta & W. P. R. Co. (D. C.) 465
Western Union Tel. Co. v. Georgia Railroad & Banking Co. (D. C.) 276
Weston, Watts v. (C. C. A.) 1023
Wheat v. Hill (C. C. A.) 984
Wheeler v. Hartford Life Ins. Co., of Hartford, Conn. (C. C. A.) 369
Wheeler Syndicate v. Star Co. (D. C.) ... 955
Wheeler & Son, In re (C. C. A.) 846
White Mfg. Co. v. Shapiro (D. C.) 957
Wight, Heublein v. (D. C.) 667
Wiley, Colorado Smelting & Mining Co. v. (C. C. A.) 1017
Wiley v. Grand Trunk Ry. of Canada (D. C.) 127
William B. Scaife & Sons Co., Williams v. (D. C.) 922
Williams v. Adler-Goldman Commission Co. (C. C. A.) 374
Williams v. William B. Scaife & Sons Co. (D. C.) 922
William S. Butler & Co., Isaac McLean Sons Co. v. (D. C.) 325
Wilson v. Colorado Min. Co., two cases (C. C. A.) 721
Wilson v. United States (C. C. A.) 1023
Wilson & Co. v. United States (C. C. A.) 827
Wilson & Willard Mfg. Co. v. Bole (C. C. A.) 607
Winn, Atlantic Coast Line R. Co. v. (C. C. A.) 50
Winzeler, American Sheet & Tin Plate Co. v. (D. C.) 321
Wong Yee Toon, Ex parte (D. C.) 247
Wright, Jacobs & Davies v. (C. C. A.) ..1018
Wright, Smart v. (C. C. A.) 84
Wright v. United States (C. C. A.) 855

Yep Kim Yuen, Backus v. (C. C. A.) 848
York v. Hargreaves (C. C. A.) 12
Yost v. Dallas County (C. C. A.) 1023

†

CASES

ARGUED AND DETERMINED

IN THE

UNITED STATES CIRCUIT COURTS OF APPEALS AND THE DISTRICT COURTS

SIBRAY, Immigrant Inspector, et al. v. UNITED STATES ex rel. YEE YOK YEE.

(Circuit Court of Appeals, Third Circuit. November 3, 1915.)

No. 1999.

1. HABEAS CORPUS ⚷4—NATURE AND SCOPE OF PROCEEDING.
   A habeas corpus proceeding cannot be made to perform the function of a writ of error, but only to examine into the power and authority of the court to act, and not the correctness of its conclusions.
   [Ed. Note.—For other cases, see Habeas Corpus, Cent. Dig. § 4; Dec. Dig. ⚷4.]

2. ALIENS ⚷54—PROCEEDINGS FOR DEPORTATION—REVIEW BY COURTS.
   The action of immigration officials in ordering the deportation of aliens under Immigration Act Feb. 20, 1907, c. 1134, §§ 20, 21, 34 Stat. 904, 905 (Comp. St. 1913, §§ 4269, 4270), is reviewable by the courts only so far as to determine whether they acted within the scope of their authority and the fairness of their proceedings.
   [Ed. Note.—For other cases, see Aliens, Cent. Dig. § 112; Dec. Dig. ⚷54.]

In Error to the District Court of the United States for the Western District of Pennsylvania; W. H. Seward Thomson, Judge.

Habeas corpus on petition of Yee Yok Yee, next friend and on behalf of Yee Kong, against W. W. Sibray, Immigrant Inspector, and others. Writ granted, and defendant brings error. Reversed.

The following is the opinon of the District Judge:

This is a writ of habeas corpus, issued on the petition of Yee Yok Yee, next friend and on behalf of Yee Kong, who is confined in the Allegheny county jail. The facts of the case, as they appear in this record and as disclosed by the testimony, are as follows:

Yee Kong was born in China, and at the age of 20 years arrived in the United States at the port of San Francisco, Cal., on the steamship Siberia,

---

⚷For other cases see same topic & KEY-NUMBER in all Key-Numbered Digests & Indexes

landing on October 31, 1913. On his entry a certificate was issued to him by the immigration officer in charge in the following form:

"Name, Yee Kong. "Description.
"Age, 20. Height, 5 ft. 5 in.
"Occupation, student, San Francisco, Cal.
"Admitted as son of official, 13013/6-8 S. S. Siberia, October 31st, 1913.
"[This is followed with some marks of identification.]
"Issued at the port of San Francisco, Cal., this 28th day of November, 1913.
"[Seal] Samuel W. Backus,
"Immigration Official in Charge."

On the face of the certificate is a photograph of the alien. On the reverse side it is certified that the person named and described on the reverse side has been regularly admitted to the United States as of the status indicated, whereof satisfactory proof has been submitted.

About 14 months later, to wit, in January, 1915, the defendant was arrested and brought before the United States commissioner, charged with being a Chinese laborer unlawfully within the United States. On February 2, 1915, said case being called before the commissioner, the same was withdrawn by the representatives of the government. In the meantime, on January 21, 1915, a warrant was issued for the arrest of Yee Kong on the ground that he has been found in the United States in violation of section 6 of the Chinese Exclusion Act of May 5, 1892, c. 60, 27 Stat. 25, as amended by the Act of November 3, 1893, c. 14, § 1, 28 Stat. 7 (Comp. St. 1913, § 4320), being a Chinese laborer not in possession of a certificate of residence. A hearing was had before L. B. Spaun, examining inspector, and on submitting the proofs taken the Acting Commissioner General found that the alien is in the United States in violation of law, and a warrant for his deportation was issued on April 16, 1915. In the meantime the alien, unable to give the bond required, has been incarcerated in the Allegheny county jail.

It seems to me, from the records and proofs before me, that the rights and liberties of this young Oriental have been flagrantly disregarded and violated. His deportation is ordered on the ground that he is a Chinese laborer within the United States without a certificate of residence. This is the sole ground for which he was arrested, for which he was tried, and for which he is ordered deported. Now upon what, if any, legal proof is this order based? Assuming, for the present, that the government has shown that the alien is a Chinaman doing labor within the United States, and that this showing shifts the burden of proof upon him to show that he is lawfully within the country, the production of his certificate of identity, which was offered and is a part of this record, certainly shifts the burden of proof back again upon the government to show that, notwithstanding this fact, he is still unlawfully within the country. The certificate sets forth that the alien has been regularly admitted to the United States as of the status indicated therein and that satisfactory proof thereof has been admitted. The status indicated in the certificate is that of a student, son of an official, and the testimony in the record on the part of the alien shows that he is the son of Yee Yok Yan, who was president of one of the Six Companies in San Francisco. This makes for him a prima facie case. Such a certificate is not to be treated as a mere delusion, a false passport subject to be dishonored at any time at the caprice of any official of the government. It was said in United States v. Quan Wah (D. C.) 214 Fed. 462:

"Nor can the fact that the burden of proof to show right to be in the United States is thrown upon the Chinaman necessitate his further showing that the action of the authorities who decided he had the right to enter was correct, unless the evidence shows that his entry was fraudulently obtained. Liu Hop Fong v. United States, 209 U. S. 453 [28 Sup. Ct. 576, 52 L. Ed. 888]. The decision of his right to enter was presumptively correct, and, unless the United States shows persuasively to the contrary, the mere certificate of admission is sufficient. United States v. Ju Toy, 198 U. S. 253 [25 Sup. Ct. 644, 49 L. Ed. 1040]; Fok Young Yo v. United States, 185 U. S. 296 [22 Sup. Ct. 686,

46 L. Ed. 917]; Lem Moon Sing v. United States, 158 U. S. 538 [15 Sup. Ct. 967, 39 L. Ed. 1082]."

The presumption arising from the certificate that the alien was lawfully admitted to the United States must be overcome by some lawful proceeding sustained by competent testimony. What is the cause of his deportation? The warrant of arrest and the warrant of deportation sets forth as follows:

"Yee Kong, who landed at the port of San Francisco, California, ex S. S. Siberia, on the 31st of October, 1913, is subject to be taken into custody and returned to the country whence he came, under section 21 of the Immigration Act, approved February 20, 1907, being subject to deportation under the provisions of a law of the United States, to wit, the Chinese Exclusion Laws, for the following among other reasons: That he has been found within the United States in violation of section 6 of the Chinese Exclusion Act of May 5, 1892, as amended by the Act of November 3, 1893, being a Chinese laborer not in possession of a certificate of residence."

Turning to section 6 of the act referred to, we find that it provides as follows:

"And it shall be the duty of all Chinese laborers within the limits of the United States, who were entitled to remain in the United States before the passage of the act to which this is an amendment, to apply to the collector of internal revenue of their respective districts within six months after the passage of this act for a certificate of residence; and any Chinese laborer within the * * * United States, who shall neglect, fail or refuse to comply with the provisions of this act and the act to which this is an amendment, or who, after the expiration of said six months, shall be found within the jurisdiction of the United States without such certificate of residence, shall be deemed and adjudged to be unlawfully within the United States."

In other words, his deportation is based on the proposition that he is a Chinese laborer without a certificate of residence.

The *importation* of Chinese laborers is the thing forbidden by the act of Congress. At the time of the passage of the act referred to, Chinese laborers in the United States were allowed to remain simply by registering in accordance with the provisions of the act referred to, and only those who failed to so register were subject to deportation. It follows, also, as of course, that those who came afterwards as Chinese laborers, and were found within the country, were subject to deportation. They had shifted upon them by the act the burden of proof to show their right to remain and failing in this their deportation followed. In United States v. Quan Wah, supra, the court aptly said:

"This case raises two questions, one of which has previously been decided, viz., whether, upon credible testimony that the Chinaman entered the United States in the exempt class, he is liable to deportation if he becomes a laborer thereafter; and, second, whether doubt cast upon his real status when entering is a failure on his part to show that he has a right to remain. Both these questions must be answered in favor of the Chinese person. As has been decided in the case of United States v. Lee You Wing [D. C.] 208 Fed. 166, affirmed February 17, 1914, 211 Fed. 939 [128 C. C. A. 437], the importation or the entry of Chinese laborers into the United States is the thing forbidden by the statute. As to a Chinese then in the United States, only those who remained without proper registration at the time of the former registration law, and who were laborers at the time of the passage of that law, were subject to deportation for their subsequent status. Tom Hong v. United States, 193 U. S. 517 [24 Sup. Ct. 517, 48 L. Ed. 772]."

This act does not apply, and was never intended to apply, to Chinese in the United States under the exempted class. As to them, they are admitted, not as laborers, but as belonging to other vocations of life. Such aliens were at no time entitled to registration, and it would be an anomaly in procedure to admit an alien as a member of the exempted class and then deport him because at a later date it was alleged he had become a member of the excluded class.

We believe it to be the law that where, at the time of the passage of the act referred to, a Chinese person was in the United States lawfully, and not

entitled to registration as a laborer, that he is not subject to deportation though he subsequently become a laborer. United States v. Louie Juen [D. C.] 128 Fed. 522; United States v. Leo Won Tong [D. C.] 132 Fed. 190; United States v. Seid Bow [D. C.] 139 Fed. 56.

In the case of United States v. Foo Duck [D. C.] 163 Fed. 440, affirmed by the Circuit Court of Appeals, 172 Fed. 856, 97 C. C. A. 204, it was held that a Chinese alien admitted into the United States as the minor son of a resident merchant may not be deported for the sole reason that after attaining his majority he has worked as a laborer.

If it was claimed by the government that the alien here was admitted to the United States through misrepresentation or fraud, those facts should have been averred so that he would have been given a full opportunity to meet them. But this proceeding was not based on any such charge. Being convinced that the order of deportation is illegal and unjust, in view of the proceedings instituted against him for that purpose, the petition must be sustained, and the relator discharged and it is so ordered.

E. Lowry Humes, U. S. Dist. Atty., and Daniel S. Horn, Asst. U. S. Dist. Atty., both of Pittsburgh, Pa., for plaintiff in error.

Lowrie C. Barton, of Pittsburgh, Pa., for defendant in error.

Before BUFFINGTON, McPHERSON, and WOOLLEY, Circuit Judges.

McPHERSON, Circuit Judge. Yee Kong, who arrived at San Francisco on October 31, was allowed to enter the country and was given the following certificate of identity, issued under section 19 of the Rules adopted by the Department of Labor to govern the admission of Chinese:

"Description.

"Name, Yee Kong.

"Age, 20. Height, 5 ft. 5 in.

"Occupation, student, San Francisco, Cal.

"Admitted as son of official, 13013/6–8 S. S. Siberia, October 31st, 1913.

"[This is followed with some marks of identification.]

"Issued at the port of San Francisco, Cal., this 28th day of November, 1913.

"[Seal.] Samuel Backus,

"Immigration Official in Charge."

On the back of the paper the following is printed:

"The United States of America.

"Certificate of Identity.

"Issued in Conformity with a Regulation of the Department of Commerce and Labor, Adopted March 19, 1909.

"This is to certify that the person named and described on the reverse side hereof has been regularly admitted to the United States as of the status indicated, whereof satisfactory proof has been submitted. This certificate is not transferable and is granted solely for the identification and protection of said Chinese person so long as his status remains unchanged, to insure the attainment of which object an accurate description of said person is written on the reverse side hereof, and his photographic likeness is attached with his name written partly across, and the official seal of the United States immigration officer signing this certificate impressed partly over, said photograph."

This certificate of "identity" is not to be confounded with the certificate of "residence," provided for and regulated by earlier statutes on the subject of Chinese laborers. The certificate of identity rests upon departmental regulations, and is a convenient instrument of evi-

dence for certain purposes only. On January 19, 1915, the alien (who had come to Pittsburgh several months before) was taken into custody on the charge of being a laborer unlawfully in the United States. This proceeding, which was before a United States commissioner and was under the Exclusion Acts, was abandoned on February 2; the federal authorities having meanwhile obtained a warrant from the Department of Labor under sections 20 and 21 of the Immigration Act of 1907. This change of procedure was within the Department's right. Both remedies were available, as the Supreme Court decided in U. S. v. Wong You, 223 U. S. 67, 32 Sup. Ct. 195, 56 L. Ed. 354; that case holding that the Immigration Act applies to Chinese laborers illegally coming to this country notwithstanding the special statutes relating to their exclusion. The court said:

"By the language of the act any alien that enters the country unlawfully may be summarily deported by order of the Secretary of Commerce and Labor at any time within three years. It seems to us unwarranted to except the Chinese from this liability because there is an earlier more cumbrous proceeding which this partially overlaps. The existence of the earlier laws only indicates the special solicitude of the government to limit the entrance of Chinese. It is the very reverse of a reason for denying to the government a better remedy against them alone of all the world, now that one has been created in general terms."

Witnesses were heard before the examining inspector, and the full record of the proceeding was forwarded to Washington, where the Department ordered the deportation of the alien on the ground that:

"He has been found within the United States in violation of section 6 of the Chinese Exclusion Act of May 5, 1892, as amended by the Act of November 3, 1893, being a Chinese laborer not in possession of a certificate of residence."

As he was confined in the Allegheny county jail, a writ of habeas corpus was sued out, and he was discharged for reasons that will appear in the opinion of the District Judge reported in the statement to this case. No attack was made on the warrant of deportation. The grounds on which the alien's liberty was sought were these: (1) Lack of jurisdiction in the Department to hear the case at all or to issue the warrant; (2) unfairness and abuse of discretion in the proceedings; (3) the alien's asserted right to remain after admittance as a student, even if he had become a laborer; (4) failure of the competent evidence to prove that he had become a laborer; (5) failure of the evidence to justify the order of deportation.

[1] We think the District Court went too far in considering the evidence and deciding what weight it should properly receive. The scope of a writ of habeas corpus is restricted. As was said in Harlan v. McGourin, 218 U. S. 445, 31 Sup. Ct. 46, 54 L. Ed. 1101, 21 Ann. Cas. 849:

"It is the settled doctrine of this court, often affirmed, that the writ of habeas corpus cannot be used for the purpose of proceedings in error, and that the jurisdiction under that writ is confined to an examination of the record, with a view to determining whether the person restrained of his liberty is detained without authority of law [citing cases]."

And on page 448 of 218 U. S., on page 47 of 31 Sup. Ct. (54 L. Ed. 1101, 21 Ann. Cas. 849), referring to the case then under consideration:

"The attack is thus not upon the jurisdiction and authority of the court (below) to proceed to investigate and determine the truth of the charge, but upon the sufficiency of the evidence to show the guilt of the accused. This has never been held to be within the province of a writ of habeas corpus. Upon habeas corpus the court examines only the power and authority of the court to act, not the correctness of its conclusions."

The Supreme Court again said, in Re Gregory, 219 U. S. 213, 31 Sup. Ct. 143, 55 L. Ed. 184:

"A habeas corpus proceeding cannot be made to perform the function of a writ of error and we are not concerned with the question whether the information was sufficient, or whether the acts set forth in the agreed statement constituted a crime—that is to say, whether the court properly applied the law, if it be found that the court had jurisdiction to try the issues and to render the judgment."

[2] And in U. S. v. Rodgers (C. C. A. 3d Cir.) 191 Fed. 970, 972, 974, 112 C. C. A. 382, 384, 386, this court decided under the Immigration Act now in question that it could not review and set aside a decision of the immigration officials, although upon the record the court might or would have reached a different conclusion. Judge Gray said:

"This court has had occasion heretofore to consider the power and authority of the United States, as an attribute of its sovereignty, to either prohibit or regulate the immigration of aliens, and the policy adopted by the government in its exercise. Rodgers v. U. S. ex rel. Cachigan, 157 Fed. 381, 85 C. C. A. 79, and the cases there cited. This power and authority is plenary, and is coextensive with any danger or exigency which, in the view of Congress, may demand its exercise. Aliens are clothed with no original or inherent rights of entry into this country. They may be excluded altogether, or, if permitted to come, come only subject to the conditions and pursuant to the regulations which Congress may prescribe. The Congress of the United States has dealt with this matter of immigration by a succession of statutes, in all of which summary hearings before ministerial officers are provided for, upon whose quasi judicial findings of the facts the law has made the exclusion of aliens to depend. It cannot be, and never has been, doubted that Congress may choose such agencies as it pleases to carry out whatever policy or rule of exclusion it may adopt, and that so long as such agencies do not transcend the limits of the authority and discretion reposed in them, their judgment is not open to challenge."

"We are not at liberty to set aside such determination, because on the record we think we might or would have reached a different conclusion. We have only to find that the inspectors acted within the scope of their authority, and that the integrity of their proceedings is not impeached. We have no jurisdiction to correct their mistakes, if any, in finding as a fact that all the relators belonged to classes which * * * are excluded from admission into the United States."

It is thus apparent that as the Department of Labor had undoubted jurisdiction to inquire whether Yee Kong was lawfully within the United States when he was taken into custody, and as its decision upon the merits of this question was not subject to review, the court below was not justified in considering and passing upon the evidence as if the case were before it on appeal under the earlier statutes relating to Chinese persons.

But, although a court is bound by the findings of fact made by the immigration officials in such an inquiry, nevertheless it may still in-

quire on habeas corpus into the fairness of the proceeding. In Loh Wah Suey v. Backus, 225 U. S. 468, 32 Sup. Ct. 735, 56 L. Ed. 1165, a recent statement to this effect may be found:

"A series of decisions in this court has settled that such hearings before executive officers may be made conclusive when fairly conducted. In order to successfully attack by judicial proceedings the conclusions and orders made upon such hearings it must be shown that the proceedings were manifestly unfair, that the action of the executive officers was such as to prevent a fair investigation or that there was a manifest abuse of the discretion committed to them by the statute. In other cases the order of the executive officers within the authority of the statute is final. United States v. Ju Toy, 198 U. S. 253 [25 Sup. Ct. 644, 49 L. Ed. 1040]; Chin Yow v. United States, 208 U. S. 8 [28 Sup. Ct. 201, 52 L. Ed. 369]; Tang Tun v. Edsell, 223 U. S. 673 [32 Sup. Ct. 359, 56 L. Ed. 606]."

After a careful examination of the record before us we are unable to find that Yee Kong was deprived of any fundamental right, or that the order of deportation was made without evidence tending to prove that he was a laborer unlawfully within the country. The burden was on him to prove his right to be here (U. S. v. Hom Lim [C. C. A. 2d Cir.] 223 Fed. 520, — C. C. A. —; Ng Jin v. U. S., 223 Fed. 426, — C. C. A. —), and on this point his certificate of identity was not conclusive, but was merely one item of relevant evidence (Lew Quen Wo v. U. S. [C. C. A. 9th Cir.] 184 Fed. 685, 106 C. C. A. 639). Testimony tending to show that he was not a student, but a laborer, was offered, and we have nothing to do with its weight. It is true the proceeding was not conducted in all respects as if a trial in court had been in progress, but this was not necessary. The act of 1907 contemplates a summary investigation, and not a judicial trial, and while an alien's right to be heard must be respected, and the discretion of the officials must not be abused, the formalities of procedure and the rules governing the admissibility of evidence have been much relaxed. U. S. v. Uhl (C. C. A. 2d Cir.) 215 Fed. 573, 131 C. C. A. 641; Choy Gum v. Backus (C. C. A. 9th Cir.) 223 Fed. 492, — C. C. A. —. We do not find anything fatally erroneous in the present record. The alien had counsel from the beginning, and had the opportunity to call such witnesses as he wished or was able to produce. The act does not provide for process to compel the appearance of witnesses (Loh Wah Suey v. Backus, 225 U. S. 460, 32 Sup. Ct. 734, 56 L. Ed. 1165), and both parties were therefore obliged to rely on their attendance without compulsion. After a further hearing on March 6 the alien's counsel stated:

"We have nothing further at present, and our case may be considered closed, unless you take more testimony; in that event I desire to see it, and may want to offer more evidence."

Whereupon it was "agreed that if any further testimony is taken Attorney Barton should be furnished with a copy and be permitted to interview additional witnesses." Such testimony was taken early in April, and (except one affidavit) all of it was taken in the presence of the alien. His counsel was not present, but a full copy was furnished him in accordance with the agreement, and he made no offer to call any witnesses in reply. Neither does he allege that the testimony

laid before the Department is false in any essential particular; practically the sole ground of attack is that the Department should have come to a different conclusion, and this ground, we repeat, was not open in the court below, and is not open here. We need not notice two or three objections of minor importance.

The order appealed from is reversed, with instructions to remand the alien.

PORTLAND TERMINAL CO. v. JARVIS.

(Circuit Court of Appeals, First Circuit. September 29, 1915.)

No. 1110.

1. MASTER AND SERVANT ⟹113—PERSONAL INJURY—NEGLIGENCE—RAILROADS—LOW BRIDGE.

If passage of a train, containing tall cars, beneath a bridge was not reasonably safe, under all the circumstances, for employés engaged in moving it, the railroad company might be negligent in permitting such passage, though height and construction of the bridge had been established by public authority before it became owner of the road.

[Ed. Note.—For other cases, see Master and Servant, Cent. Dig. §§ 213, 224–227; Dec. Dig. ⟹113.]

2. MASTER AND SERVANT ⟹286—PERSONAL INJURY—NEGLIGENCE—QUESTION FOR JURY.

Evidence in action for injury to a railroad employé, while acting as yard conductor, in moving, under orders, on a dark, stormy night, a freight train between points in a yard, by being thrown from the tall rear car by a bridge, *held* to make a question for the jury whether the master was reasonably bound to anticipate his presence on top of the car at such place, and had knowledge regarding the car, material to his safety, which he could not reasonably have been supposed to possess, and which it ought to have communicated to him.

[Ed. Note.—For other cases, see Master and Servant, Cent. Dig. §§ 1001, 1006, 1008, 1010–1015, 1017–1033, 1036–1042, 1044, 1046–1050; Dec. Dig. ⟹286.]

3. MASTER AND SERVANT ⟹288—PERSONAL INJURY—ASSUMPTION OF RISK—QUESTION FOR JURY.

Evidence, in an action for injury to a railroad employé by being thrown from the tall rear car by a bridge, while acting as yard conductor, in taking, under orders, on a dark, stormy night, a freight train between points in the yard, *held* to make a question for the jury whether the danger was a risk incident to his employment, obvious to him if he had exercised ordinary care, and therefore assumed by him.

[Ed. Note.—For other cases, see Master and Servant, Cent. Dig. §§ 1068–1088; Dec. Dig. ⟹288.

Assumption of risk incident to employment, see note to Chesapeake & O. R. Co. v. Hennessey, 38 C. C. A. 314.]

4. MASTER AND SERVANT ⟹204—PERSONAL INJURY—ASSUMPTION OF RISK—EMPLOYERS' LIABILITY ACT.

Under Employers' Liability Act April 22, 1908, c. 149, 35 Stat. 65 (Comp. St. 1913, §§ 8657–8665), a railroad employé does not assume risk of injury from negligence of a fellow servant in not excluding a tall car from the train, or in not cautioning him regarding its height.

[Ed. Note.—For other cases, see Master and Servant, Cent. Dig. §§ 544–546; Dec. Dig. ⟹204.]

---

5. MASTER AND SERVANT ⟹228—PERSONAL INJURY—CONTRIBUTORY NEGLIGENCE—EMPLOYERS' LIABILITY ACT.

Under the federal Employers' Liability Act, contributory negligence of an injured railroad employé will not bar recovery by him, but, at most, is matter for consideration by the jury in assessing his damages.

[Ed. Note.—For other cases, see Master and Servant, Cent. Dig. §§ 670, 671; Dec. Dig. ⟹228.]

In Error to the District Court of the United States for the District of Maine; Clarence Hale, Judge.

Action by Frank R. Jarvis against the Portland Terminal Company. Judgment for plaintiff, and defendant brings error. Affirmed.

Joseph Symonds, of Portland, Me. (Symonds, Snow, Cook & Hutchinson, of Portland, Me., on the brief), for plaintiff in error.

Robert Whitehouse, of Portland, Me. (Irving E. Vernon and Woodman & Whitehouse, all of Portland, Me., on the brief), for defendant in error

Before PUTNAM, DODGE, and BINGHAM, Circuit Judges.

DODGE, Circuit Judge Jarvis, the defendant in error, recovered judgment in the District Court against the Portland Terminal Company, plaintiff in error (hereinafter called defendant), for personal injuries sustained on April 13, 1913, while in the defendant's employ. The defendant was and is a common carrier by railroad, engaged in interstate commerce, and Jarvis' suit was brought under the federal Employers' Liability Act (35 Stat. 65).

The only error assigned is the refusal of the District Court, at the trial, to direct a verdict for the defendant upon all the evidence.

Jarvis, when hurt, was acting as "yard conductor," and was engaged, by order of the defendant's yardmaster, in moving a train of freight cars from one point to another in the defendant's yard. It was between 8 and 9 o'clock of a dark, foggy, and rainy evening. The defendant's tracks on which the train was moving passed under a bridge called the Danforth Street bridge. Jarvis was sitting on the top of the last car in the train. He struck the bridge when the car passed beneath it, and was thrown from the car to the ground.

Before it reached the bridge, the car had passed under the usual "tell tales" guarding it, and, when he felt these strike him, Jarvis had thrown himself flat on his back across the top of the car; but the top of the car was not far enough below the bridge to let him go under without striking it, even in that position.

[1] In construction, location, and height above the track, the bridge stood at the time precisely as it stood at the time of an order duly passed in 1909 by the State Railroad Commission, approving its construction and location, and imposing the obligation of maintaining it as then located and constructed upon the defendant's predecessor. But we are unable to hold, as the defendant contends, that because the height and condition of the bridge had been thus established, independently of it, by public authority in 1909, no fault can thereafter be attributed to it for want of sufficient height above the tracks, or for any-

thing else appertaining to said bridge. If passage beneath the bridge was not reasonably safe, under all the circumstances, for employés engaged in moving such a train or such a car as here in question, the defendant might still be negligent in permitting such passage. Boston & Maine R. R. v. Brown (decided by this court December 17, 1914) 218 Fed. 625, 627, 134 C. C. A. 383.

On the uncontradicted evidence, the danger to employés on a car such as that from which Jarvis was thrown, in passing under the bridge in question, was much greater than would have been the case with freight cars of the average dimensions. Its running board was 14 feet 9½ inches above the track. The exact height of the bridge above the track did not appear. There was testimony from the defendant's yardmaster that a car 15 feet 8 inches high could go underneath it; but, if so, the margin of clearance in such a case must have been extremely narrow, in view of the uncontradicted testimony that the bridge threw Jarvis, lying on his back, from the top of a car only 10½ inches lower. No safe passage under the bridge, on the top of that car, could have been possible in any posture. It was undisputed that the car was about 2 feet higher than the average freight car, and about 2½ feet higher than the car next ahead of it in the train. On a car 2 feet, or even 2½ feet, lower, no one could pass under the bridge in a standing posture, or even sitting upright; and it appeared that the usual posture adopted to get under the bridge had been sitting, stooping down, and bending the head.

[2] Safe passage under the bridge on top of the car in question being thus impossible, the question is whether or not the evidence was sufficient for a finding that the defendant was negligent, as the declaration alleged, in failing to warn Jarvis of the danger when it ordered him to take the train through the bridge. It gave him no such warning, and whether it was bound to do so or not depends upon the question whether or not it was reasonably bound to anticipate his presence on the top of the car at the time the dangerous bridge was reached.

The orders given him did not necessarily require him to be there; and, as has been said, there were lower cars in the train upon which he would not have incurred the same danger. The defendant contends that the dangers of being on top of the car when it went under the bridge were as plainly obvious to him as to any one else, that it had no reason to suppose him likely to be there unless warned, and therefore no duty to warn him against being there.

It was undisputed that Jarvis had been employed in the defendant's yard, either as brakeman or conductor on freight trains, for more than a year, during which period he had passed on such trains under the same bridge by night as well as by day, quite frequently as brakeman, and sometimes, but not so often, as conductor. He was also aware that freight cars received at the yard varied in height; and this car had been standing in the yard, where he could have seen it, since March 29. He had also, after receiving orders to move the train as above on the evening of his accident, passed along it with a lantern, observing the cars included in it, the tags on them, and their couplings, before he climbed to the top of this car at its rear end and signaled to start the

train. With the aid of his lantern he might, of course, have seen the difference in height between this car and the one it followed, notwithstanding the darkness, had he directed his attention to the matter. But it also appeared that the defendant had inspectors, required by rule to be familiar with the clearances of all bridges, and not to let cars go forward so loaded as to be damaged by striking them. The inspectors were under orders to pass only cars not exceeding 15 feet in height, and to report all exceeding that limit as too high, in order that they might be set aside and not permitted to attempt passage under the bridges. It had been the practice to inspect all cars for the above purpose immediately on their arrival at the yard. Although two weeks had passed since the arrival of this car in the yard, and although it had a brake staff rising to 15 feet 1 inch above the track, so that it ought, according to the above orders, to have been reported as too high and set aside, this had never been done. That the height of the cars was examined by the car inspectors before trains were made up, Jarvis testified that he knew, but it did not appear that he knew the limit of height which had been fixed for cars which would be included in the train.

Besides the men on the engine, Jarvis and two brakemen were the only employés engaged in running this train. The jury might have concluded that they were obliged to be on the top of some car in the train, it not appearing that there were any positions not on the tops of cars which they could have occupied. One brakeman Jarvis had stationed forward near the engineer, the other was with him on the rear end of the last car. They were there, as he testified, to perform the duty of looking out for the rear end of the train. There was nothing to show, and the jury was not obliged to find, that this duty could have been as well performed from a position on the roof of some car in the train other than the rear car. Except that there were cars safer in being not so high, the evidence showed, at any rate, no reason why he should have selected any other car.

It did not appear that Jarvis had anything to do with making up the train, or knew what cars were to be or had been included in it, or had seen the train after it was made up before he went to it with his lantern to take charge of it in pursuance of the orders given him as above. If the task then imposed upon him had been otherwise the same, but to be performed in broad daylight, with full opportunity to observe for himself the height of the rear car before he mounted it, and to compare its height with that of the other cars and with the height of the bridge during the approach of the train to the bridge, it might have been said that there was nothing calling upon the defendant to foresee, in view of Jarvis' previous experience and knowledge, that he might place himself on the dangerous rear car or stay there until it went under the bridge, and therefore no ground for finding that it was negligent in failing to warn him against doing so. But, from the circumstances disclosed by the evidence, we cannot hold this to have been the only conclusion reasonably permissible. The rear car being one which the defendant ought, according to its own rules, to have kept out of the train as too high, and being too high in any case to let any one go through the bridge safely on its top, and being also, as the jury might have found,

the one upon which Jarvis would be likely to take his place unless prevented by knowledge that it was too high, we cannot hold that the court below erred in leaving it to the jury to say whether or not the defendant acted with due regard for Jarvis' safety in leaving him to find out for himself that the car was too high, from such examination as he could have been expected to make, with the aid of his lantern, of cars with the selection of which he had had nothing to do, on a dark, foggy, and rainy evening, after receiving his orders to move the train and before proceeding to obey them. Whether or not there was knowledge regarding the car in question, material to his safety, in the defendant's possession at the time, which he could not reasonably have been supposed to possess, notwithstanding the time during which the car had been standing where he might have seen it, and which knowledge, under the circumstances, ought to have been communicated to him, was, in our opinion, a proper question for the jury.

[3, 4] The same considerations prevent us from holding that it was error to refuse the ruling requested that on the evidence the danger from the bridge was a risk incident to Jarvis' employment, obvious to him if he had exercised ordinary care, and therefore assumed by him. If the failure to exclude the car in question from the train, or the omission to caution him regarding its height, were due to negligence on the part of his fellow employés, the defendant cannot say, under the act, that the risk of injury from these causes was assumed.

[5] Nothing in the evidence tending to show contributory negligence on Jarvis' part could have aided the defendant's motion for a directed verdict in its favor, because, under the act, such negligence would not have barred him from recovery, but would have been, at most, matter for the jury to consider in assessing his damages. We are unable to hold that the court erred in submitting the case to the jury instead of granting the defendant's motion, and no other error is assigned.

The judgment of the District Court is affirmed, with interest, and the defendant in error recovers his costs on appeal.

PUTNAM, Circuit Judge. On the hearing of this case I was reminded that I advised the Boston & Maine Railroad, of which the Portland Terminal Company is the successor, in reference to the street crossings on the Fore River front of that railroad, of which that in question here was one, and therefore I concluded that I was precluded from taking any part in the judgment in this case.

YORK et al. v. HARGREAVES.

(Circuit Court of Appeals, Eighth Circuit. September 28, 1915.)

No. 4416.

VENDOR AND PURCHASER ⚷244—BONA FIDE PURCHASER—UNRECORDED DEED.

Evidence *held* to support a finding by the trial court that persons who procured a quitclaim deed to an interest in ore land were acting as agents for defendant, to whom they immediately conveyed, that they had knowledge that their grantor had previously conveyed a part of his interest

⚷For other cases see same topic & KEY-NUMBER in all Key-Numbered Digests & Indexes

in the land to complainant by a deed which had not been recorded, and that defendant therefore took subject to such deed.

[Ed. Note.—For other cases, see Vendor and Purchaser, Cent. Dig. §§ 609–611; Dec. Dig. ⟹244.]

Appeal from the District Court of the United States for the District of Minnesota; Page Morris, Judge.

Suit in equity by F. W. Hargreaves against L. D. York and others. Decree for complainant, and defendants appeal. Affirmed.

Oscar Mitchell, of Duluth, Minn. (Washburn, Bailey & Mitchell, of Duluth, Minn., and Milner, Miller & Searl, of Portsmouth, Ohio, on the brief), for appellants.

H. C. Fulton, of Duluth, Minn. (Fryberger, Fulton & Spear, of Duluth, Minn., on the brief), for appellee.

Before ADAMS, Circuit Judge, and TRIEBER and REED, District Judges.

ADAMS, Circuit Judge. In 1904, William Rock was the owner of a five thirty-seconds equitable interest in the S. E. ¼ of the S. E. ¼ of section 2 in township 46 N., of range 29 W., in Crow Wing county, Minn. The legal title stood in the name of one Brown, but was subsequently transferred to the defendant the Hutchins Iron & Ore Company, the present holder. On December 21, 1904, Rock conveyed by a deed duly executed by him one-half of his interest, or five sixty-fourths thereof, to the plaintiff below, F. W. Hargreaves. This deed, for reasons unnecessary to be explained, was not filed in the office of the register of deeds of Crow Wing county until February 2, 1910. On the 16th day of December, 1909, Rock conveyed by quitclaim deed, which was duly filed for record in the register's office of Crow Wing county on the 17th day of December, 1909, his entire interest in the land to Edward J. Daehler, who afterwards, and on the 20th day of December, conveyed the same to the defendant L. D. York.

The purpose of this suit was to quiet Hargreaves' title to five sixty-fourths of this land, evidenced by his prior, but unrecorded, deed from Rock, as against York's title, evidenced by his recorded deed from Rock to Daehler, his immediate grantor, and to secure a decree compelling the defendant the Hutchins Iron & Ore Company, holder of the legal title, to convey the same to him.

Which has the better title, Hargreaves or York? The statutes of Minnesota provide that every conveyance of real estate shall be recorded in the office of the register of deeds of the county where such real estate is situated, and that every such conveyance not so recorded shall be void as against any subsequent purchaser in good faith and for a valuable consideration. Section 6844, G. S. Minn. 1913.

No contention is made that Daehler was not a subsequent purchaser within the meaning of the statute, or that his deed was not first recorded, or that he did not pay a valuable consideration for it. Hargreaves claims that Daehler was not a purchaser in good faith, but took a deed

from Rock with knowledge of his prior deed. The trial court so found, and counsel for appellant York say:

"If this finding is sustained by the evidence, then, of course, the Hargreaves deed was valid as to Daehler."

In this way the present case is reduced to a single question of fact. Did Daehler know of the Hargreaves deed when he took his conveyance from Rock? The following facts are substantially uncontroverted:

Daehler was a lawyer residing in Portsmouth, Ohio, and a long-time friend of L. D. York. Raymond York was a son of L. D. York, and he and his father both resided in Portsmouth, Ohio. The Hutchins Iron & Ore Company was a corporation of Ohio, with its chief place of business in Portsmouth, and this company, besides holding the legal title to the land in question, was the equitable owner of a large interest in it. L. D. York was a stockholder and director of this company. The land in question was valuable chiefly for its iron ore prospects. Rock resided in Duluth, Minn.

Some time before December 15, 1909, York, Sr., York, Jr., and Daehler, knowing that Rock owned an interest in the land, had some interviews looking towards securing that interest. What these interviews were does not clearly appear, but it does appear that on or about December 15, 1909, following such interviews, Daehler and young York left Portsmouth for Duluth, the home city of William Rock, for the purpose of acquiring his interest in the land. On December 16th they found Rock and secured a quitclaim deed from him conveying his entire interest in the land to Daehler for a consideration considerably below its actual value. Although the deed was taken in the name of Daehler, the testimony is uncontradicted that Raymond York was jointly interested with him in the purchase. After recording their deed in in the office of the register of deeds of Crow Wing county they returned to Portsmouth, and on December 20th Daehler executed a quitclaim deed conveying the land, for the consideration of "one dollar and other valuable considerations," as expressed in the deed, to defendant L. D. York, who later caused it to be recorded in the office of the register of deeds of Crow Wing county, Minn. There is testimony that L. D. York paid Daehler and Raymond York $5,000 for the conveyance.

From testimony disclosing these and other facts, and from much contradictory evidence as to minor and incidental matters, the trial judge found that Daehler and Raymond York secured their deed from Rock for the defendant L. D. York and for his use and benefit, and that both Daehler and L. D. York took their titles with knowledge of Hargreaves' deed, and a decree was accordingly entered for the complainant. In an opinion handed down at the time of entering this decree the trial judge said:

"The evidence, taken as a whole, in view of all the facts and circumstances indicated thereby, and of the relation between the elder and younger York and Daehler, and of the conduct of Daehler and young York, and of the giving of the deed to the elder York immediately upon his return to Ohio, expressing as it does only a consideration of $1 and other valuable considerations, and in no way indicating that so large a consideration as $5,000 in money had been paid to him by the elder York, and of the letter from the

elder York to Jamison, indicating that he was fully informed in the matter and had the deed from Rock to Daehler then in his possession, indicates to my mind that Daehler and young York were in possession of the information which the elder York had, and, indeed, that they came to Minnesota to procure the Rock interest or right, such as it might be, for the elder York, and at his instigation, and were therefore in that matter acting as his agents. That being the case, the deed to Daehler was really a deed to the elder York, and, if the latter had notice of the Hargreaves deed, would give no superior right over the Hargreaves deed. That the elder York had notice of the Hargreaves deed I have no doubt."

So it appears that the trial court, after full consideration of the evidence, distinctly and unequivocally found two facts: (1) That Daehler and young York acted for and as agents of the elder York in procuring Rock's conveyance; and (2) that the elder York had knowledge of the existence of Hargreaves' deed at the time.

Counsel for appellant concede in their brief that there was evidence to support the finding that York had the knowledge, but denied the sufficiency of that evidence to establish the fact. They strenuously deny that there was any evidence to support the finding that Daehler and young York acted as agents for the elder York in procuring the Rock deed. Assuming for the moment that there was substantial evidence of the existence of the agency, we might under familiar principles of law rest our conclusion upon the presumption that the learned trial court which tried the case reached a correct conclusion on the issues of fact involved; but in deference to the earnest and able contention of counsel for appellant that the court reached an erroneous conclusion as to those facts we have carefully and critically read and examined all the proof in the case, and have unanimously reached the same conclusion on both these issues as the trial court did. The acts and conduct of parties, judged in the light of their relationship to each other and their interest in the subject-matter of the controversy, often speak louder than words. In this case we think this is conspicuously true. We cannot escape the conclusion that the project of securing the Rock title was devised and executed for the use and benefit of the elder York. The hasty trip to Duluth, following conferences between the elder and younger York and Daehler on the general subject of procuring the Rock interest, the adoption of a fictitious name by young York, which the evidence discloses, the expeditous securing of the deed from Rock, and recording it in the office of the register of deeds, the rapid return to Portsmouth, the immediate delivery of the deed so secured to the elder York, and the simultaneous execution of a quitclaim to him, are so entirely consistent with the conclusion reached by the trial judge that we cannot say there is no substantial evidence to support his findings. On the contrary, we are unanimously of the opinion, irrespective of the presumption arising from the trial court's conclusion, that both findings of fact were right, and necessarily the merits of the case are with the complainant.

Some contention is made that the deed from Rock to Hargreaves of December 21, 1904, was never in fact delivered to him, but was intended for some other purpose than as a grant of an interest in the land in controversy to him; but this contention was practically abandoned at the argument, and, if it were not, the possession of the deed by Har-

greaves and the other evidence on this point satisfy us that there is no merit in this contention.

The decree of the District Court is affirmed.

In re DESNOYERS SHOE CO.

UNITED SHOE MACHINERY CO. v. SANGAMON LOAN & TRUST CO.

(Circuit Court of Appeals, Seventh Circuit. August 6, 1915.)

No. 2238.

1. EVIDENCE ⟹130—ADMISSIBILITY—CONSTRUCTION OF CONTRACT.

The contractual rights of a creditor against a bankrupt's estate cannot be affected by dealings between the creditor and trustee after the bankruptcy, and evidence of such dealings is inadmissible to establish a practical construction of the contract.

[Ed. Note.—For other cases, see Evidence, Cent. Dig. § 403; Dec. Dig. ⟹130.]

2. CONTRACTS ⟹244—EVIDENCE OF MODIFICATION—COURSE OF BUSINESS.

Where machinery was leased to a bankrupt on a royalty basis, the lease providing that the royalty for each calendar month should be paid on the last day of the succeeding month, but that, if paid by the 15th, a discount of 50 per cent. should be allowed, the fact that the lessor in some cases allowed the discount on payments made after the 15th, but before the end of the month, does not evidence a modification of the contract, but only a reduction voluntarily made by the lessor from month to month for payment before maturity, which it was not bound to continue.

[Ed. Note.—For other cases, see Contracts, Cent. Dig. § 1128; Dec. Dig. ⟹244.]

3. USURY ⟹32—CONSTRUCTION OF CONTRACT—DISCOUNT OR PENALTY FOR NONPAYMENT—"DUE."

The provision in said lease reads that "the lessee shall pay to the lessor on the last day of each calendar month" a stated sum as rent or royalty, provided that, if the lessee shall pay on or before the 15th "the rent or royalty due" for the preceding month a discount of 50 per cent. "from such rent or royalty due" for the preceding month shall be allowed. *Held* that, in the absence of any evidence outside of the instrument as to the intention of the parties, the word "due," as used therein, should be given its secondary meaning of "owing," instead of its more usual meaning of "owing and now payable," and that, as so construed, the royalty did not become payable until the last day of the month, and the provision for the discount is not one for a penalty for nonpayment, but the discount is an allowance for payment before maturity, and valid (quoting Words and Phrases, Due).

[Ed. Note.—For other cases, see Usury, Cent. Dig. §§ 75–77; Dec. Dig. ⟹32.]

Appeal from the District Court of the United States for the Southern Division of the Southern District of Illinois; Arthur L. Sanborn, Judge.

In the matter of the Desnoyers Shoe Company, bankrupt; the Sangamon Loan & Trust Company, trustee. From an order allowing its claim in a reduced amount, the United Shoe Machinery Company appeals. Reversed.

Appellant's claim as a creditor included, as filed, the full amount of royalties due under numerous leases of shoe machinery. It was allowed for only 50 per cent. of the royalties. The lease contained the following provision:

"5. The lessee shall pay to the lessor on the last day of each calendar month as rent or royalty the sum of one (1) cent for each pair of misses' and children's, and one and one-quarter (1¼) cents for each pair of all other kinds, of boots, shoes, or other footwear or portions thereof, lasted or manufactured or prepared during the next preceding calendar month in any way, whether wholly or in part, by the aid of the leased machinery or any part thereof: Provided, however, that in all cases when the lessee shall pay to the lessor on or before the 15th day of the calendar month the rent or royalty due for the use of the leased machinery for the next preceding calendar month, the lessor will in consideration of such prompt payment grant a discount of 50 per cent. from such rent or royalty due for such preceding calendar month."

The petition in bankruptcy was filed July 21, 1911. The bankrupt's bookkeeper from November 1, 1909, testified that for a year preceding bankruptcy it was the custom of the lessor to accept as payment in full 50 per cent. of the royalties when paid after the 15th of the month following that in which they were earned. No testimony as to the practice between November, 1909, and June, 1910, was given, and none as to the dates when payments were made during the year beginning July, 1910, except as shown by bills dated July 1, August 1, September 1, October 1, and December 1, 1910, and February 1, 1911. Each of these bills was for royalties earned during the preceding month, and each of them was paid in full by payment of the 50 per cent. on some day between the 17th and 27th of the month in which they were dated. Testimony that the trustee's net 50 per cent. payment, made October 10, 1911, for royalties earned in August, 1911, was received as payment in full, was also admitted.

The referee held that the net amount represented the real debt, and that the other 50 per cent. was an unlawful penalty. The court confirmed his report, both on this ground and on the further ground that the conduct of the parties evidenced a modification of the leases.

Douglas W. Robert, of St. Louis, Mo., for appellant.

O. S. Humphrey and P. B. Warren, both of Springfield, Ill., for appellees.

Before BAKER, KOHLSAAT, and MACK, Circuit Judges.

MACK, Circuit Judge (after stating the facts as above). [1] 1. The contractual rights of the creditor against the bankrupt's estate cannot be affected by its dealings with the trustee. If the leases were modified, the modification preceded the bankruptcy. The dates when the lessor received payment of royalties earned from the trustee after the bankruptcy and the amounts thereof, whether net or gross, were immaterial. The objection to the proof thereof should have been sustained. The evidence itself must be disregarded.

[2] 2. There is no evidence, either verbal or documentary, that any net payments were made or received after the 27th of the month following that in which they were earned. If, under the contract, the royalties were due and payable only on the last day of the month following the one in which they were earned, then the only modification that, under any circumstances, could be deduced from the course of dealing, is that payments made at any time before maturity of the debt, though not made on or before the 15th day of that month

are entitled to the discount. Such a modification would not affect the present claim.

In our judgment, however, the course of dealing evidenced, not a modification of the agreement, but a reduction by the lessor from month to month of a part of its claim—a reduction made in consideration of the payment before maturity. A course of conduct of this kind might prevent the exercise of a reserved right of forfeiture until due notice had been given that such right would thereafter be strictly enforced. It would not, however, affect the contractual obligation itself. A lessor can allow a discount not provided for in the lease, or contrary to the terms thereof, with or without consideration, for as many successive months as he desires, without thereby obligating himself to continue the allowance for any time thereafter.

[3] 3. The main contention, however, is that the discount provision of the lease is a mere subterfuge for a penalty in excess of legal interest, to be exacted for the failure to pay a debt promptly at maturity. It is urged that, while it is true that suit could not be brought for the royalties earned in one month until on or after the last day of the succeeding month, nevertheless the debt is due as soon as earned; that, therefore, the lowest amount that would discharge the obligation after the due date—that is, the 50 per cent.—is the real amount of the indebtedness. That the debt is due when earned is clear, it is said, from the express language of the lease. It provides for the discount of 50 per cent. of the royalty, not earned, but "due" for the preceding month, if the lessee pay the lessor on or before the 15th day of the calendar month the royalty, again not earned, but "due" for the next preceding calendar month.

The apparent contradiction between the debt being due at the end of one month and suable because payable only at the end of the following month is avoided, and the obvious intention of the parties given full effect, if the word "due" be given its secondary meaning of "owing" (United States v. Bank, 6 Pet. 29, 8 L. Ed. 308; 3 Words and Phrases, p. 2213), instead of its more usual, but in this instance impossible, meaning of "owing and now payable." So interpreted, the lease is perhaps distinguishable from that considered by the court in Goodyear Co. v. Selz, Schwab & Co., 157 Ill. 186, 41 N. E. 625, in which it was held that only the net amount was the real debt; the other 50 per cent. being an unlawful penalty. There the royalties were expressly due and payable, not on the last, but on the first, day of the succeeding month, "and to be paid within one month from that day." The 50 per cent. discount was to be given "if the royalties due on the 1st day of any month shall be paid on or before the 15th day of that month." If, however, the words "to be paid within one month from that day" make the debt payable only a month thereafter, then the case cannot be distinguished.

We are not dealing with a loan of money for the use of which no more than legal interest can lawfully be demanded. Here the parties were empowered to fix the rentals at such sum and payable at such times as they deemed best. Having agreed thereon, they could further provide for any discounts based on payment before maturity. A

provision for discounts far in excess of the lawful interest rate is not only a usual, but an invariable, term in sales at wholesale of most lines and at retail of many lines of merchandise. Their validity is beyond question. If, however, 5 per cent, discount for payment in 10 days or 2 per cent. in 30 days, of a debt due in 60 days, is legal, 50 per cent. discount for payment in 15 days of a debt due in 30 days cannot be held illegal merely because it is a much larger percentage. In both cases, the allowance is in fact, as in law, a discount, not a penalty. The debt itself is what the parties by lawful agreement have declared it to be, the full amount earned and payable at a definite date thereafter. If the contract provided that, unless the debt should be paid at maturity, double the amount should be due and payable 15 days thereafter, the excess would clearly be a penalty for nonpayment at maturity, and, as such, illegal.

While the intent of the parties determines what the actual debt is, and whether the larger amount includes a penalty, or the smaller amount is the result of a discount, that intent is to be found primarily from the language of the contract itself. No evidence of any kind has been introduced tending to show that the parties had in fact agreed upon the smaller amount as the actual rental, and that they, or the lessor, through some monopolistic power or otherwise, caused the real agreement to assume its present form for the purpose of concealing, instead of expressing, the mutual intent. In the absence of any such proof, the court would be substituting the contract that it thought the parties ought to have made for the one in fact made by them, if it held that to be a penalty which the parties, free to contract on any mutually agreeable terms, decided should be a true discount.

We are in complete accord with the Court of Appeals for the Eighth Circuit, which, after careful consideration both of the authorities and the principles involved, reached the same conclusions in respect to an identically similar lease. United Shoe Machinery Co. v. Abbott, 158 Fed. 762, 86 C. C. A. 118.

The order allowing the claim reduced by 50 per cent. of the royalties will be reversed, and the cause remanded, with directions to allow the full amount of the royalty claims.

COMMERCIAL STATE BANK v. MOORE et al.

(Circuit Court of Appeals, Eighth Circuit. September 17, 1915.)

No. 4411.

1. WITNESSES ⚷269—CROSS-EXAMINATION—SCOPE—DISCRETION OF COURT.

The rule requiring cross-examination to be confined to the subjects of the direct examination does not limit the cross-examination to the specific details inquired of in chief, but rather permits full inquiry into the subject-matter so inquired of; the scope of which it may extend resting largely in the sound discretion of the presiding judge.

[Ed. Note.—For other cases, see Witnesses, Cent. Dig. §§ 949-954; Dec. Dig. ⚷269.]

⚷For other cases see same topic & KEY-NUMBER in all Key-Numbered Digests & Indexes

2. WITNESSES ⟹269—CROSS-EXAMINATION—SCOPE.

Where it was necessary to plaintiff's recovery to establish a partnership between defendant and another, who, as a witness for plaintiff, testified to the partnership and to various transactions and conversations with defendant relating thereto, it was competent on cross-examination to interrogate the witness as to other transactions and conversations at which third persons were present, tending to negative the existence of a partnership.

[Ed. Note.—For other cases, see Witnesses, Cent. Dig. §§ 949-954; Dec. Dig. ⟹269.]

In Error to the District Court of the United States for the District of Nebraska; Page Morris, Judge.

Action at law by the Commercial State Bank against Cass Moore and Charles H. Tully. Judgment in favor of plaintiff against Moore, and in favor of Tully against plaintiff, and plaintiff brings error. Affirmed.

Maxwell V. Beghtol, of Lincoln, Neb. (Mahin & Mahin, of Smith Center, Kan., and Edmund C. Strode, of Lincoln, Neb., on the brief), for plaintiff in error.

M. F. Harrington, of O'Neill, Neb. (C. C. Barker, of Alliance, Neb., and Burt Mapes, of Norfolk, Neb., on the brief), for defendants in error.

Before ADAMS, Circuit Judge, and TRIEBER and REED, District Judges.

ADAMS, Circuit Judge. The Commercial State Bank brought this suit in the District Court against Cass Moore and Charles H. Tully, alleging that they were in December, 1910, copartners engaged in the cattle-feeding business in Nebraska under the firm name and style of "Cass Moore"; that on the 1st day of December, 1910, they executed in their firm name of Cass Moore their three promissory notes, aggregating the sum of $15,377, and delivered them to the plaintiff in settlement of their then existing indebtedness to the plaintiff. Defendant Moore filed no answer, but defendant Tully did, specifically denying that he and Moore were copartners as alleged, or that he ever signed, executed, or delivered the notes sued on. The only trial issue was on the answer of Tully, whether or not the two defendants were copartners doing business in the firm name of Cass Moore as alleged. The trial resulted in a verdict and judgment in favor of plaintiff and against Moore, and against the plaintiff and in favor of Tully. This writ of error is prosecuted by plaintiff to secure a reversal of the judgment in favor of Tully.

No complaint is made of any of the proceedings of the trial except rulings on the admission of evidence. Comparatively little of the evidence produced at the trial is preserved in this record; enough, however, as counsel seem to have thought, to present the legal questions involved.

It is contended that the trial court erred in overruling certain objections of plaintiff to questions put by defendant's counsel to Cass Moore on cross-examination when he was on the witness stand as a

witness for plaintiff. He had been fully interrogated in chief by counsel for plaintiff on the issue of the existence of the alleged copartnership. He had testified that there was such a copartnership between himself and Tully, and had upon inquiry by counsel testified to many conversations at different times and places between himself and Tully, in which he said Tully agreed to become a copartner with him, or admitted that they were copartners, or did not deny that relationship on occasions requiring him to do so if they were not, and he had testified to conversations had between himself and Tully, discussing and adopting financial measures for carrying on the partnership business. On this kind of evidence plaintiff chiefly relied to prove the copartnership. There were no written articles of copartnership, and no formal or informal written agreement of that character.

The following questions, among others, had been put to Moore without objection, and the following answers had been given by him:

"Q. Well, you did not have any money to pay that check [referring to a certain check claimed to have been given in the conduct of the firm business]? A. Well, I don't know. Charley [referring to Tully] and I went down there and put up our note for $20,000, and we had not used that out yet. Q. Well, I will come to that later. That was the note that was given to Tagg, isn't it? A. Yes, sir. Q. And the mortgage on those 1,050 cattle up in Brown county? A. Well, the mortgage on a thousand head, I think. Q. Do you even know the bank on which that 276 cattle check was drawn? A. No, sir; I told you I didn't know. Q. Now, as a matter of fact, that $20,000 note that you have injected in here was not drawn until two months after these 276 steers were bought, was it? A. I could not say, but I have kind of got it in my mind that it was drawn in May, but I don't know. * * * Q. And you said Charley Tully was interested in feeding those cattle and the sale and care of them? A. Yes, sir. Q. Kindly produce the first letter he ever wrote to you on this $70,000 deal. A. Well, we met and talked this thing— Q. Answer my question. The first letter he ever wrote to you in this tremendous transaction? A. I could not produce. Q. Produce any letter he ever wrote to you about his being a partner in that immense $70,000 feed."

As disclosed by this and other evidence, Moore had claimed that certain cattle had been purchased by himself and Tully, involving an outlay of some $70,000; that in order to pay for them they had to borrow considerable money, and did borrow $20,000 from a bank in South Omaha through the agency of Tagg Bros. Commission Company; that he had executed their note for that amount of money, signing the firm name of "Cass Moore." Tully, on the other hand, claimed that this transaction was wholly his own, and that he, on his own account, had negotiated for the purchase of the cattle and was engaged in raising money with which to pay for them; that he had already exhausted his borrowing limit in his own banks, and had to borrow $20,000 to complete the payment; that Moore had in his possession on one of his pastures a bunch of cattle belonging to him (Tully), and he (Tully) requested Moore to accommodate him by signing a note for $20,000 and executing a chattel mortgage on that bunch of cattle to secure the payment of the note, and this was done, and the note ultimately paid by Tully.

In this attitude of the case counsel for Tully, in further cross-examination of witness Moore, asked him this question:

"Did Mr. Tully tell you, about the time this $20,000 note was given in the Stock Exchange Building in South Omaha, in the presence of Frank Currie, that he had to borrow $70,000, that all the bank could loan him was $50,000, and that Tagg Bros. had suggested that he get you to sign a note for $20,000 more, and as the cattle were to be kept at your ranch in Brown county that you sign a mortgage on Tully's cattle for the other $20,000, so the bank could carry the loan?"

Counsel for plaintiff made objection thereto in the following language:

"The plaintiff objects to any conversation between Mr. Moore and his partner, unless it was in the presence of the plaintiff or some of the plaintiff's officers. These talks between two partners are hearsay purely, and we never asked about this in direct examination, not a thing; and we object for the further reason that it is hearsay, and incompetent, immaterial, and irrelevant, as to the talks between these partners after the money was borrowed and the arrangements made to borrow the money."

The objection was overruled by the court, and the plaintiff duly excepted, and now assigns the overruling of this objection for error, Counsel for defendant Tully then asked this question of witness Moore:

"You may state whether, in June, 1909, very shortly before this $20,000 note you speak of was signed, in the corridor of the Exchange Building in South Omaha, in the presence of yourself and Charles H. Tully and Frank Currie, Mr. Tully said to you, 'The bank will loan me only $50,000; that is all they will loan to any one man, and they suggest that as the steers are going to be kept at your place that you sign a note and mortgage on the steers for $20,000,' and that you then and there said, 'Why, that is all right,' and did Mr. Tully then and there say to you, 'But, of course, I will pay this note, Cass, and you will never have any trouble on it.'"

The same objection was made to this question by counsel for plaintiff, and the same ruling followed. Due exception being saved, this ruling is also assigned for error. Many other similar questions concerning this $20,000 transaction were asked of witness Moore, with the same result, and the ruling of the court as to them is also assigned for error. Counsel for Tully then asked witness Moore this question:

"Did you in December, 1909, somewhere from the 10th to the 15th, in the corridor of the Paxton Hotel in Omaha, in the presence of yourself and Charley Tully and Frank Currie, have the following conversation, or Charley say to you, 'How are you coming along with the bunch of heifers you are feeding at Long Island, Kan.?' and did you say to him, 'First rate,' and did Mr. Currie then say to you, 'How many heifers are you feeding, Cass?' And did you say to him, 'About 1,300 head.' And then did you say to Mr. Tully at the same time: 'Charley, I wish you would go into partnership with me on this heifer deal at Long Island; those heifers ought to be fed or carried along until summer, and if they are they would make some good money. I don't believe I can raise the money to feed them that long, and I would like to have you go in with me and raise the money to carry them through, and then there will be money in it for both of us.' And did Mr. Tully then say to you in the same conversation: 'No, Cass; I wouldn't go into partnership with any one. I am interested with other people who are furnishing me money, and I couldn't go into a partnership.' And did Mr. Tully say further: 'I wouldn't go into any feeding deal anyway. I never fatted any cattle in my life. I don't understand anything about the business. I sell my cattle right off the grass, and I wouldn't think about going into a feeding deal of any kind, because I don't know anything about the business?'"

Plaintiff objected to this question as incompetent, immaterial, and irrelevant, and hearsay, unless it is shown that the conversation was in the presence and hearing of some officer of the bank, and not a proper impeaching question. The court overruled this objection, and the action of the court in so doing is assigned for error. Many other questions relating to business transactions between Moore and Tully, and as to what they did and said, were asked of witness Moore, to which objections of similar character to those already indicated were made, and overruled by the court, and to every such action of the court due exceptions were saved, and these rulings are also assigned for error. Enough, however, have already been specified, we think, to fairly present the questions raised in the case.

Afterwards, witnesses Knapp, Currie, and McNutt, the persons mentioned in the questions put to witness Moore, were introduced by defendant Tully, and questions designed to contradict Moore's answer were propounded to them. To these questions plaintiff's counsel objected, on the ground that the questions put to witness Moore were immaterial, and that no impeaching questions could be predicated upon them. This objection was overruled, and due exception saved.

From the generality of the objections it is difficult for us, and must have been for the trial court, to understand exactly the particular vice imputed to them; but the brief of counsel for plaintiff in error specifies the following to be the grounds of objection relied upon by them for a reversal: (1) That the questions related to matters not inquired about in direct examination; (2) that they sought to impeach the witness on immaterial and irrelevant matters—and to these we will give attention.

[1] It is contended that the questions complained of related to matters not specifically inquired of in chief. For instance, that witness Moore was not interrogated about the $20,000 note given in the Stock Exchange Building in South Omaha and that the several questions put to him on cross-examination concerning that note were incompetent. We think this contention discloses an erroneous conception of the governing rule. That rule does not limit a cross-examination to inquiries concerning some specific detail inquired of in chief, but rather permits full inquiry into the subject-matter so inquired of. As to this no hidebound rule can be laid down. The matter must necessarily rest largely in the sound discretion of the presiding judge, subject only to the reasonable requirement that the cross-examination must be confined to the subjects of the direct examination.

[2] Conceding, therefore, that Moore was not specifically examined in chief about the $20,000 note (although it appears that he had in an early part of his cross-examination testified without objection concerning this note), it cannot be denied that he had been exhaustively examined about the existence of the alleged copartnership. He had given testimony tending to show that he and Tully had purchased cattle for the partnership; that they had had many conversations about business matters and about raising money for the prosecution of their business. In fact, most of plaintiff's proof consisted of evidence that Tully and Moore had bought, sold, and handled cattle

as copartners, and had devised means for raising the money to do so. Nothing could more effectually tend to contradict such testimony than proof that during the time the partnership was claimed to have been in existence Tully had made an individual transaction in cattle involving $70,000, and as a supporting circumstance, to establish that fact, it was clearly relevant and material to show how he raised the money to pay for them. The testimony elicited by the questions complained of had a direct tendency to deny the existence of the copartnership. There is, therefore, no merit in the objection to this class of questions on the ground that they were not germane to the subject of inquiry in chief, and the court did not err in overruling them.

Considerations of the kind just alluded to dispose of the further contention that the questions were immaterial and irrelevant, and for that reason did not afford a lawful basis for subsequently impeaching the witness. Manifestly there is nothing of merit in this. The questions were relevant to the chief issue in the case and to the dominating subject of all previous inquiry. They tend directly, and in our opinion strongly, to establish a state of facts inconsistent with the fundamental basis of plaintiff's case, the existence of the copartnership between Moore and Tully. They were therefore material and relevant, and, being so, afforded sufficient basis for subsequent impeachment.

After witness Moore had denied that statements of the kind involved in these questions had been made at the times and places specified, witnesses were called by defendant Tully to prove that they were so made. No objection was made to these questions as originally put to witness Moore, nor to the questions subsequently put to the impeaching witnesses, on the ground that the questions failed to sufficiently specify time and place, or that they were too long, intricate, and comprehensive to afford the basis for impeachment. If the latter objections had been made, doubtless counsel would have been compelled by the trial court to reform them.

Argument is made by plaintiff's counsel that the questions were objectionable because they did not inquire concerning statements made by witness Moore himself, but chiefly concerning statements made by Tully to him. We think this is without merit. The inquiry was as to conversations between Tully and Moore bearing directly upon the chief issue in the case, and it is immaterial that they were not exclusively statements of Moore himself. They appear to have been made by him, or to him, or in his presence, and so they afford a sufficient basis of competency and relevancy to subject him to cross-examination and possible impeachment.

Many other exceptions were taken to rulings of the trial court on objections to questions, and to these we have given careful consideration. They present similar contentions to those already considered, and for reasons stated no error was committed in the rulings so made.

Finding no reversible error in the case, the judgment is affirmed.

BARNES & TUCKER COAL CO. v. VOZAR.

(Circuit Court of Appeals, Third Circuit. November 8, 1915.)

No. 1976.

1. APPEAL AND ERROR ⟹272, 273—EXCEPTIONS TO INSTRUCTIONS—RULE OF COURT.

Assignments of error based on exceptions to the charge of the court, or to requests refused, not taken specifically in writing, and immediately on the conclusion of the charge, and before the jury retired, as required by rule of the appellate court, will not be considered.

[Ed. Note.—For other cases, see Appeal and Error, Cent. Dig. §§ 1590, 1606, 1611–1623, 1625–1630, 1764; Dec. Dig. ⟹272, 273; Trial, Cent. Dig. §§ 680, 689.]

2. TRIAL ⟹284—INSTRUCTIONS—EFFECT OF FAILURE TO OBJECT OR EXCEPT.

Where the court in its charge assumed that a certain fact was conceded by a party, a failure of such party to object or except at the time is a waiver of any objection.

[Ed. Note.—For other cases, see Trial, Cent. Dig. §§ 683–685; Dec. Dig. ⟹284.]

3. MASTER AND SERVANT ⟹118—STATE REGULATION OF COAL MINES—LIABILITY FOR VIOLATION.

Act Pa. June 9, 1911 (P. L. 756, art. 4, § 8), requiring shelter holes to be provided on all main hauling roads in bituminous coal mines on which hauling is done by machinery, applies to all such roads, without regard to their width; and the fact that the act also requires the mine foreman to see that such shelter holes are cut does not relieve the owner from liability for injury to a miner resulting from failure to comply with such provision, if he has knowledge of the fact.

[Ed. Note.—For other cases, see Master and Servant, Cent. Dig. §§ 177, 202, 209; Dec. Dig. ⟹118.]

In Error to the District Court of the United States for the Western District of Pennsylvania; W. H. Seward Thomson, Judge.

Action at law by Victoria Vozar against the Barnes & Tucker Coal Company. Judgment for plaintiff, and defendant brings error. Affirmed.

Robbin B. Wolf, of Pittsburgh, Pa., and William F. Dill, of Barnesboro, Pa., for plaintiff in error.

Geo. C. Bradshaw and Thomson & Bradshaw, all of Pittsburgh, Pa., for defendant in error.

Before BUFFINGTON, McPHERSON, and WOOLLEY, Circuit Judges.

McPHERSON, Circuit Judge. [1] At the close of the judge's charge to the jury, counsel for the defendant company asked for, and was allowed, "a general exception to the charge, and also * * * to the answers to such of defendant's points as were not unqualifiedly affirmed." The trial ended on February 20, 1915, but no exceptions to the charge were specified until May 29, when the court ordered them to be "filed of record in this cause nunc pro tunc, as if presented in open court on the trial of this cause immediately after the court's charge and before the jury retired." The first seven assign-

⟹For other cases see same topic & KEY-NUMBER in all Key-Numbered Digests & Indexes

ments of error are founded on the exceptions so granted, and are in direct violation of rule 10 of this court (224 Fed. vii, 137 C. C. A. vii), which provides as follows:

"The judges of the District Courts shall not allow any general exception to the whole of the charge to the jury in a civil or a criminal trial at common law, nor shall a series of exceptions be allowed which produces the same result. But the party excepting shall state distinctly and separately the several matters in such charge to which he excepts, and only such matters shall be included in the bill of exceptions and allowed by the court. Exceptions to the charge or to the judge's action upon the requests for instruction shall be taken immediately on the conclusion of the charge before the jury retire, shall be specified in writing or dictated to the stenographer, and shall be specific and not general."

The assignments referred to will therefore not be considered, and we shall confine our attention to the eighth, ninth, and tenth. In order that these may be understood, a brief statement of facts is necessary:

The plaintiff is the widow of Joseph Vozar, a miner in the Coal Company's service, who lost his life on September 6, 1913. The mine is in Cambria county, Pa., and contains an upper and a lower vein of bituminous coal. These veins are connected by a tunnel several hundred feet long, sloping through solid rock at a 4 per cent. grade. The deceased, whose occupation was loading coal into mine cars, had been working in the upper vein. On the day in question, he and his son had quit work and were walking down through the tunnel to the mouth of the mine. The tunnel is a main haulage way, and cars are moved along its length by an electric motor. The track is about 1½ feet distant from one wall or rib, and about 6½ or 7 feet distant from the other wall. The miners were accustomed to use this means of exit, and the wider space was sufficient for safety under ordinary circumstances, especially if the cars remained on the track. While Vozar and his son were still in the tunnel, they were overtaken by a motor drawing a train, and the deceased was killed by a car that left the track (owing to the breaking of an axle) and crushed him against the wall. The only negligence charged against the company is the violation of article 4, § 8, of the Pennsylvania Act of 1911 (P. L. 756) in failing to provide shelter holes along the tunnel. The company admitted their absence, but contended that the act had been substantially complied with, because the tunnel was unusually wide, so wide in fact as to provide more protection than the statute contemplates. Another defense was that the broken axle was the proximate cause of the injury, and that no negligence in this particular had been charged or proved. Still further, it was insisted that the Pennsylvania act had put the tunnel under the exclusive control of the mine foreman, and had thus relieved the company from liability for the absence of shelter holes. And, finally, the contributory negligence of the deceased was set up as a complete reply to the plaintiff's claim. The trial judge instructed the jury as a matter of law that the company was negligent in failing to provide shelter holes, and submitted the question of proximate cause and of contributory negligence.

This brings us to the assignments of error. The eighth complains that the defendant's third point was not affirmed without qualification. The point and the answer are as follows:

"If the jury find from the evidence that the defendant had not complied with the act of assembly requiring shelter holes, if the absence of shelter holes was not the proximate cause of the injury to the decedent, the plaintiff cannot recover, and the verdict must be for the defendant.

"Answer: This point is affirmed, subject to my definition of proximate cause as given to you in the general charge."

This qualification merely recalled the attention of the jury to the general instructions on the subject of proximate cause, and, as these instructions are not the subject of a valid assignment, we see no error in the answer.

The ninth assignment is to the refusal of the fourth point:

"A failure to provide shelter holes along the haulage way was not the immediate and proximate cause of the injuries complained of, nor were those injuries the necessary and probable result of the failure on the part of the defendant to provide shelter holes, nor was the absence of shelter holes a concurrent cause of the injuries complained of; but the injuries were the direct result of the breaking of an axle, which derailed the car and thereby caused the injuries, and in this case there is no claim of any negligence in the construction, equipment, or inspection of the said car, and therefore the verdict must be for the defendant."

This point was rightly refused, because it asked the court for binding instructions, whereas the evidence required the question of proximate cause to be submitted to the jury.

The tenth assignment complains of the court's refusal to instruct the jury on the whole case in favor of the defendant. This fairly raises the question whether the failure to provide shelter holes is chargeable exclusively to the mine foreman, or is chargeable also to the company. In Pittsburgh, etc., Co. v. Cheko, 204 Fed. 353, 124 C. C. A. 451, we had occasion to consider the Pennsylvania cases on the subject of a mine foreman's status, and we need not repeat what was there said. The present controversy concerns a different aspect of the mineowner's liability, and the state court has recently decided several cases thereon that need consideration. When the tunnel was constructed in 1910, the Mining Act of 1893 was in force, which provided in article 6, § 4, that:

"On all hauling roads whereon hauling is done by machinery, and all gravity and inclined planes inside mines upon which the persons employed in the mine must travel on foot to and from their work, such shelter holes shall be cut not less than two feet six inches into the strata, and not more than fifteen yards apart, *unless there is a space of at least six feet from the side of the car to the side of the roadway, which space shall be deemed sufficient for shelter.*" Act May 15, 1893 (P. L. 62).

The tunnel complied with this section, for, although it had no shelter holes, it did leave a space of at least six feet from the side of the car to the side of the roadway. But in 1911 a new act was passed upon the subject of bituminous mines, which repealed all former statutes and provided in article 4, § 8, as follows:

"On all main hauling roads, on which hauling is done by machinery, shelter holes shall be cut into the strata, not less than two and one-half feet deep and at least four feet wide, and level with the road, and not more than fifteen yards apart; and said shelter holes shall be kept whitewashed and clear of obstruction, except in entries from which rooms are opened at regular intervals not exceeding forty-five feet: Provided, that the entrance to such rooms be kept

clear of obstruction for a distance of three feet. All shelter holes shall be made on the same side of the entry. All entries driven after the passage of this act shall have a clear space of two and one-half feet from the side of the car to the rib, which shall be made and continued throughout on one side of the entry, if in the judgment of the inspector the condition of the roof will permit, and shall be kept clear of obstruction." Act June 9, 1911 (P. L. 764).

It will be observed that this provision differs from the act of 1893, for it declares without qualification that shelter holes shall be cut on *all main hauling roads on which hauling is done by machinery.* The language is plain and unambiguous, and apparently requires shelter holes on every main hauling road on which hauling is done by machinery, without regard to its width. In our opinion, therefore, it applied to the tunnel in question. By the same section the mine foreman is charged with the duty of seeing that these shelter holes are cut:

"The mine foreman shall see that, on all animal and mechanical hauling roads, holes for shelter shall be cut into the strata," etc.

And for this reason the company denies responsibility for his failure, unless, indeed, knowledge of the defects has been brought home directly to the company.

[2] Upon this subject some evidence was given by one witness, who testified concerning the superintendent's knowledge of the situation, and this evidence is attacked as insufficient on the authority of Watkins v. Coal Co., 240 Pa. 419, 87 Atl. 860. But the attack must fail for this reason: It is evident from the following paragraph of the charge that the trial judge understood (probably from the atmosphere of the case) that the superintendent's knowledge was conceded:

"While the act of assembly provides that it is the duty of the mine foreman to see that shelter holes shall be provided as hereinbefore defined, it seems to be conceded here by the defendant's counsel that the superintendent had passed up and down that tunnel way frequently, and therefore knew, and hence the defendant company would be charged with the knowledge, that those safety holes were not provided in the tunnel. This being the case, it became my duty to say to you, as a legal proposition, that by reason of these facts the defendant company was negligent in failing to have the safety holes required by the act of assembly, because it does not do for a man to become wiser than the law, and the neglect of an important matter of this kind is negligence."

Now, if counsel knew that the court was mistaken in supposing that the superintendent's knowledge had been conceded (although no witness had been called to deny it), plainly this was the time to speak, or, if not then, certainly at the end of the charge. But no objection was made at either time, and not until three months afterwards was there any offer to except to this paragraph. To hear such an objection now would be unfair to the trial judge. His attention should have been called without delay to the fact that he was inadvertently going wrong, so that he might correct his slip, and we regard the company as bound by its failure to interpose a timely objection. "A party may not sit silent, and take his chances of a verdict, and afterwards, if it is adverse, complain of a matter which would have been immediately corrected at the time of the trial." McCollom v. Coal Co., 250 Pa. 32, 95 Atl. 380; Shade v. Llewellyn, 250 Pa. 456, 95 Atl. 583. We shall

therefore take it as a fact in the present discussion that the superintendent of the company did know of the defects in the tunnel.

[3] This being so, we think the Supreme Court of Pennsylvania has settled the controversy in two or three of its recent opinions. They were rendered under the Anthracite Act of 1891 (Act June 2, 1891 [P. L. 176]), but the rule laid down would seem to apply to the Bituminous Act also. In Bogdanovicz v. Coal Co., 240 Pa. 124, 87 Atl. 295, Justice Mestrezat thus states the rule referred to:

"The statute, however, has not relieved the owner from liability for his own neglect or failure of duty. There may be cases in which both the mine foreman and the mine owner may be liable to an injured party. If through any neglect or failure of duty the mine owner causes injury to one of his employés, the general rule applicable in such cases subjects the owner to damages for his default. If there is a dangerous condition existing in the mine, which is permitted by the negligence of the mine foreman, resulting in injury to an employé, the mine owner will be responsible, if he has knowledge of the fact and takes no steps to remove it. The owner cannot neglect this duty and escape responsibility. The statute provides that the owner shall use every precaution to insure the safety of the workmen in all cases, whether provided for in the act or not."

And a similar statement is made by Justice Frazer in McCollom v. Coal Co., 250 Pa. 31, 95 Atl. 381:

"It has frequently been held by this court that when the owner has knowledge of conditions which are hazardous to employés, or knowledge of the failure of the mine foreman to properly perform his duties in safeguarding the lives of others, it is his duty to remedy the dangerous condition; and failure on his part to do so will give rise to liability which he cannot avoid by the plea that the danger arose through the act of the mine foreman, for whose negligence he is not responsible. Wolcutt v. Erie Coal & Coke Co., 226 Pa. 204 [75 Atl. 197]; Watson v. Monongahela River, etc., Co., 247 Pa. 469 [93 Atl. 625], and cases therein cited."

To which may be added the following quotation from Dobra v. Coal Co., 250 Pa. 318, 95 Atl. 467:

"The second question raised on behalf of appellant is: 'Whether the operator of a mine, who has constructed and provided a passageway of proper width, is liable to an employé for an injury resulting from an insufficiency of space between the side of a car and a prop subsequently located by the mine foreman in charge of the mine.' That the responsibility for the care of the passageways in a mine rests upon the owner, and cannot be shifted to the mine foreman, has been settled by our decisions. In Simmons v. Lehigh Valley Coal Co., 240 Pa. 354, 358 [87 Atl. 568, 569], which was an action brought under the act of June 2, 1891 (P. L. 176), Mr. Justice Mestrezat said: 'The fact that the company had placed in the mine a competent, certified mine foreman did not relieve it from the liability imposed by the statute. To provide a proper passageway in the tunnel was a nondelegable duty imposed on the mine owner, and not one of the statutory duties imposed on the mine foreman.' To the same effect is the recent case of Watson v. Monongahela River, etc., Co., 247 Pa. 469 [93 Atl. 625]. In the present case the plaintiff testified that some two weeks before the accident he notified the superintendent of the mine and the district superintendent that the props in question were in the way and were dangerous, and, according to his statement, they said they would get them out. He also said that the props of which he complained were in the passageway during a period of a few weeks before he spoke to the superintendent about them. There was evidence sufficient to go to the jury on the question of defendant's knowledge of the alleged obstruction in the passageway."

Following these cases, therefore, the judgment is affirmed.

In re JAMISON BROS. & CO.

TOLAND'S EX'RS v. GEORGE et al.

(Circuit Court of Appeals, Third Circuit. November 5, 1915.)

No. 1980.

1. APPEAL AND ERROR ⟹1099—DETERMINATION—FORMER JUDGMENT.

A bankrupt pledged securities which were not his own. The pledgee satisfied the debt by selling part of the securities, and delivered the remainder to the trustee. Thereafter it was adjudicated by the District Court and affirmed by the Circuit Court of Appeals that the securities delivered to the trustee did not belong to the bankrupt. Subsequently it became a question whether the pledgee, who had warranted the transfers of the securities sold, would be held liable on his warranty; the shares appearing not to have belonged to the bankrupt. *Held* that, notwithstanding the decision that the shares delivered to the trustee were not the property of the bankrupt, such decision would not preclude the pledgee from asserting a lien thereon, and the court might order the trustee to hold the shares until the question whether the pledgee would be held liable on his warranty, and so in a position to assert a lien, was decided.

[Ed. Note.—For other cases, see Appeal and Error, Cent. Dig. §§ 4370–4379; Dec. Dig. ⟹1099.]

2. BANKRUPTCY ⟹210—JURISDICTION—COURT OF EQUITY.

In such case, as the shares were actually in the custody of the trustee and had apparently been the property of the bankrupt, the court had jurisdiction to determine the pledgee's asserted rights therein; a court of equity having power to determine all questions affecting a fund in course of distribution.

[Ed. Note.—For other cases, see Bankruptcy, Cent. Dig. §§ 321–323; Dec. Dig. ⟹210.]

3. BANKRUPTCY ⟹298—ENFORCEMENT OF LIEN—LACHES.

A delay of about two years in bringing on the pledgee's petition for hearing is not laches barring relief; it not appearing that the creditors were injured, or that the delay was not acquiesced in by all parties.

[Ed. Note.—For other cases, see Bankruptcy, Cent. Dig. §§ 430–443; Dec. Dig. ⟹298.]

Appeal from the District Court of the United States for the Eastern District of Pennsylvania; Oliver B. Dickinson, Judge.

In the matter of the bankruptcy of Jamison Bros. & Co. Petition by Robert Toland and others, as executors of Edward D. Toland, deceased, against O. B. George and others. From a decree reversing a referee's order in favor of the petitioners, petitioners appeal. Decree reversed, with directions to reinstate referee's order.

See, also, 222 Fed. 92.

The following is the opinion of the court below:

The ways of these bankrupts were so devious that the tracing of their course is a labyrinthian task. They were involved in so many contemporaneous transactions following down along parallel lines that any chronological statement of the facts almost compels repetitions. We may begin, however, with the statement that the bankrupts were bankers and brokers. In the course of their business they received, for loans or advances made, pledges of bonds and certificates of stocks as collateral, or otherwise held securities belonging to their customers. These it is charged they hypothecated, some with and others with-

out authority, for moneys borrowed by them. It is further charged that some of the powers by which the transfers were made were forged. Accompanying the transfers by means of these forged powers were implied or express warranties by the assignors, and in some instances by brokers, of the genuineness of the signatures. Even the trustee, and brokers acting for him, have innocently enough been drawn into this complication through sales made by the trustee following transfers now asserted to have been forged. Out of the first stage of these crooked transactions by the bankrupts spring three classes of claimants. Some have claims to share in the assets of the bankrupt estate. Others claim some of the assets as their property. These classes of claimants are those whose securities were used with authority, those whose securities were fraudulently disposed of, and those whose supposed transfers had been forged, in addition to the parties (since paid) who had made collateral loans to the bankrupt. Out of the sales made by pledgees and others through forged transfers arise another class of claimants in those who have suffered or are threatened with loss because of the implied or express warranties into which they were drawn. Other parties, of whom no special mention need now be made, are also involved in this record.

In this outline statement particular reference need only be made to the parties who are concerned with the report of the referee now before us for review. These are A. A. Sellers, C. P. Shoemaker, Frank H. MacMorris, John S. Latta, O. B. George, Smyth, Henry & Kirkbride, and Edward D. Toland. Any attempt to give in detail the facts which show the relations (except in their general bearings) of each to the others and to the bankrupt estate would call for a lengthy statement. These facts have already in part been stated. We therefore confine ourselves to the facts not appearing in the adjudications heretofore made. The first complication grew out of the fact, already mentioned, that the bankrupts had pledged for loans made to them securities belonging to others. The holders of this collateral sold it. In some instances all the collateral, and in others part of what was so held, was sold. The money balance remaining after payment of the loans and the unsold securities were turned over to the trustee. The referee then went into an inquiry to find who were entitled to the unsold securities and to the remaining proceeds of those sold. This he in the first instance determined in proceedings which began July 6, 1911, and ended with his order of July 6, 1912. This order was followed on a petition for a review of his findings by the decree of this court on May 26, 1913, and this in turn by the decree of the Circuit Court of Appeals on appeal and after reargument. The mandate of the latter court was lodged of record here December 20, 1913.

On this statement of facts the only inquiry which would suggest itself is how any question could arise over what had thus been determined. It seems to have been brought into question in this wise. At the time the collaterals were sold the title was supposed to have been in the control of the pledgees, of whom, for illustration, Edward D. Toland was one. The power to dispose of the securities was evidenced (it is to be supposed) by the usual form of transfer executed in blank. No question of the genuineness of these signatures had arisen. Following the usual practice Toland in making sale of those sold warranted such genuineness. On October 30, 1912, he was notified that the signature to the transfer of one of the securities he had sold was a forgery. Anticipating that he might be held liable on his warranty, he on November 15, 1912, applied to the referee for an order for the return to him of the cash and unsold securities which he had turned over to the trustee. The purpose was that he might thus recoup any loss sustained by him because of his warranty.

We must pause here to bring into the narrative and down to this point another branch of the case. Among the securities delivered to the trustee were bonds of the par value of $5,000, known as "Consols 4's" of the Securities Company of New York. These were sold by the trustee through the brokerage firm of Smyth, Henry & Kirkbride, who, as in the case of the Toland sales, warranted the genuineness of the signatures to the transfer. On November 20, 1912, Smyth, Henry & Kirkbride applied for a like order with that of Toland, that the proceeds of these bonds be paid over to them for protection against possible loss because of their warranty. There were other petitions presented, but

they were all of like tenor with the above. Subsequent to, but along with, the filing of these petitions, Latta and other claimants to the property and moneys in the hands of the trustee asked for orders on him to deliver what the court had determined to belong to them. These petitions were met with demurrers and answers which we need not follow. The proceedings finally culminated, after interpleading orders, in a ruling by the referee refusing the prayers of the petitions of Latta and George, and granting the prayer of Toland, and granting also that of Smyth, Henry & Kirkbride, so far as to order that the proceeds of the Securities Company bonds be held by the trustee. Latta, George, Sellers, and Shoemaker filed petitions to have this decision and order reviewed, and they are accordingly now before the court.

Whatever might be said of the general equities of Toland, we are confronted with this dilemma. The District Court has decreed that certain parties are "entitled to" the named securities and sums of money in the hands of the trustee. The appellate court has given its sanction to this decree by its affirmance and adoption, so that it has become the decree of that court. The order of the referee nullifies this decree and substitutes one of his own making for it. Clearly this was beyond the power of the referee or of this court to do. Mandates of the Court of Appeals to this court are to be obeyed. They cannot be annulled or modified, except by that court or the Supreme Court on appeal, and no referee can make any orders inconsistent with what the court has decreed.

This disposes of the discussion and calls for a revocation of the order.

It may be said in passing, however, that the fact upon which the supposed equity of Toland turns came to light nearly seven months before the decree of May 26, 1913, was entered in this court, and that the jeopardy in which he feels himself placed grew out, for all that appears, of his own voluntary act of entering into an agreement of warranty with the purchaser of the bonds and stocks which he sold. The predicament of Smyth, Henry & Kirkbride is one which carries with it a strong appeal for any aid in extricating them, which can be rendered without doing violence to the rights of others. It is evident, however, that no harm can come to them through any proceedings in this cause until distribution of the fund which they ask to be held for their protection. This, indeed, applies also to Toland.

The orders and each of them, brought up by this petition for review, are revoked and annulled, and the report remitted to the referee, with directions to proceed with the cause in accordance with the decree of this court of May 26, 1913, as affirmed by the Circuit Court of Appeals.

C. Berkeley Taylor, of Philadelphia, Pa., for appellants.

Henry M. Du Bois, of Philadelphia, Pa., for appellee Latta.

B. Gordon Bromley and Harold Evans, both of Philadelphia, Pa., for appellee George.

Before BUFFINGTON, McPHERSON, and WOOLLEY, Circuit Judges.

McPHERSON, Circuit Judge. The question for decision is whether the referee was right in directing the trustee of Jamison Bros. to retain the custody of certain securities that had been pledged by the bankrupt to Edward D. Toland, but had afterwards been returned by Toland to the trustee. This retention was only to be temporary—until the court should determine whether Toland had lost the right to claim a lien thereon. The ground of his claim was that after he had returned the securities to the trustee he had discovered that he was still exposed to liability in connection with the sale of certain other of the pledged securities, and that he would be entitled to reimbursement from the securities returned in case this liability should be adjudged against him. On the other hand, O. B. George and John S.

Latta, the respective owners of the returned securities, set up inter alia a decree of the District Court, affirmed by the Circuit Court of Appeals, adjudging them to be the owners, and asserted these decrees to be conclusive. The referee directed the trustee to retain the securities, but the District Court reversed the order, holding the decree of this court to be final.

The situation is involved, and requires the facts to be stated with some fullness. On May 9, 1911, the date of adjudication in bankruptcy, Jamison Bros. & Co. owed Toland nearly $82,000 and had pledged various securities as collateral for the loan. Soon afterwards Toland sold nearly all of them, realizing enough money to pay his debt and leave a small surplus. Early in June he paid the surplus to the trustee, and delivered to him the remaining securities. Among these were 38 shares of the American News Company and 100 shares of the Easton Electric Company. The bankrupts had wrongfully pledged these securities, of which they were merely the bailees, and in July George claimed to be the rightful owner of the 38 shares, and Latta claimed to be the rightful owner of the 100 shares. A year later, in July, 1912, the referee sustained their claims, but his decision did not satisfy all the creditors, and on November 15 he certified the question to the District Court for review. On that very day Toland presented a petition to the referee which may be described as the beginning of the dispute now before us. In that petition he averred—the facts hereafter stated are not controverted—that on October 30, two weeks before, he had learned for the first time that the transfer on the back of certain bonds among his collateral was believed to be a forgery. He had sold these bonds for about $12,000, and as he had guaranteed the suspected transfer he would be obliged to repay this sum, if the suspicion should prove to be well founded. Asking for protection against this contingency, he prayed that the trustee might be ordered to redeliver to him the 38 shares and the 100 shares already referred to. On November 29 the trustee demurred to the petition, and the proceeding remained in that situation for nearly two years.

Meanwhile, however, other proceedings that are relevant to the controversy now in hand were going on before other tribunals. In February, 1913, Toland received notice of a suit in the Supreme Court of New York County between two other parties. This suit involved the question of the forgery, and he afterwards became a party by intervention to protect his interest. The Supreme Court decided that he was not liable for the consequences of the forgery (the reasons not being important), and the Appellate Division affirmed the decree. But an appeal was taken to the New York Court of Appeals, and the case has not yet been heard, and we are informed cannot be heard for several months. For this delay the federal tribunals here are in no way responsible, and it cannot be decisive in the present dispute. The situation is this: If the decree already entered in Toland's favor be affirmed by the highest court of the state, he is altogether relieved from liability and can have no further claim upon the shares in question. But if the New York court should decide against him, and he should be

obliged to make good his guaranty to the extent of $12,000, he will then be compelled to fall back on the similar guaranty of the bankrupts made to him when the bonds were pledged. Whether he can reimburse himself, in whole or in part, out of the 38 shares and the 100 shares, will then be a question of importance to be determined in this jurisdiction.

While these events were happening in the courts of New York, let us see what was going on in Pennsylvania. As already stated, the referee's decision that George and Latta were the true owners of the stocks was certified to the District Court with similar questions, and was affirmed by that tribunal on May 26, 1913. An appeal was taken to this court, but the decree below was affirmed in November, 1913, and after a reargument was again affirmed in December of the same year. Re Jamison Bros., 209 Fed. 541, 126 C. C. A. 363. For some reason, nothing more appears to have been done in the bankruptcy court until eight or nine months afterwards, when the parties interested in the securities now in question turned to Toland's petition of November 15, 1912, which was still pending before the referee. All parties knew of this petition, and of Toland's claims as pledgee, and the stocks were still in the hands of the trustee. On October 1, 1914, the trustee's demurrer was overruled, and a few days later the trustee answered Toland's petition, and set up the titles of George and Latta. These claimants came in also with petitions of their own, asking that the trustee might be compelled to deliver the stocks to them, and to these petitions the trustee replied by setting up the claim of Toland. On October 30 the referee, recognizing that the chief dispute was between the owners and the claimant, ordered Toland to become a party defendant to the petitions of George and Latta. This was done; Toland again setting forth the facts in reference to the forgery and the suit in New York, and asking that the trustee retain the securities until the controversy there should be finally decided. On December 1 the referee refused the petitions of George and Latta, and granted the relief asked by Toland, directing the stocks to be retained by the trustee. This decision was certified to the District Court on December 24, and on May 24, 1915, the referee's order was reversed, Toland's petition was dismissed, and the trustee was ordered to deliver the securities to George and Latta respectively. From this decree the present appeal was taken by Toland's executors.

[1] By reference to the opinion of the District Court set out above, it will be observed that the decision is put upon the single ground that the decree of this court, entered in November, 1913, affirming the previous decree of the District Court entered on May 26, had decided that George and Latta were "entitled to the named securities * * * in the hands of the trustee," and that neither the referee nor the District Court had authority to amend or modify what this court had done. We therefore have the dispute below referred to us by what seems to have been in effect a pro forma decree, to which the learned judge regarded himself as constrained. We appreciate the attitude of the court below, and have no doubt that, if the District Judge had felt himself at liberty to consider the question, he would have come to

the conclusion that the decree of this court was not an obstacle in the way of doing what the equities of this unusual situation appear to demand. We see no occasion to modify that decree. In November, 1913, we decided what was then before us, namely, the question who were the owners of these (among other) securities; but we did not decide, and were not asked to decide, whether the title, the right of ownership, was or was not subject to a lien, actual or contingent, in favor of Toland. Obviously a man may be the "owner" of property, although the property may be incumbered to its full value. George and Latta have been decreed to be the owners of these shares, and that question is settled, so far as the parties to that decree are concerned. But whether the title was burdened with a contingent equity was not involved, either actually or by necessary implication. Toland was not a party, and in any event was not and is not now contesting the title of either owner. He merely asserts a contingent right, whether the securities belonged to the bankrupts or to George and Latta. No rights of purchasers for value have intervened.

The validity of this right should not now be determined. The point may never arise, and we decide nothing now, except that the trustee should retain the shares for the present, so that Toland may have an opportunity to be heard if the need therefor should arise.

[2] It is only necessary to add a few words in reply to one or two positions of the appellees. First, we have no doubt of the jurisdiction below and here. The shares are actually in the custody of the trustee, who holds them in that character. They were apparently the property of the bankrupts, and the District Court was bound to determine who was in fact the owner. Generally speaking, a court of equity has power to determine all questions affecting a fund in course of distribution. We think the court is equally bound to determine whether these shares are subject to Toland's lien, if he should lose the appeal in New York; for in that event the distribution of the bankrupt's estate will be affected. If Toland loses, and if his lien is good, George and Latta will evidently have a claim against the estate that they do not now have; and, if the lien is good, and the shares do not produce $12,000, Toland will have a claim for the balance.

[3] Neither has Toland been guilty of laches that estops him from asserting his claim. There is no evidence that the delay—in which all parties seem to have shared—has done harm to George and Latta, and there is nothing, therefore, to interfere with Toland's proceeding. Even if he could have intervened in the dispute over the title, his claim would have been restricted to just what it is now, namely, a claim that the trustee should retain the shares. In fact, he did intervene before the appropriate tribunal, the referee, and, as we have already said, all parties were aware of his claim. But we may say that, if for any reason it should seem desirable to sell these shares and substitute the proceeds, we have no doubt an order of sale will be made upon proper application.

The decree is reversed, with directions to reinstate the order of the referee.

UNION TRUST CO. et al. v. BEACH.

(Circuit Court of Appeals, Fifth Circuit. October 29, 1915.)

No. 2806.

1. APPEAL AND ERROR ⟹324—PARTIES—SEVERANCE.

A formal summons, followed by an order of severance, is not indispensable to the maintenance of an appeal by one of the parties to a decree, if it fairly appears from the record that the parties who might have joined have been notified to do so, and have refused.

[Ed. Note.—For other cases, see Appeal and Error, Cent. Dig. §§ 1806–1809; Dec. Dig. ⟹324.]

2. CORPORATIONS ⟹480—MORTGAGES—PRIORITY OVER SECRET EQUITIES.

The intervener's guardian purchased lands and conveyed them to the B. Company, which executed a mortgage thereon to a trust company to secure an issue of bonds. The B. Company contracted for the sale of the land to the F. Company for a sum payable in installments to the trust company, which assented in writing and ratified the contract. One payment was made and the F. company thereafter became bankrupt. By order of the bankruptcy court, and with the consent of the B. Company, the trustee in bankruptcy surrendered and renounced the bankrupt's rights under the contract. The order of such court recited that the rights of the trust company were preserved under its contract with the B. company, and at the foot of the order was a consent thereto by the trust company, "with all rights of the trust company preserved." The land was sold at foreclosure for much less than the unpaid installments of the purchase price. The intervener claimed that her guardian purchased the land with her money. *Held,* that the rights of the trustee in the land were not subordinate to the secret equity of the intervener; the public records not disclosing its existence, and the trustee having no notice thereof when its rights attached.

[Ed. Note.—For other cases, see Corporations, Dec. Dig. ⟹480; Mortgages, Cent. Dig. §§ 307–343.]

3. CORPORATIONS ⟹480—MORTGAGES—PROPERTY SUBJECT—PAYMENTS BY PURCHASER.

The money paid by the F. Company was held by the trust company in its capacity as trustee under the deed of trust, and was subject to the lien thereof, though such company did not apply it on the secured debt, or make any mention thereof in a bill to foreclose the deed of trust, as it was obviously the intention of the contract that a compliance by the F. Company with the terms thereof would entitle it to a conveyance free from the incumbrance and have the effect of substituting the money paid in lieu of the land, and moreover the trustee's trust relation prevented its holding such payment free from the lien.

[Ed. Note.—For other cases, see Corporations, Dec. Dig. ⟹480; Mortgages, Cent. Dig. §§ 307–343.]

4. BANKRUPTCY ⟹268—SALES—MORTGAGES—PAYMENTS BY PURCHASER.

The lien of the deed of trust upon the payment had not been released or discharged; the trustee's consent to the order of the bankruptcy court not having that effect, especially as the land sold for less than the unpaid installments of the purchase price.

[Ed. Note.—For other cases, see Bankruptcy, Cent. Dig. §§ 372–379; Dec. Dig. ⟹268.]

Appeal from the District Court of the United States for the Southern District of Georgia; Emory Speer, Judge.

Suit by the Union Trust Company to foreclose a deed of trust, in which Myrtis Beach intervened. From a decree in favor of the intervener, the Trust Company and others appeal. Reversed.

George S. Jones and Orville A. Park, both of Macon, Ga. (Hardeman, Jones, Park & Johnston, of Macon, Ga., on the brief), for appellants.

William M. Toomer, of Jacksonville, Fla., and Robert M. Hitch, of Savannah, Ga. (Hitch & Denmark, of Savannah, Ga., on the brief), for appellee.

Before PARDEE and WALKER, Circuit Judges, and FOSTER, District Judge.

WALKER, Circuit Judge. [1] This is an appeal by the Union Trust Company and the Mallary Mill Supply Company from a decree in favor of Myrtis Beach, rendered on her intervening petition filed in a foreclosure suit brought by the Union Trust Company. The petition asserted a claim to or upon the sum of $18,000, which had been received by the Union Trust Company under circumstances hereinafter stated. No party to the case other than Myrtis Beach appears to have an interest in sustaining the decree rendered in her favor. It appears, from the order of the District Judge allowing the appeal, that all defendants to the intervening petition other than the appellants were duly notified in writing to join in the appeal if they desired to do so, and that they failed and refused to join therein. It sufficiently appears that all parties to the suit, other than the appellants, who could have been adversely affected by the decree appealed from, had notice of the appeal and declined to join in it. The appeal is not subject to be dismissed on the motion of the appellee because such other parties did not join in it and there was no summons and severance. A formal summons, followed by an order of severance, is not indispensable to the maintenance of an appeal by one of the parties to a decree, if it fairly appears from the record that the parties who might have joined have been notified to do so and have refused. Johnson v. Trust Company of America, 104 Fed. 174, 43 C. C. A. 458. The motion to dismiss the appeal is denied.

In the year 1905 W. R. Beach bought certain lands in Calhoun county, Fla., and took title thereto in his own name. In the year 1910 he conveyed these lands to the Beach Manufacturing Company, and thereafter, in the same year, that company, to secure $200,000 of bonds issued by it, executed to the Union Trust Company a deed of trust or mortgage, covering those lands, other lands in the state of Georgia, and sundry articles of personal property. In the year 1913, after $30,000 of the principal of the debt secured by that instrument had been paid, the Beach Manufacturing Company entered into a contract with the Florida Timber Products Company for the sale to the latter company of said Florida lands for the sum of $165,000, which was made payable in installments to the Union Trust Company, and the first installment, $18,000, was paid to that company shortly after the contract of sale was made. The Union Trust Company in writing assented

to and ratified that contract. Thereafter the Florida Timber Products Company was adjudged a bankrupt by the District Court of the United States for the Northern District of Florida, having made no payment on its contract to purchase other than the above-mentioned one of $18,000. After the Union Trust Company had brought its suit in the District Court of the United States for the Southern District of Georgia for the foreclosure of the mortgage or deed of trust to it, the trustee in bankruptcy of the Florida Timber Products Company, pursuant to an order made by the court of bankruptcy, which order was consented to by the Beach Manufacturing Company, surrendered and renounced all rights of the bankrupt under its above-mentioned contract of purchase. That order contained the recital that:

"The rights of the Union Trust Company are preserved under their contract with the Beach Manufacturing Company."

It is not made to appear that the Union Trust Company had any connection with the making of that order, except such as is evidenced by its written statement found at the bottom of it, as follows:

"Consented to, with all rights of Union Trust Company preserved against Beach Manufacturing Company under its contract and mortgage."

After the above-mentioned Florida lands had, under a decree of foreclosure rendered in an ancillary suit brought by the Union Trust Company in the United States District Court for the Northern District of Florida, been sold for the sum of $25,000, and that sum, less the amount of costs and fees made payable therefrom, had been ordered by that court to be paid to the clerk of the United States District Court for the Southern District of Georgia, to be placed in the registry of that court, and to be distributed and paid out under the orders of that court, the appellee, Myrtis Beach, filed in the original foreclosure suit her petition of intervention, which prayed that the above-mentioned sum of $18,000 deposited with the Union Trust Company be adjudged and decreed to the Beach Manufacturing Company as trustee for the petitioner, and be adjudged and decreed to be unincumbered and unaffected by the deed of trust or mortgage to the Union Trust Company. The asserted right of the intervening petitioner was based upon the claim that W. R. Beach had improperly used in his purchase of the Florida land more than $18,000 which belonged to the petitioner, and of which he had possession as petitioner's guardian. The appeal is from a decree which sustained the claim set up by the intervening petition.

[2] It is not claimed, and there is no room for claiming, that, as to any land covered by the deed of trust to the Union Trust Company, the right of that company as trustee was subordinate to any claim which the petitioner, the appellee here, may have had. When the rights of the trustee attached, the public records did not disclose the existence of the appellee's claim, and the trustee did not otherwise have notice of it. The secret equity which is the basis of the claim of the appellee cannot prevail, if the payment of the $18,000 by the Florida Timber Products Company subjected that money to the lien of the deed of trust to the Union Trust Company, and nothing has occur-

red which is entitled to be given the effect of a release or discharge of that lien.

[3] The contract for the sale of the Florida lands to the Timber Products Company provided that that company should, upon its compliance with the terms of the contract, receive from the Beach Manufacturing Company "a good and sufficient warranty deed conveying said land in fee simple." The existence of the incumbrance on the land put it beyond the power of the seller to carry out this provision of the contract, unless the incumbrancer's consent to a release of its lien was secured. For the conduct of the parties to the contract in making the stipulated purchase price payable to the Union Trust Company, and in obtaining that company's assent to and ratification of the contract, no plausible explanation is suggested, other than the very obvious one disclosed by the fact that that company held an incumbrance on the land contracted about, and was entitled, so long as that incumbrance was in existence, to hold the land subject to it, unless an arrangement satisfactory to the holder of the incumbrance was made for its release of the land from the lien upon it. From the facts that all of the purchase price was made payable to the Union Trust Company, the holder of an incumbrance on the lands which were the subject of the contract, and that the contract was in writing assented to and ratified by that company, obviously it is to be inferred that the understanding was that a compliance by the purchaser with the terms of the contract was to have the effect of entitling it to a conveyance of the lands freed of the incumbrance, and of substituting the money paid to the holder of the incumbrance in lieu of the released land, with the result of transferring to that money in the hands of the trustee the lien to which theretofore the released land was subject. The money so paid, as much as the land for or upon which it was paid, is to be regarded as held by the Union Trust Company in its capacity as trustee under the deed of trust to it.

In effect the transaction was an agreement by the owner of land and the holder of a mortgage upon it to sell it for a sum made payable to the mortgagee in installments. In the case of such a sale the lien of the mortgage attaches to the proceeds of the sale in the same manner and with the same effect as it bound the premises before the sale was made. Markey et al. v. Langley et al., 92 U. S. 142, 23 L. Ed. 701; Lewis v. Dillard, 76 Fed. 688, 22 C. C. A. 488. When the incumbrance is a deed of trust to secure debts payable to a person or persons other than the trustee, the lien of the deed of trust attaches to each installment of the stipulated purchase price as it may be paid, and is not to be regarded as released or discharged unless the trustee in some proper way consents to such release or discharge, or something occurs which on equitable considerations is entitled to be held to have operated as a release or discharge. The trustee's trust relation to the subject of such a sale prevents his holding the proceeds of it, whether it is all or only part of the agreed price that is paid, freed from the lien which had existed against the thing so dealt with. The rights acquired by the Timber Products Company as against the deed of trust or the trustee to which the installments of the purchase price

were made payable were similar to those it would have had if its purchase had been under a decree for the foreclosure of the deed of trust. If a purchaser at such a sale fails without good cause to complete his purchase, he forfeits any deposit or partial payment he may have made, so far as it may be needed to make up a deficiency in price on a resale occasioned by his default. Camden v. Mayhew, 129 U. S. 73, 9 Sup. Ct. 246, 32 L. Ed. 608; 2 Jones on Mortgages (6th Ed.) § 1644.

[4] There is no evidence in the case from which it could be inferred that the Trust Company consented to release the lien of the deed of trust upon the $18,000 which was paid to it as the first installment of the stipulated purchase price. The language of its consent to the order of the court of bankruptcy under which the trustee of the bankrupt surrendered and renounced all its rights under the contract for the purchase of the lands by no means indicates a consent to relinquish any right which had attached to what was paid by the defaulting purchaser. The terms of that order make it plain that the consideration which moved the court to make it was that thereby the bankrupt estate was relieved of a large and burdensome claim against it. From the failure of the order to say anything about the $18,000 which had been paid to the Union Trust Company, it fairly is to be inferred that the understanding of the court making the order and of all parties concerned in it was that the bankrupt had forfeited that sum by its failure to carry out its contract, and that the Trust Company's right to hold and apply that money was not different from what it would have been if the other installments also had been paid to it. It may be assumed, without being conceded, that the claim asserted by the appellee would have been strengthened if it had been made to appear that on a resale of the land, either by the owner with the consent of the holder of the incumbrance or under a foreclosure decree, it had brought as much as or more than the price stipulated in the contract of sale. No such state of facts is disclosed. On the contrary, it appears that the trustee of the bankrupt purchaser has unconditionally forfeited the sum paid as the first installment of the purchase price, and that from a sale of the property under the foreclosure decree there has been realized a sum greatly less than that of the installments of the purchase price which were not paid. The conclusion is that nothing has happened which properly can be regarded as having the effect of releasing or discharging the lien of the deed of trust which attached to the $18,000 upon its payment to the Union Trust Company. The claim of the appellee is not strengthened by the failure of the Trust Company to apply that sum on the secured debt, or to make any mention of the receipt of it in its foreclosure bill. The recipient of that sum is in court as a party to the pending suit, and the money in its hands is subject to the orders of the court as to the proper application to be made of it.

It follows from the above-stated conclusions that the decree appealed from is erroneous, and should be reversed; and it is so ordered.

SIEG v. GREENE.

(Circuit Court of Appeals, Eighth Circuit. October 5, 1915.)

No. 4348.

1. PARTNERSHIP ⟹68—REAL ESTATE—PARTNERSHIP OR INDIVIDUAL PROPERTY.

Whether real estate bought by the members of a partnership and standing in the name of one or both partners constitutes personal assets of the firm depends largely on what funds were used in the purchase, what use was to be made of the property, and the intentions of the partners at the time.

[Ed. Note.—For other cases, see Partnership, Cent. Dig. §§ 101-111; Dec. Dig. ⟹68.]

2. PARTNERSHIP ⟹68—PARTNERSHIP REAL ESTATE—WHEN TREATED AS PERSONALTY.

Real estate which belongs to a partnership is treated in equity as personal property only so far as it may be needed to pay the debts of the partnership and adjust the equities of the partners.

[Ed. Note.—For other cases, see Partnership, Cent. Dig. §§ 101-111; Dec. Dig. ⟹68.]

Appeal from the District Court of the United States for the Southern District of Iowa; Smith McPherson, Judge.

On motion for rehearing. Motion denied.

For prior opinion, see 225 Fed. 955, — C. C. A. —.

Before SANBORN and CARLAND, Circuit Judges, and LEWIS, District Judge.

LEWIS, District Judge. The petition for rehearing in this case is based on the contention that the land, in which we held that Size had a right of homestead, was partnership property belonging to the firm of Sieg & Size, and that on that account the right of homestead did not and could not exist.

We were not much concerned with that partnership in this suit. It went out of business in 1903 and the new firm of Size & Carpenter, of which appellant was not a member, took over the brick plant of the old firm and thence engaged in the manufacture and sale of brick.

[1] 1. To establish the asserted fact that the lands were partnership assets of the firm of Sieg & Size, the petitioner relies on a brief statement of Size when on the witness stand to the effect that the lands up to July, 1910, belonged to the partnership of Sieg & Size, and also that the title which they held stood in the firm name of Sieg & Size.

If every other fact and circumstance introduced in proof were excluded, the matters relied on to sustain the contention might be prima facie sufficient, although we think it quite apparent that the testimony of Size referred to can have no other effect than a general statement that John A. Sieg and William A. Size were joint owners of the property. It was an opinion at best and could not be taken as a statement of pure fact. Outside of the part of the tract used

for brickyard purposes, the testimony shows that the remainder of the tract, in which it was held the right to a homestead existed, was used for farming. The farming operations on the lands were carried on, so far as the record discloses, in the same way as would ordinarily be done by tenants in common. There is no proof that the farming operations went into the partnership accounts in the operation of the brick plant. There is no proof that the original purchase of the tract was made with partnership funds. There is no proof that the farm lands were in any manner used as a part of or in connection with the brick plant or the manufacture of brick.

And it is of little significance to whom title is taken, whether in the name of one of the partners or in the names of all of them, or in the partnership name, as to whether the property constitutes firm assets. The principal and controlling factors are, with what funds the property is purchased, the uses to which it is to be put, and the intentions of the members of the partnership at the time.

In Paige v. Paige, 71 Iowa, 318, 32 N. W. 360, 60 Am. Rep. 799, the syllabus, borne out by the opinion, reads:

"Real property, bought for partnership purposes, and paid for with the undivided moneys of the partnership, is partnership property, although the conveyance is made to both the partners in their individual names."

Prior cases in that court are cited from which is deduced the rule that where land is purchased with partnership funds, and intended to be used for partnership purposes, it is to be treated as personal assets of the partnership.

In York v. Clemens, 41 Iowa, 95, it is held that if lands be bought with partnership assets for partnership purposes it is partnership property though the title be vested in the name of only one of the parties.

In Bosworth v. Hopkins, 85 Wis. 50, 55 N. W. 424, and Jenkins v. Jenkins, 81 Ark. 68, 98 S. W. 685, it is held that even though lands be bought with partnership funds, if title is taken in the name of one of the partners, the lands may be the sole property of the partner taking the title, if that be the intention of all the parties at the time.

And this court, in McKinnon v. McKinnon, 56 Fed. 411, 413, 5 C. C. A. 530, 534, said:

"It may have been that the purchase was merely an investment of surplus funds, and that it was the intention of the parties to hold the lands as tenants in common, rather than as partnership property. The fact that lands have been purchased during the existence of a firm with partnership money, and that the title has been taken in the name of one of the partners, is but a single persuasive circumstance tending to show that they are partnership assets. It is necessary to further inquire, when the intent of the parties is not manifest, whether the real estate so acquired was used for partnership purposes, or whether the income derived therefrom, and the expenses incident thereto, were carried into the partnership accounts, and treated as partnership matters. It is generally held that these latter considerations are controlling circumstances in determining whether lands purchased with the money of a firm, and held in the name of one partner, are in fact partnership assets."

[2] 2. But we think the contention is based on a misconception, and that the proposition is wholly without the issues in this case. It was not the firm of Sieg & Size and the members thereof which were

adjudged bankrupts, but the firm of Size & Carpenter and its members. The trustee in bankruptcy, appellee here, does not represent the creditors of the firm of Sieg & Size. We do not know that there are any such creditors. We cannot assume that there are. The assets of that firm subject to the payment of its debts belonged to the members thereof. Creditors of the firm of Size & Carpenter have no concern about those assets. And if it be conceded that all of the farm lands were assets of the co-partnership of Sieg & Size, there is no reason here why the individual interests of each partner therein should not have immediately attached in 1903, when that firm ceased to carry on business and thenceforth be held by them as tenants in common.

In Hewitt v. Rankin, 41 Iowa, 35, the court, after announcing the general principle that while the firm is in operation or there are liabilities outstanding against it the individual partners have no interest in its lands or other assets but their interest is only in the stock of the firm and their proportionate shares in the remainder after debts are paid, uses this language:

> "When the business of the partnership is closed, and its debts are paid and there are no equities in favor of third persons requiring real estate of the firm to be held subject to the foregoing rule, the partners, or their representatives, hold a direct interest therein; and, as between them, it is to be regarded as real estate, and subject to all the rules applicable thereto."

In Hoyt v. Hoyt, 69 Iowa, 174, 28 N. W. 500, all that the court determined was that one partner could not as against his co-partner assert a homestead right in a tract of land which was partnership assets. The same court held in Drake v. Moore, 66 Iowa, 58, 23 N. W. 263, that such a right could not be acquired and asserted as against the creditors of the firm.

Real estate which belongs to a partnership is treated in equity as personal property only so far as is necessary and as it may be needed to pay the debts of the partnership and adjust the equities of the partners. Shanks v. Klein, 104 U. S. 18, 26 L. Ed. 635; Riddle v. Whitehill, 135 U. S. 621, 635, 10 Sup. Ct. 924, 34 L. Ed. 282.

The petition is denied.

KEYSTONE COAL & COKE CO. v. PETROVICH.

(Circuit Court of Appeals, Third Circuit. October 28, 1915.)

No. 1946.

1. MASTER AND SERVANT ⟹286—ACTION FOR INJURY TO SERVANT—QUESTIONS FOR JURY.

   Evidence *held* sufficient to require the submission of the case to the jury in an action for injury to a coal miner caused by the breaking of a defective part of a machine with which he was working.

   [Ed. Note.—For other cases, see Master and Servant, Cent. Dig. §§ 1001, 1006, 1008, 1010–1015, 1017–1033, 1036–1042, 1044, 1046–1050; Dec. Dig. ⟹286.]

2. APPEAL AND ERROR ⟹1039—REVIEW—HARMLESS ERROR.

Omission of a material allegation from a statement of claim is not ground for reversal, where the point was not made in the trial court, and the charge properly submitted the issue to the jury.

[Ed. Note.—For other cases, see Appeal and Error, Cent. Dig. §§ 4370–4379; Dec. Dig. ⟹1039.]

In Error to the District Court of the United States for the Western District of Pennsylvania; W. H. Hunt, Judge.

Action at law by Peter Petrovich against the Keystone Coal & Coke Company. Judgment for plaintiff, and defendant brings error. Affirmed.

Robert W. Smith, of Hollidaysburg, Pa., for plaintiff in error.

F. W. Scott, of Pittsburgh, Pa., for defendant in error.

Before BUFFINGTON, McPHERSON, and WOOLLEY, Circuit Judges.

McPHERSON, Circuit Judge. The Keystone Coal & Coke Company is engaged in mining bituminous coal in Westmoreland county, Pa. On November 16, 1912, the plaintiff was injured in the company's employ while operating a coal-cutting machine. The object of this device is to cut a horizontal cleft several feet deep into a seam, in order to loosen the coal and thus make it easier to blast, and also to insure its dislodgement in large lumps.

The machine in question was actuated by compressed air, and Petrovich had had several years' experience as a cutter with machines of the same, or of similar, design. He had been operating this particular machine—or others just like it—for six months before the accident. Two men are needed, a cutter and a scraper. The cutter runs the machine, regulates the power, and exercises general supervision; the scraper stands close to the seam, and clears away the débris that comes out of the cleft. The machine weighs nearly 4,000 pounds, and consists of two parts, the frame, which does not move and rests on the floor of the mine room, and the cutter bar and the engines, which move forward on the frame as the bar penetrates the coal. The cleft is cut a few inches above the bottom of the room. The machine is placed close to the seam, and the frame is braced by a device called a jack-pipe, 6 feet long and 2½ inches in diameter, whose forked base, or prong, straddles a transverse bar on the rear of the frame, and whose other end is forced tightly against the roof of the mine at an angle of about 45°. Without the pipe, the resistance of the coal would not be overcome, and the machine could not cut. The movable part travels along the frame as the bar enters the coal, and as the machine is about 9 feet long before cutting begins, and as the bar may penetrate the seam as much as 6 feet, a gradually enlarging space comes into being between the rear end of the movable part and the rear end of the frame.

The accident took place under the following circumstances: The cutter bar and the engines had moved forward on the frame about 4 feet, when the jack-pipe broke, thus relieving the machine of its brac-

ing or steadying element, and the movable part jerked and then rebounded along the frame, crushing the plaintiff's right leg, which in some manner had got into the space between the frame and the movable section. Immediately afterwards, the blade of the scraper's shovel was discovered to be wedged between the frame and the knives of the cutter bar on the side of the machine opposite to the spot where the scraper had been standing. The plaintiff was extricated by removing the shovel blade with a sledge, and applying the power so as to move the bar and the engines forward.

[1] The only error assigned complains of the court's refusal to direct a verdict in favor of the defendant, and our examination of the record satisfies us that such refusal was correct. The testimony was conflicting in a marked degree, but several witnesses testified substantially as follows:

On November 13 the jack-pipe then in use by the plaintiff bent, and afterwards broke while the blacksmith was trying to straighten it. Thereupon the plaintiff went to the superintendent of the mine and asked for a new one. The superintendent referred him to the machine boss as the person having authority over the machinery, and the latter directed the plaintiff to come back the next morning. On the 14th the machine boss offered him an old and rusty pipe, and when the plaintiff was reluctant to accept it told him there was no new material on hand, and directed him to use the old pipe, saying it was good for 2 or 3 months, and that he (the boss) knew better than the plaintiff. Accordingly the pipe was used that day and also on the next. On the evening of one of these days the plaintiff saw the superintendent again and told him he wanted a new pipe, saying that the one furnished by the machine boss was old and rusty. To which the superintendent replied that he had no new material on hand, and assured the plaintiff that the machine boss would see that he had a new pipe in a few days, directing him to go on with his work meanwhile. On the 16th the pipe broke and the accident happened. The story thus outlined was flatly contradicted, but it was supported by testimony that could not have been withdrawn from the jury, and we are bound by the verdict.

[2] Assuming the foregoing account to be true, therefore, not much is left of the defense. Only two contentions need be noticed: First, that the statement of claim does not aver that the plaintiff used the old pipe relying on the statements made to him by his superiors. This was asserted to be a fatal omission, and in support of the position several Pennsylvania cases are cited, of which Dobra v. Coal Co., 250 Pa. 313, 95 Atl. 465, is the latest. But it does not appear that any such point was made during the trial; the case seems to have been tried on the merits, and—although no specific instruction on this subject was requested—the trial judge did not overlook it, for he said to the jury:

"Ordinarily a servant has no right to operate a machine that is defective, if in the exercise of ordinary observation he believes that the defect is such that it is going to lead to his injury in the use of it. But if the danger is not so imminent or obvious as that he ought not to proceed to use it at all, and ought to refuse peremptorily to use it, yet if the owner says to him, 'Go ahead, that will do for a short time,' and the servant honestly believes in

the assurance of the master, he has a right to use the machine, even though it have a defect in it, if he believes the assurances of the master."

The second contention is that the breaking of the pipe was not the proximate cause of the injury; that the shovel was caught first, and the pipe broke in consequence of this obstruction. But the order of events was also a disputed question, and this, too, was submitted to the jury; the trial judge saying:

"If the pipe did not break until after the shovel had been put in it, and the shovel was the cause of the jumping and the breaking, then the plaintiff could not recover; but if the pipe broke first, and his story is accurate in that respect and it [the machine] fell upon him, then he can recover, provided there was the negligence that I have already endeavored to explain to you, which must be found always as a predicate for any recovery."

The weight of the evidence is not a matter for our determination. Submissible testimony was offered to support the plaintiff's claim, the charge is not objected to, and the finding of the jury is conclusive.

The judgment is affirmed.

GREAT ATLANTIC & PACIFIC TEA CO. v. CREAM OF WHEAT CO.

(Circuit Court of Appeals, Second Circuit. November 10, 1915.)

1. WORDS AND PHRASES—"WHOLESALER"—"JOBBER"—"RETAILER."

A "wholesaler" is one who buys in comparatively large quantities, and who sells, usually in smaller quantities, but never to the ultimate consumer of an individual unit. He sells either to a "jobber," a sort of middleman, or to a "retailer," who sells to the consumer. The quantities bought by the wholesaler may vary from a fraction of a car load to many car loads; it being the character, not of his buying, but of his selling, that marks him as a wholesaler.

[Ed. Note.—For other definitions, see Words and Phrases, First and Second Series, Jobber; Retail Dealer; Wholesale Dealer.]

2. MONOPOLIES ⚷17—DISCRIMINATION—STATUTORY PROVISIONS.

Defendant was engaged in selling under a trade-name purified wheat middlings selected by it and put up in packages. Its whole business covered less than 1 per cent. of the total middlings bought and sold in the country. It decided to sell only to wholesalers, and so announced to the trade, but for a time made an exception as to a particular retailer. It afterwards decided that it would no longer sell to such retailer, and did not thereafter sell to him. *Held*, that this was not unlawful, and such retailer was not entitled to an injunction restraining defendant from refusing to sell its goods to it, and it was wholly immaterial why it ceased to sell to such retailer, as neither the Sherman Act (Act July 2, 1890, c. 647, 26 Stat. 209) nor the Clayton Act (Act Oct. 15, 1914, c. 323, 38 Stat. 730) has changed the rule that a trader may reject the offer of a proposing buyer for any reason that appeals to him, whether it be because he does not like the buyer's business methods, or because of some personal difference.

[Ed. Note.—For other cases, see Monopolies, Cent. Dig. § 13; Dec. Dig. ⚷17.]

Appeal from the District Court of the United States for the Southern District of New York.

This cause comes here upon appeal from an order refusing to grant an injunction restraining defendant from refusing to sell its goods to

---

⚷For other cases see same topic & KEY-NUMBER in all Key-Numbered Digests & Indexes

complainant. The facts are quite fully set forth in the opinion of Judge Hough, which is reported in 224 Fed. 566.

Griggs, Baldwin & Baldwin, of New York City (Martin Conboy, Joseph F. Collins, and Frank A. Clary, all of New York City, of counsel), for appellant.

Joseph J. Baker, of New York City (Rome G. Brown, of Minneapolis, Minn., of counsel), for appellee.

Before LACOMBE, COXE, and ROGERS, Circuit Judges.

LACOMBE, Circuit Judge. Briefly summarized the facts are these: In the production of wheat flour from wheat, there is a sort of by-product, known as "purified middlings." It is produced by every flouring mill in the United States engaged in the manufacture of wheat flour; it is a staple commodity regularly quoted and dealt in in all grain markets. Defendant buys "purified middlings," selecting such as it thinks grade high in quality. Without submitting them to any process or treatment, without adding anything to them, it puts up the middlings which it selects in packages and offers its selection to the trade under the name "Cream of Wheat." That name identifies packages containing middlings of defendant's selection, and it has protected its trade-name for such selection by a copyright covering the carton in which the cereal is packed. Either because it has used good judgment in its selection, or because it has well advertised its trade-mark, it finds a ready market for its packages. Its particular selection, however, amounts to less than 1 per cent. of the total purified middlings bought and sold in this country.

With an exception which will be referred to later, defendant makes no sales to consumers or to retailers, but confines its sales exclusively to wholesalers, to whom it charges two prices, $3.95 per case in car load lots and $4.10 per case in less than car load lots. To each purchaser from it, it sends a circular requesting such purchaser to sell to the retail trade only at a price of $4.50 per case, adding to this request the statement that it does not intend to waive the right to refuse at any time to supply any dealer who shall fail to comply with any request made by it, the infringement of which defendant may deem prejudicial to the interests of the consumer, to defendant's own business, or to the trade at large. Complainant contends that defendant's course of conduct is a violation of the Sherman Anti-Trust Act and that under the recent Clayton Act this suit may be instituted and maintained by complainant.

That branch of the case has been most elaborately argued; it was discussed by the District Judge. We do not find it necessary to go into it, as we are satisfied that complainant is not entitled to the relief now asked for.

[1] As was stated before, defendant has elected not to sell to consumers or retailers, but to confine its sales exclusively to wholesalers. There is nothing unusual about such a course of business, and certainly it is no offense against common law, statutes, public policy, or good morals for a trader to confine his sales to persons who will buy from him in large quantities. A "wholesaler" is one who buys in compara-

tively large quantities and who sells, usually in smaller quantities, but never to the ultimate consumer of an individual unit. He sells either to a "jobber" (a sort of middleman) or to a "retailer"; the latter being the one who sells to the consumer. The "large" quantities bought by the wholesaler may vary greatly—from a fraction of a car load to many car loads; the character, not of his buying, but of his selling, marks him as a wholesaler. If occasionally, in some particular business, this term loses somewhat of its original significance, such manifestly, as the record shows, is not the fact with the business now under consideration.

Upon the proof and the admissions in the record, this complainant is not a wholesaler, but a retailer; it does not confine its sales to retailers, but sells to countless consumers—a package at a time for 12 cents.

[2] Defendant, as we have seen, in the conduct of its business, decided and made announcement to the trade that for reasons sufficient to itself it would sell only to wholesalers. Why, if it chose to do so, it could not make such a rule and adhere to it, we are at a loss to understand. It named the prices at which it would sell to wholesalers, so much in car load lots, so much in less than car load lots. That certainly it had a right to do; the Clayton Act itself expressly recognizes the existence of this right. Under the rule which defendant had legitimately established for the conduct of its own business, complainant could not buy from it, because complainant was a retailer. Nevertheless, for a time, defendant made an exception to its rule, and sold to complainant, under some arrangement, which, as defendant thought, would not make the wholesalers with whom it dealt critical of the exception. On a certain day defendant decided that it would no longer sell to this retailer at all, and since then it has not sold to complainant. There was no contract between the two which bound defendant to sell to complainant for any specified period of time. This suit is really brought to force defendant to continue to sell to this single retailer, as it sells to the wholesalers who trade with it.

Much has been said about the reason why defendant ceased to treat complainant as an exception to its rule; failure of the latter to live up to some arrangement, etc. All that seems to be wholly immaterial. The business of defendant is not a monopoly, or even a quasi monopoly. Really it is selling purified wheat middlings, and its whole business covers only about 1 per cent. of that product. It makes its own selection of what by-products of the milling process it will put up, and sells what it puts up under marks which tell the purchaser that these middlings are its own selection. It is open to Brown, Jones, and Robinson to make their selections out of the other 99 per cent. of purified middlings and put them up and sell them; possibly one or more of them may prove to be better selectors than defendant, or may persuade the public that they are. It is difficult to see how into such a business as that any novel and exceptional rule of law is to be imported. We had supposed that it was elementary law that a trader could buy from whom he pleased and sell to whom he pleased, and that his selection of seller and buyer was wholly his own concern. "It is a

part of a man's civil rights that he be at liberty to refuse business relations with any person whomsoever, whether the refusal rests upon reason, or is the result of whim, caprice, prejudice, or malice." Cooley on Torts, p. 278. See, also, our own opinion in Greater New York Film Co. v. Biograph Co., 203 Fed. 39, 121 C. C. A. 375.

Before the Sherman Act it was the law that a trader might reject the offer of a proposing buyer, for any reason that appealed to him; it might be because he did not like the other's business methods, or because he had some personal difference with him, political, racial, or social. That was purely his own affair, with which nobody else had any concern. Neither the Sherman Act, nor any decision of the Supreme Court construing the same, nor the Clayton Act, has changed the law in this particular. We have not yet reached the stage where the selection of a trader's customers is made for him by the government.

The order is affirmed.

STUART v. BRITTON LUMBER CO.

In re CAMPBELL.

(Circuit Court of Appeals, Fifth Circuit. October 28, 1915.)

No. 2815.

BANKRUPTCY ⟹451—APPEAL TO CIRCUIT COURT OF APPEALS—AMOUNT OF CLAIMS.

Where the claim against a bankrupt's estate, presented and allowed, is for over $2,500, with specific liens as security therefor, the case is properly appealable to the Circuit Court of Appeals, though no one of the liens amounts to $500, and the only contest is as to the right to the liens.

[Ed. Note.—For other cases, see Bankruptcy, Dec. Dig. ⟹451.

Appeal and review in bankruptcy cases, see note to In re Eggert, 43 C. C. A. 9.]

Appeal from the District Court of the United States for the Middle District of Alabama; Henry D. Clayton, Judge.

A claim of the Britton Lumber Company against M. B. Campbell, bankrupt, was allowed by the referee. From a judgment of confirmation, George Stuart, trustee, appeals. Affirmed.

See, also, Stuart v. E. T. Burrowes Co., 227 Fed. 50, — C. C. A. —.

Fred S. Ball, of Montgomery, Ala., for appellant.

Lee H. Weil, J. W. Vardaman, and Davis F. Stakely, all of Montgomery, Ala., for appellee.

Before PARDEE and WALKER, Circuit Judges, and FOSTER, District Judge.

PER CURIAM. In the bankruptcy of Campbell, the appellee, on citation from the referee, filed in the bankruptcy court the proof of its claim in proper form for the sum of $2,603.59; the same being for lumber furnished said bankrupt and used in building some 29 houses

on 29 different lots. To secure its claim, appellee asserted that it had under the laws of Alabama 29 separate liens duly recorded on 29 separate houses and lots belonging to the bankrupt, and prayed that said liens be recognized. The referee allowed the claim, and in passing on the same recognized the appellee's right to the specific liens claimed. Before the referee the amount of the claim of $2,603.59 was not disputed; the only contest being as to the right of the specific liens claimed. On review before the District Court, the referee's findings and conclusions were confirmed.

A motion to dismiss is made, on the ground that an appeal is not a proper remedy for reviewing the action in the lower court in allowing the liens; no question being raised on the review as to the indebtedness itself, and no one of the specific liens amounting to $500. We consider that the claim presented by the appellee was one for $2,603.59, with specific liens as security for the same, and that claim was allowed, and therefore that the case was properly appealable to this court. On the merits we think the case is clearly with the appellee, and we find none of the assignments of error well taken.

Affirmed.

STUART v. E. T. BURROWES CO.

In re CAMPBELL.

(Circuit Court of Appeals, Fifth Circuit. October 28, 1915.)

No. 2837.

Appeal from the District Court of the United States for the Middle District of Alabama; Henry D. Clayton, Judge.

A claim of the E. T. Burrowes Company against M. B. Campbell, bankrupt, was allowed. From the judgment, George Stuart, trustee, appeals. Affirmed.

Fred S. Ball, of Montgomery, Ala., for appellant.

Gustave F. Mertins, of Montgomery, Ala., for appellee.

Before PARDEE and WALKER, Circuit Judges, and FOSTER, District Judge.

PER CURIAM. The questions presented in this case are substantially the same as in No. 2815, 227 Fed. 49, — C. C. A. —, just decided. The appellee's claim in amount and for specific liens was properly allowed.

Affirmed.

ATLANTIC COAST LINE R. CO. v. WINN.

(Circuit Court of Appeals, Fifth Circuit. October 26, 1915.)

No. 2822.

COURTS ⚷405—PREMATURE WRIT—OVERRULING DEMURRER.

Writ of error, sued out by defendant after the overruling of its general demurrer to the declaration in a damage suit, without waiting for final judgment, is premature.

[Ed. Note.—For other cases, see Courts, Cent. Dig. §§ 1097–1099, 1101, 1103; Dec. Dig. ⚷405.]

In Error to the District Court of the United States for the Southern District of Georgia; W. W. Lambdin, Judge.

Action by Mrs. Minnie L. Winn against the Atlantic Coast Line Railroad Company. Demurrer to the declaration was overruled, and defendant brings error. Dismissed.

Peter W. Meldrim, of Savannah, Ga., for plaintiff in error.

Edgar J. Oliver and Francis M. Oliver, both of Savannah, Ga., for defendant in error.

Before PARDEE and WALKER, Circuit Judges, and FOSTER, District Judge.

PER CURIAM. This is a suit brought in the court below to recover damages resulting from a railroad collision. The plaintiff in error, defendant in the court below, filed a general demurrer to the declaration, which on hearing was overruled by the court, whereupon, without waiting for final judgment in the case, the plaintiff in error sued out this writ. For late cases, see Heike v. United States, 217 U. S. 423, 30 Sup. Ct. 539, 54 L. Ed. 821; Sheppy v. Stevens, 200 Fed. 946, 119 C. C. A. 330.

The writ of error is dismissed.

CROWN CORK & SEAL CO. OF BALTIMORE CITY v. BOND BOTTLE SEALING CO.

(Circuit Court of Appeals, Third Circuit. November 3, 1915.)

No. 1943.

PATENTS ⟹328—INFRINGEMENT—MACHINE FOR MAKING BOTTLE CLOSURES.

The Wheeler patent, No. 887,883, for an apparatus for the manufacture of bottle closures, *held* valid, but, in view of the prior art, not infringed by a machine which, in forming the closures, adds the cork member to the other two assembled and heated members, under pressure and without having been heated.

Appeal from the District Court of the United States for the District of Delaware; Edward G. Bradford, Judge.

Suit in equity by the Crown Cork & Seal Company of Baltimore City against the Bond Bottle Sealing Company. Decree for defendant, and complainant appeals. Affirmed.

For opinion below, see 217 Fed. 891.

James Q. Rice, of New York City (C. J. Sawyer, of New York City, of counsel), for appellant.

Melville Church, of Washington, D. C., and Marshall A. Christy, of Pittsburgh, Pa., for appellee.

Before BUFFINGTON, McPHERSON, and WOOLLEY, Circuit Judges.

WOOLLEY, Circuit Judge. This is an appeal from a decree of the District Court of the United States for the District of Delaware, dis-

missing the complainant's bill of complaint, which charged the defendant with infringement of certain letters patent owned by the complainant, relating to the manufacture of "Crown Caps" or closures for sealing bottles containing liquids. The bill charged infringement of three Letters Patent, being No. 792,284, granted June 13, 1905, to the complainant as assignee of William Painter, for Methods or Process of Manufacturing Bottle Closures; No. 887,838, granted May 19, 1908, to the complainant as assignee of William Painter, for Machine for Making Closures for Bottles; and No. 887,883, granted May 19, 1908, to the complainant as assignee of William H. Wheeler, for Apparatus for the Manufacture of Bottle Closures. At the trial, the complainant abandoned the charge of infringement of the two Painter patents, and restricted its charge to claims 1, 4, 6, 7, 23, 24, 25, 26 and 27 of the Wheeler patent, which, together with the inventor's description of his invention, appear in the opinion of the District Court, reported in 217 Fed. 891.

The validity of the patent in suit is not disputed. The defense is non-infringement.

The complainant charges that the defendant's machine produces a Crown Cap or bottle closure of the same design, composed of the same parts, constructed in the same way, and united by the same method and mechanism as the one produced by the machine of the patent in suit. The defendant admits that the closure produced by its machine, both in its parts and in its entirety, is identical with the closure produced by the machine of the patent in suit, but denies that the parts are united by a method or mechanism covered by the patent.

The controversy in this suit relates to the manufacture of the well known "Crown Cap," and involves the mechanism used by the parties in uniting its several known parts. The mechanism relates to the important element of heat employed by both in effecting adhesive union. The complainant assembles three parts of the closure, heats them all while not under pressure, and completes adhesion by cooling them under pressure. The defendant heats two parts of the closure while not under pressure, does not heat the third part at all, or if so, not until after that part is inserted into the cap by pressure, which is maintained during cooling. The controversy relates to the fact of heating the third member by the defendant's machine and the means employed to that end. Before this question can be understood or the issue discussed, it is necessary to recite, with some attention to sequence, the developments of the manufacture of the type of closures to which this suit relates.

The crown cap closure was introduced by the complainant in 1892, and until 1909 was almost exclusively produced by it, to the extent of many million gross annually, under patents presently to be considered.

The basic patent for the crown cap, being No. 473,776, was granted on February 2, 1892, upon an invention of William Painter. This patent is not in the record and has no place in this litigation except to show that the patent upon which the art was based has expired. Though subsequently applied for, there was issued on the same day, upon another invention of Painter, patent No. 468,226, for certain

modifications of the original closure. While the latter Painter patent is not the basic patent of the art, it is the patent that is at the bottom of this controversy. It likewise has expired.

It was disclosed by Painter patent No. 468,226, which, though not precisely accurate, will be conveniently referred to as the original Painter patent, that a crown cap or closure of the type conceived by Painter and now made by both parties to this suit, consists of three members:

1. A thin metal shell having a slightly rounded upper surface and a dependent fluted flange or skirt which locks over a bead on the lip of the bottle, and thus holds it in a sealing position. Throughout the testimony, this member is referred to as the "cap" or "shell."

2. A thin cork sealing-disk which is tightly compressed within the cap or shell, and which, when in use, is pressed down tightly upon the edge of the bottle mouth.

3. A film of an adhesive substance which is interposed between the cork disc and the under surface of the metal shell, the function of which is to cause the cork disc to adhere to the metal shell, so that no metallic taste may be imparted by contact to the liquid contents.

In disclosing the means by which to make such a sealing closure, Painter directed that the metal cap should be coated on its inner side with "an inodorous, tasteless and insoluble liquid-proof material," stating:

"It is to be understood that this resistant or non-corrodible coating need only be a very thin film, and I secure the best results by the use of a *fusible adhesive material*, which is tasteless and odorless—such as thin shellac varnish. * * *

"The combination of a metallic sealing cap *coated inside with a protecting film* and a permeable or porous sealing-disk is a valuable portion of my invention, and especially if the sealing-disk be composed of cork.

"The very hard spots or masses of various sizes and forms found in all ordinary cork will, as hereinbefore indicated, render thin cork disks more or less defective as compressed sealing-disks. * * * I therefore, prior to the application of the disks to bottles, free the disks from said hard spots. In other words, I subject them to a heavy pressure, which breaks or crushes and disintegrates the normally hard masses, * * * *this crushing operation* may be performed prior to the insertion of the disks into the caps; but it is best accomplished *at the time the disk is forced into the cap* the latter having had its interior *already* coated with a film of well dried shellac *and then heated* sufficiently to melt the shellac and render it adhesive. * * *

"A cork disk, as received from the cork-cutting machine, is placed in the cap, *previously coated inside with shellac and well heated* and *then* subjected to heavy crushing pressure in suitable dies, and the edge of the flange is compressed, thereby flattening the inner lower portions of the corrugations and slightly reducing the diameter of the flange at and near its edge. Under this operation, the hard spots in the cork are not only crushed but the cork disk is developed into a concavo-convex form *and it is also well confined in the cap by the melted shellac.*"

Although owning and operating under the original Painter patent and being shown by it the advantage of heating the fusible film in a closure *before* inserting and compressing the cork disk, it does not appear that the complainant ever pursued that method. Between 1892 and the period embraced between 1905 and 1908, which was prior to certain patents granted upon other inventions of Painter and also prior

to the patent in suit, the complainant united the parts of the crown cap by what was known as the oven-baking method. Before the parts were united, they were assembled. A paper disk or collet, bearing upon each side a film of fusible material, was placed within the hollow of the metallic cap, and the cork disk was pressed into the hollow of the cap upon the collet of fusible or binding material. This was done before the binding material was heated or fused, and constituted merely the assembling procedure. With their three parts assembled and in place, the closures were then heated in large quantities in ovens to melt the fusible films on the collet and to cause the cap and the cork disk to adhere. After remaining in the oven a given time at a predetermined temperature, they were taken out and allowed to cool. This constituted the uniting process, and completed the manufacture of the crown cap.

But it developed that in heating the three parts of the closure after they had been assembled, gases would be generated and trapped and held between the members, preventing the union of the members and causing the cork disks to puff, thereby deteriorating their sealing quality. Such defective closures were known as "puffers" and when discovered were discarded as valueless. They comprised about ten per cent. of the product, the remainder being perfectly united by this method. There was thus developed the problem of finding means whereby the several parts of a closure could be firmly and permanently united without entrapping gases between them. While the problem related to but ten per cent. of the entire product, yet as the annual product was figured in millions of gross, the problem was serious.

In 1905, Painter, the pioneer in the art, sought to cure the defect developed in the oven-baking method by a method for which were granted Letters Patent No. 792,284. Under this method, the several parts of the closure were assembled as before. The assembled or "composite closure" was then put under pressure, and while under pressure, was passed through a raceway over a series of burners and heated, and while still under pressure, was passed over cold air jets and cooled. The distinctive characteristics of this method were heating under pressure and cooling under pressure a previously assembled closure.

While this patent was pending, Painter applied for another, and on May 19, 1908, was granted patent No. 887,838 for an improved machine for carrying out the method described by patent No. 792,284. It added nothing in point of method disclosure to the patent to which it related. It was for a machine by which the closure was first assembled, then pressure applied, and while under pressure the closure was heated and then artificially cooled. Neither of these patents, it is said, was commercially successful. At all events, they were not extensively used by the complainant which owned them. Heating and cooling the assembled members of a closure while not under pressure, as pursued in the oven-baking process, and heating and cooling the assembled members of the closure while *under* pressure, as in Painter's 1905 method patent, left still open and unsolved the problem of causing the assembled members of a closure to adhere without trapping air and gases, and without producing puffers.

Aware of the disclosures of the art and of Painter's patents of 1905 and 1908, William H. Wheeler approached the problem and solved it by an invention for which the patent in suit was granted May 19, 1908, being Wheeler patent No. 887,883. This patent is for a machine and not for a method or process. It is in fact a patent for only a part of the machine by which complainant manufactures crown caps, the other part being constructed under a previous patent, being Wheeler patent No. 798,549, for a machine known as a "Crown Cork Feeder." The two parts constitute the whole structure by which the complainant assembles and unites the members of its closure. While the Wheeler patent No. 798,549, is not in suit, its function, though not its structure, has a relation to the structure and function of the patent in suit that requires a brief consideration. This patent is for an assembling machine and nothing more. In this machine, the three members or parts of the crown cap are assembled, that is, the metallic shell is fed to the machine, the fusible collet is placed in the shell, the cork disk is placed in the shell and pressed upon the fusible collet, and the shell is crimped so as to hold the interior members in place. By this machine, no heat is used and no attempt is made to fuse the fusible member and unite the parts. This assembling device performs no function in uniting the members of the closure. It assembles them, and after assembling them, feeds or delivers them to any machine to be united by any method.

In 1908, Wheeler invented the uniting machine, which is the machine of the patent in suit. The aim of Wheeler, by this invention, was to provide a "construction for the *uniting* of the *assembled members* of the closure, which may be added to existing forms of assembling machines," making special reference in the patent to the assembling machine covered by his patent No. 798,549, granted in 1905. Owning both patents, and intending to carry out this idea, the complainant connected the two machines, placed the uniting machine of the patent in suit beneath the Wheeler assembling machine of 1905, and operated them in conjunction. This is important, because the one device of the defendant is both an assembling and uniting machine, while the structure of the complainant is composed of two machines, made under two patents, one of which is an assembling machine under a patent not in suit and therefore not infringed by the device of the defendant, the other of which is a uniting machine under the patent in suit, and to the extent the defendant employs its means, may be infringed by the device of the defendant.

The complainant's machine is described in detail in the Wheeler patent, and only so much of it will be here described as is necessary for comparison with the mechanism and function of the defendant's machine.

After the three members of the closure are assembled in the upper assembling machine of the type of the first Wheeler patent, the "composite closure" produced by that machine, descends through a chute into a heating chamber of the machine of the patent in suit. In this chamber, as in the oven of the old oven method, the entire closure is subjected to a temperature of 320 degrees F. for a period of thirty

seconds, thereby fusing the adhesive member, which melts at 160 degrees F., and thoroughly heating the cork disk member, whereby gas is generated and accumulated between the layers. As the closures descend from the assembling machine and enter the uniting machine, they are successively deposited in inverted position upon the floor of the heating chamber, which is provided with a number of radial grooves for the closures and is continuously rotated. Upon the lower face of the stationary roof of the chamber is a spiral rib that engages the upwardly turned edges of the closures. As the floor rotates, the stationary spiral rib causes the closures to gradually move in their grooves outwardly until they are delivered in succession from the heating chamber or oven upon an artificially cooled ring secured to and rotated with the floor of the heating chamber.

On the surface of this cooling ring are pockets for the closures corresponding with the radial grooves in the floor of the heating chamber, and above each pocket is mounted a plunger, being one of a series of plungers that rotates with the cooling ring. A fixed cam track is provided for the plunger and holds each plunger elevated until, in its transit, it is immediately above a pocket containing a hot assembled closure. Then the plunger is forced down into the closure upon the cork disk, compressing it firmly and holding its three parts under pressure "during almost a full revolution of the machine" and until the opposite end of the cam is reached, when the plunger is elevated and the cooled closure discharged.

The theory of the operation by which Wheeler solves the problem of trapped air and puffed closures appears repeatedly throughout the specification and claims of his patent. It involves uniting in perfect union the members of a closure previously assembled by the machine of the Wheeler patent of 1905, being No. 798,549, or by an assembling machine of any other type. The organization or means employed by the patentee to effect perfect union are several:

1. Heat is the first element employed. Eight of the nine claims of the patent provide means for heating the whole closure, that is, means "for heating the *assembled members* of the closure," of which the cork disk is one. The patentee states and reiterates the importance of heating the cork disk as well as heating the fusible collet. He states that—

"the *assembled parts* of the closure are subjected to heat while in the condition in which they leave the dies of the assembling machine," and that "heat is employed to soften or fuse the protecting or binding medium located between the packing or sealing gasket and the metal cap, and after the *parts are thoroughly heated* they are allowed to cool."

He provides an arrangement—

"in which the heating action *on the members* of any one closure may be continued a sufficiently long time to thoroughly soften the binding material and to *drive out any moisture or air in the material* or between the members."

2. Having provided for thorough heating of every member of the entire closure, Wheeler directs that the heating shall be accomplished while the closure is *not* under pressure, distinguishing his conception from Painter's 1905 method. He states:

"*During the heating action* of the *parts* they are *not* subjected to pressure or to any action which would tend to confine any moisture or air which may be *in the material* or in the *pit-holes or crevices thereof* or pocketed between the members of the closure, but on the contrary, the *assembled parts* are left entirely free for the escape of any moisture or for the escape of the air in expanding."

Thus far he provides means for *heating* the entire closure while *not* under pressure.

3. The remaining means disclosed by Wheeler to produce the adhesive union of the parts of a closure, relate to cooling the heated closure while under pressure.

Wheeler's patent was a success. He solved the problem of trapped gases in assembled closure.

This was the state of the art when the defendant chose to enter it. To what was the defendant entitled? It was entitled to make a crown cap in design and of members and material identical with that made by the complainant, the patent covering such a cap having expired. It was free to make it in the way disclosed by Painter, the original inventor, because Painter's monopoly ended with the life of his patent, and his invention then belonged to the world.

Upon entering the art, with what was the defendant confronted? While it was free to unite an assembled closure without pressure by the old unpatented oven method, it was confronted with the known faults of that method. It was likewise confronted with the Painter patents of 1905 and 1908, which, for whatever they were worth, prevented it uniting the parts of an assembled closure by heating and cooling them under pressure. Wheeler's assembling patent of 1905 was a barrier to the use of the best known method of assembling the parts of a closure, and Wheeler's uniting patent of 1908 foreclosed to the defendant the method of uniting the parts of an assembled closure by heating while not under pressure and by cooling while under pressure. In a word, the entire art as disclosed by the defective oven method and the later Painter and Wheeler patents, contemplated uniting by heat, either with or without pressure, the parts of a previously assembled closure, and these were the only known methods of uniting the parts of a closure, unless, indeed, the original Painter patent disclosed another. So, upon entering the art, the defendant found that all known means for solving the recognized problem of entrapped gas in assembled closures were either defective or pre-empted. What did the defendant do? The known mechanism to solve the great problem being forbidden it, the defendant set about to devise a mechanism that avoided the problem to which the mechanism of its predecessors related, and in doing this it went back to the original Painter patent long expired. From that master of the art the defendant learned several things, that in order to unite the members of a closure, it was not necessary to assemble and bind them together before heating them; that in fact it was not at all necessary to heat every member; that the fusible member alone might be heated before inserting the cork member, and that after heating the fusible member, the unheated cork member might be compressed upon the fused member, and a

union established. But it is contended that Painter's method did not effect perfect union. That may be true, and if the defendant followed Painter, the union effected by its machine may likewise be imperfect. But this is unimportant, if the defendant followed Painter, for the defendant was free to employ Painter's method, whether the union it produced was perfect or defective. It is also contended that in disclosing his method, Painter did not state that his purpose was to prevent the trapping of gases and the puffing of closure, yet if Painter's method did prevent such trapping and puffing, the defendant was free to follow it whether Painter intended it or was ignorant of it, if the defendant followed it by means not patented by Wheeler. It is insistently urged that while Painter disclosed an order and method for uniting the members of a closure, he disclosed no means to carry his method into practice. This is unimportant, if the defendant followed the steps in Painter's order by means of its own.

And lastly, the defendant is charged, not with infringement of a patented method of the complainant, for it had none, but with appropriating and infringing the mechanism of the Wheeler patent to make effective the method it employed. Here we reach the real issue.

What is the mechanism by which, in one machine, the defendant assembles and united the parts of a closure?

In the machine of the defendant, the empty metal shells are placed in an inverted position upon a rotating dial. This dial carries the shells through a raceway, and delivers them one by one to successive pockets in a second rotating dial, which brings the shells in succession beneath a device for cutting the fusible adhesive substance and placing the collets within the shell. Each shell, with a collet of fusible adhesive substance loosely placed within it, is carried around by the same dial until it strikes an incline by which it is shunted into one of the pockets of a third rotating dial, each successive shell containing its adhesive substance thus passing from one dial to the other. The shells on the third dial are carried in succession under a device for heating the adhesive substance so as to soften it. This heating device is simply a blow-pipe burner, having three downward jets, which play but an instant upon the fusible collets as they pass beneath them. Gases generated by the heat pass freely into the air, as the cork disk has not as yet been placed in the shell to bind or entrap them. As the shells pass in succession from under the burners, the adhesive substance in each now being fused and the gases therefrom escaping in transit, they are again deflected into pockets of another rotating dial, which is the fourth and the last dial upon which the closures are placed. Over this dial is suspended a pile of unheated cork disks held in an upright tube. The cork disks descend and pass one at a time into pockets in the surface of a rotating carrier, by means of which they are brought in succession to a point immediately over the path of the metal shells containing the fused binding material. A battery of plungers is provided, one plunger arranged above each pocket of the dial carrying the shells with their fused adhesive material. This battery rotates with the dial at the same speed. Neither the dial upon which the closures are last placed nor the battery of plungers

is artificially cooled. A cam track serves to hold the plungers elevated until it ends abruptly at a point where a suspended cork disk and a metal shell beneath come for an instant into alignment. As the head of the plunger runs off the cam track, a plunger is snapped down, causing it to instantaneously drive or thrust the cold cork disk into the metal shell upon the previously heated and softened adhesive substance and the plunger remains in its depressed position for a period of "somewhat less than three seconds" "until the plunger has made about half a revolution" and reaches a point where it rides up on the cam track and releases the now cooled and finished closure.

No one of the elements in the mechanism or organization of the complainant's machine is independently patented by the Wheeler patent. That patent is for an organization or apparatus intended to start with a given product, and by a certain orderly procedure or succession of steps to accomplish a given result. It starts with an assembled closure. Therefore, it starts with the problem which every such closure carries shut up within it.

The machine of the defendant likewise comprises an organization or apparatus intended to accomplish a given result by a certain, and, it is claimed, by a different procedure or succession of steps. It starts not with an assembled closure, in every one of which is inclosed a problem, but with only one member of the closure, which is the open shell. This is the first step of assembling in the defendant's machine. It then places a fusible collet within the hollow of the shell. This is the second assembling step. To this point there is no question of infringement, because to this point the defendant has done nothing but assemble two members of the closure, while Wheeler's uniting machine starts with the whole closure assembled.

The first step under the Wheeler patent is the application of heat, which is the third step in the order of things pursued by the defendant. Wheeler heats for thirty seconds, at a temperature of 320 degrees F., the three members of the closure, and for different purposes. He heats the collet to fuse the adhesive, and he heats the cork disk to expel gas from its interstices and to make it more readily adhesive. By its third step, the defendant heats the fusible collet likewise to melt the adhesive. It heats it while it is in transit and but for an instant, using but a fraction of a second instead of the thirty seconds. It therefore employs a higher temperature. It does not directly heat the cork disk at all. Whether it heats it indirectly for the several purposes for which Wheeler heats it and by means equivalent to those employed by Wheeler, is the heart of this controversy.

The complainant contends that the defendant heats the cork disk to the same temperature, by substantially the same means, and for the same purposes as Wheeler heats it, and that it heats both the fusible collet member and the cork disk member while not under pressure, which is the essence of the Wheeler patent, contending that in heating the shell and fusible collet under a temperature of between 2,000 and 2,500 degrees F. and passing them while so highly heated under a cold cork disk suspended but three-eighths of an inch above them, the

cork is heated by radiation to the point at which the cork disk is heated in the Wheeler heating chamber before it is compressed by the plunger into the molten fused adhesive. The complainant claims that in heating the fusible collet and then an instant later heating the cork disk by radiation from the collet, instead of heating the two together as in the Wheeler patent, there is a change in time and location of the heating of the two members that makes the difference in the defendant's procedure wholly one of form; that it utilizes the function of the Wheeler device and appropriates the substance of that invention in heating both the collet and the cork before pressure is applied.

This argument is somewhat weakened by the further contention of the complainant that any deficiency in heat transmitted to the cork by radiation is supplied by contact with the fused collet when the cork is driven upon it by pressure of the plunger. The Wheeler patent does not include but expressly disclaims heating under pressure.

Recognizing that the mechanism of every machine patent, whether broad or narrow, is entitled to some range of equivalents, and comprehending that the heating of the cork member, as well as the other members of the closure, before pressure is applied, is the essence of the Wheeler invention, we must inquire first whether the defendant heats its cork member, and, if so, whether it heats it in the way and for the purposes disclosed by Wheeler.

Under the Wheeler patent, the cork member is heated in an asbestos lined heating chamber for a period of thirty seconds at a maintained temperature of 320 degrees F. It is so heated for two purposes: First, to make it readily adhesive when brought in contact with the molten adhesive medium; second, to expel air and gases from its crevices. It is heated on its upper and lower sides and through and through.

The defendant's device has no mechanism for heating the cork disk. But it is charged that it heats it, nevertheless. The fusible collet is passed under three gas jets of a temperature of from 2,000 to 2,500 degrees F. It is claimed by the complainant that the collet is subjected to this extraordinarily high temperature so as to carry to the cold cork the quantity of heat it would receive in the Wheeler heating chamber in thirty seconds. Every dial of the defendant's device is continuously in motion. No arrangement is made or is possible by which the collet can be slowly heated under low temperature; the very speed with which it passes the heating point, which is a fraction of a second, requires heat of a high temperature to fuse the adhesive and keep it fused while it passes through the air to the point where it receives the cork disk. So a very high temperature is applied. What happens from the instant of the application? When the shell, with its fused collet, passes from beneath the flames it begins instantly to cool. It passes from the heating dial to the compressing dial, and travels some distance with the molten adhesive exposed to the temperature of the open air, until it reaches a point immediately beneath and in perfect alignment with a cold cork disk, which is instantly thrust down into the molten mass. At this point pressure begins, and the complainant's claim of a patent monopoly for heating without pressure ends.

Although the heated collet continues its transit and does not stop an instant anywhere, it cannot be denied that during "the very small fraction of a second" the fused collet is beneath the cold cork disk, some heat is transmitted to it by radiation. What heat is thus transmitted reaches principally, if not entirely, the under side of the disk. It certainly does not impregnate the whole disk as is done during the thirty seconds of heating in the chamber of the Wheeler device, and does not heat it to a temperature by which gases are generated throughout the body of the disk and expelled from its cracks and crevices. We are of opinion that what heat is thus transmitted is incidental and without purpose, or, as stated in the testimony, is "a wholly negligible amount," and neither by intent nor result constitutes the step taken by Wheeler in heating the cork disk purposefully, continuously and thoroughly. So much for heating the cork disk *before* impact and pressure. Now, what happens when the plunger thrusts the relatively cold cork disk into the fused material of the collet? The answer may be the same thing that happened when Painter, in 1892, thrust a cold cork disk into the fused adhesive material. Of course, some heat is transmitted from one to the other. No cold substance can be thrust against a hot substance without the transfer of some heat units from one to the other; but the heat thus transmitted does not permeate the cork disk and drive out the gases from all of its cracks and crevices, which was the cardinal thing intended by Wheeler in heating the cork disk for a long time. The heating of the cork disk by contact with and pressure upon the fused adhesive, whatever the temperature may be, is no help to the complainant in this litigation, for it produces a condition not only inconsistent with the claims and description of Wheeler's patent, but distinctly condemned by Wheeler, who particularly pointed out that—

"if the pressure takes place before or *simultaneously* with the heating, any air contained in the pit-holes or crevices of the packing (i. e. cork disk) or between the members of the closure, or any moisture present on or about the members (i. e. cork disk) may, by expanding, tend to separate the parts and prevent them from uniting perfectly under continued pressure."

If the cork disk in the defendant's device is highly heated by compression into the fused adhesive, such heating *under pressure* might be claimed to be equivalent to heating under the pressure disclosed by the Painter patents of 1905 and 1908. As these have been withdrawn from this suit, and as heating under pressure is distinctly disclaimed by the patent in suit and declared by the patentee to be an improper method of heating the cork disk, no infringement can be found in the defendant's device in so far as heating is effected at the instant of pressure and subsequently thereto.

That the cork disk in the defendant's device is not as highly heated as the cork disk in the complainant's, is further proven by the testimony that notwithstanding the much higher temperature to which the defendant's adhesive is for an instant subjected, it takes "somewhat less than three seconds" or "one-half revolution of the plunger" at atmospheric temperature, to cool the whole closure, while in the complainant's machine, it takes "almost a full revolution of the plunger"

artificially chilled by sprays of cold water or jets of compressed air to cool the closure.

We are of opinion that Wheeler intended to heat the cork disks thoroughly, as stated by him in his specification, and that the defendant did not intend to heat them at all, except at the instant of impact as disclosed by Painter. In the defendant's device, when the plunger thrusts the cork disk into the shell, it completes its last step of assembling and performs its first act of physically uniting the parts of the closure. In other words, in assembling the closure, the defendant stops where Wheeler starts, and in uniting the closure, both stop by continuing the applied pressure for the purpose of cooling. Therefore, it seems to us that the defendant has not employed the complainant's heating means either to the extent in which Wheeler uses it, upon the parts which Wheeler requires, or for the purpose which Wheeler discloses. The defendant cannot be charged with appropriating the complainant's heating means.

The question remaining is whether the defendant can be charged with infringing the Wheeler cooling means. Both the complainant and the defendant employ means for cooling closures under pressure. The original Painter patent followed by the defendant provided for pressing an unheated cork disk upon hot adhesive matter in order to secure union by adhesion, but did not disclose the advantage of continued pressure during cooling. In the Wheeler device the plunger that descends to compress the three members of the closure is permitted to remain down for thirty seconds. In the defendant's device, the plunger that drives in place the cold cork disk upon the hot adhesive remains in place "somewhat less than three seconds." In each device, the plunger remains down a sufficient time to effect adhesion. Painter early disclosed the necessity of pressure to produce adhesion.

Wheeler claims no patent upon the plunger device, and of course has no monopoly of the element of cooling. The organization to produce perfect adhesion, for which a patent was granted, included, as one of its steps, means to cool under such pressure, but such means, as a separate or independent invention, were neither patented nor invented by Wheeler. They were embodied in Painter's patented inventions of 1905 and 1908. If in the cooling means of the defendant's machine infringement exists at all, it is infringement of the withdrawn patents and not of the device of the patent in suit.

Our conclusion is that the device of the defendant does not infringe the device of the complainant, either with respect to means for heating or cooling, because in entering the art the defendant avoided the problem of the complainant by avoiding a practice that created the problem. It is presumed to have known what the art disclosed. Among other things, the art disclosed the problem of entrapped gases between members of an assembled closure. It proceeded to assemble the members of a closure in an order and to heat the one member that required fusion at a time when gases could not be entrapped and when they were free to escape into the air. In thus avoiding the problem, the defendant avoided the necessity of solving it and established an order of assembling and uniting the members of the closure entirely

different from that employed by Wheeler, and precisely like the order disclosed by Painter in his original patent, so far as the number of the steps disclosed by Painter was used by the defendant.

We find nothing in the litigation in the Second Circuit concerning the Wheeler patent that bears upon or is decisive of the issue in this case, excepting so much of the decree as affirms the validity of the Wheeler patent. We likewise hold the patent valid, but also hold that it is not infringed by the device of the defendant.

The decree below is affirmed.

NORTH AMERICAN CHEMICAL CO. v. KENO SUPPLY CO. (two cases).

KENO SUPPLY CO. v. NORTH AMERICAN CHEMICAL CO.

(Circuit Court of Appeals, First Circuit. October 14, 1915.)

Nos. 1117-1119.

1. PATENTS ⟹328—INVENTION—PROCESS OF FILLING SHOE BOTTOMS.
The Thoma patent, No. 808,224, for the art of filling shoes, *held* void for lack of invention.

2. PATENTS ⟹328—VALIDITY AND INFRINGEMENT—SHOE-FILLING APPARATUS.
The Arnold patent, No. 808,227, for a shoe-filling apparatus, *held* void for lack of invention, and also not infringed.

3. PATENTS ⟹328—VALIDITY AND INFRINGEMENT—SHOE BOTTOM FILLER.
A decree affirmed, which holds valid and infringed the Thoma patent, No. 832,002, for a shoe bottom filler.

4. PATENTS ⟹167—CONSTRUCTION—REFERENCE TO SPECIFICATION.
Claims in a patent are frequently explained, and must necessarily be explained, by reference to the specification; but claims which are lacking in the definiteness or clearness required by statute cannot be thus made good.
[Ed. Note.—For other cases, see Patents, Cent. Dig. § 243; Dec. Dig. ⟹167.]

Appeals from the District Court of the United States for the District of Massachusetts; Frederic Dodge, Judge.

Suit in equity by the North American Chemical Company against the Keno Supply Company. From the decree, both parties appeal. Affirmed.

The following is the opinion of Dodge, District Judge, in the court below:

Three United States patents are in suit in this case, all owned by the plaintiff company. They are No. 808,224, issued December 26, 1905, to Andrew Thoma; No. 808,227, issued on the same day, to William B. Arnold; No. 832,002, issued September 25, 1906, to Andrew Thoma. All three were applied for on the same day, August 28, 1905.

The first-named patent (808,224) has 8 claims in all, and the bill alleges that 6 are particularly infringed by the defendant—Nos. 1, 3, 5, 6,

⟹For other cases see same topic & KEY-NUMBER in all Key-Numbered Digests & Indexes

7, and 8. The second (808,227) has 10 claims; 2 of them, Nos. 1 and 8, being specified as particularly infringed. The remaining patent (832,-002) has 37 claims; 10 of them, according to the bill, Nos. 1 to 4, 6 to 10, and 14, being the ones particularly infringed.

No. 832,002, last mentioned, is for "shoe filler package and process of making the same." In his disclosure the patentee, Thoma, states that he has obtained the best results by mixing certain ingredients, in specified proportions, in a manner he describes, but has also found a number of means of attaining his object, all of which are not disclosed. The plaintiff calls this a patent covering a compound or manufacture, and speaks of it as the "product patent."

No. 808,224, also issued to Thoma, is said to cover the art of applying the filler of No. 832,002 to shoes, and the plaintiff speaks of it as the "process patent."

No. 808,227, to Arnold, is for an "improvement in shoe-filling apparatus," is said to cover the apparatus used in applying Thoma's filler to shoes by Thoma's process, and is spoken of as the "machine patent."

[1] The product of No. 832,002 being thus involved in the inventions described in the other two patents, it will be convenient to consider that (the "product patent") first. The specification is prolix, not always clear, and contains much unnecessary repetition. Its most important features may be stated in substance as follows:

The patentee begins by stating that the filler in common use at the time of his invention is made of comminuted cork mixed with rubber cement (rubber dissolved in naphtha). He refers at this point to United States patent to Howland No. 458,421 (1891), which describes a filler so composed. He then sets forth the disadvantages attending its use, as follows:

The volatile nature of the naphtha in the rubber cement requires a supply to be made fresh for each day's work, and involves large evaporation loss.

There is difficulty in handling the mixture so as to keep "the cement and adjacent articles clean."

The danger of fire from evaporating naphtha—perhaps the greatest disadvantage.

The mixture dries so slowly as to retard the work of the entire factory.

It soon becomes dry and brittle in the shoe, causing the latter to wear unevenly.

The patentee's filler, it is then said, cannot evaporate, nor lose its elastic, waterproof, etc., qualities by reason of age, but remains in proper condition, and adherent to the leather, during the life of the shoe. It can be made into convenient, portable package shapes, though not hard or solid, so as to be supplied ready made and stored until used, and it can be heated and cooled repeatedly without losing its characteristics. It has a low melting point, and cools or sets rapidly when spread thin on the damp shoe bottom. The patentee's object is stated to be:

"To do away with the delay of the slow-setting rubber cement filler, and with the objectionable features thereof due to the use of, and the evaporating of, the naphtha solvent."

How he attains his object is then disclosed. About five parts gutta percha, three parts resin, and two parts paraffin oil are mixed and subjected to a melting heat, which disintegrates the gutta percha and unites it with the resinous part. The mixture, rendered thin and smooth in two to four hours, by this means, is then thoroughly mixed with ground cork, or the like, and, being strongly adhesive, affords an excellent elastic medium between the cork granules. Cork or any other substance adapted to give body to the mass, and capable of elastic yielding in all directions, may be used. Instead of gutta percha, other vegetable gums (some of which are named), or low grade rubber, to some extent, may be used. The oil being varied in amount, according to their quality and its own quality, it may be either vegetable or mineral oil and either thick or thin.

The mixture is spread out in thin layers, partially cooled, then gathered into small quantities, compacted into loaf form, kept under pressure until stuck together in a mass, preferably compressed again when slightly cooler, and then provided with an external coating of ground cork, or other material capable of becoming part of the loaf which will adhere without sinking in, thus leaving the loaf not sticky enough to prevent ready handling, yet capable of being put into the melting pot just as it is.

One of the most important results of the invention, according to the patent, is the provision of a "portable ever-ready filler, having the characteristics mentioned." The "two most important distinguishing features" of the invention are later said to be: (1) The filler is unchangeable in character, instead of becoming brittle and non-sticky; (2) it is quick-setting, without becoming hard.

The patentee regards his invention as "broadly novel in certain particulars as pointed out in the claims," and therefore wishes it understood that in those particulars he is not limited to the preferred binder described.

Thirty-seven claims follow. Nos. 1 to 14 are for a shoe bottom filler consisting of a mass having characteristics described, or composed of a base and a binder having characteristics described.

All the claims said to be particularly infringed are claims included in this group. Nos. 15 to 32 are for a shoe bottom filler in the form of a self-contained loaf which is described in a variety of ways, and Nos. 33 to 37 are for the described process of making a self-contained loaf of shoe filler. No claim belonging to either of the two last-mentioned groups is specified as particularly infringed.

The defendant compounds the filler which it sells by employing a binder for its comminuted cork composed of the following ingredients: Resin, 9 pounds; pontianac resin, one-fourth pound; asphalt, 1½ pounds; brown pitch, 1½ pounds; oil, 8 pounds—these being the quantities used for each 12 pounds of cork. The above proportions are slightly varied according to circumstances. It does not appear that the defendant makes its filler into or sells it in the form of self-contained loaves like the plaintiff's. The method of mixing the ingredients does not differ materially from the patentee's method. The resulting compound is put into cartons or boxes, each holding 5 pounds.

The defendant thus omits the gutta percha of the formula whereby the patentee says he has obtained the best results, using instead more resin and pontianac resin. The patentee has stated that other vegetable gums, pontianac among those he names, may be used instead of gutta percha. The asphalt and brown pitch, which are added in small proportion, fall under the description of mineral oils. The defendant, like the plaintiff, has provided a binder for its cork base without using an ingredient containing naphtha, and has thus done away with the delay due to the slow setting of a mixture containing naphtha, and the objectionable features due to its evaporation. It substitutes, for certain ingredients in the patentee's preferred mixture, only well-known equivalents. I see no reason to doubt that it makes its filler by what is in substance the method of the patent; and, restricting the claims in issue to a shoe-bottom filler produced according to the disclosure of the patent, I think they are infringed if they are valid. It does not seem to me that the patentee's described method of making a shoe bottom filler can fairly be said to be anticipated by the prior patents to Petersen (1882), Grunzweig (1889), or Goodall (1891). In neither of these is the production of a compound adapted for use in filling shoes contemplated, nor does either appear to show how such a compound may be made.

The plaintiff contends for a construction of the claims in suit much broader than that above indicated. It insists that the invention patented is "of a pioneer character," and that, especially since this is true, the patentee is entitled to claim his product "identified by its physical characteristics"; thus covering every article possessing the specified characteristics, without regard to the ingredients which compose it or the method whereby it is compounded.

I do not find sufficient ground to believe that the invention described in this patent is properly to be regarded as "pioneer" in character, or that the product thereof is "new" in the sense necessary to support the plaintiff's contention. So far as appears from the disclosure of the patent, the patentee did no more than show how to make a filler free from the disadvantages he mentions involved in the use of fillers containing naphtha. Except for those disadvantages, the rubber cement filler does not appear to have been unsatisfactory. The evidence affords reason to believe that, apart from them, it was little, if any, inferior in any essential respect to that produced by the patentee, provided that the rubber cement was of the best quality and free from adulteration. What the patentee provided, therefore, was an improved filler, but not one sufficiently superior in quality or different in kind from anything before known to justify calling it a new filler, or regarding the patentee as first in a new field of invention.

That the use of rubber cement fillers has been almost everywhere abandoned in favor of a filler made and sold by the plaintiff under the name of "Besto" may be regarded as proved. But it has also appeared that the binder employed in making "Besto" contains hardly any of the ingredients mentioned in the patent and is not prepared according to the method therein described. It is made mainly of "wax tailings," or the resinous residuum of petroleum, rendered properly elastic by the addition of a very small amount of paraffin oil, and, according to the

disclosure of a later United States patent issued to Thoma July 30, 1907 (No. 861,555), for an improvement in innersole fillers. Thoma's application for this patent was filed May 15, 1905. It further appears that the plaintiff has made and sold fillers according to the patent in suit only to a limited extent, having almost immediately substituted "Besto," because "wax tailings" cost so much less than gutta percha; also that "Besto" has been preferred by purchasers who formerly used rubber cement filler because it was so much cheaper. In view of all the above, the undisputed commercial success of "Besto" affords little reason for crediting the patentee with the invention of a new filler, or with having been a pioneer inventor. The quick disappearance of the old rubber cement filler as soon as purchasers were able to obtain "Besto" is fully accounted for by the fact that the new filler was cheaper and answered the purposes of the old filler without involving the use of naphtha, and is no indication that the new filler was also regarded as superior in other respects.

Thoma states, in his "Besto" patent No. 861,555, that it is subordinate to his copending application for his patent No. 832,002, now under consideration, and that he has therein—

"placed the broad claims which are generic to the several different varieties of shoe filler, * * * the present case being restricted to the species of my filler which depends upon the resinous residuum of petroleum or sticky wax tailings."

This is another way of stating the claim he makes here, that the invention described in the patent under consideration is of a character which entitles him to cover every composition for filling shoes, however made or from whatever materials, if only it, or the base or the binder employed in it, can be said to have such qualities as the claims in suit mention. Claim 9, which may be taken for an example, is as follows:

"A shoe-bottom filler, consisting of a permanently plastic, quick setting, waterproof mass adherent to leather, and composed of a finely comminuted filler material whose granules are thinly coated with a tenacious, tough binder, which is rendered temporarily highly fluid by moderate heat."

No decision is found in which it is held or recognized that the product of a described process, whether it be called a manufacture or a composition of matter, can properly be claimed in terms like these, so as to cover every product to which the same terms are capable of application. If there are any circumstances in which such claims for a product could be held valid to their full extent, I am unable to believe that they can be so treated in a case like this, where the invention is, at most, of an improved filler, not of one wholly different in kind from any that preceded it. In American, etc., Co. v. Howland, etc., Co., 80 Fed. 395, 400, 25 C. C. A. 500, upon which the plaintiff relies, it was held that the patentee's claims for an improved pulp digester, covering, among other things, a continuous lining "of cement," without specifying the kind of cement, were not limited to ordinary hydraulic cement, or to the particular cementitious mixtures he had chemically and commercially isolated as individuals, but were to be construed as including all such mixtures as ordinarily skilled chemists might be expected to find as answering the described conditions. Not only does this fall far short of

what is required to sustain the plaintiff's contention, but the patentee's conception in that case was wholly new. He had "discovered a new property or force in matter"; i. e., that cement or cementitious mixtures generally would adhere to the iron shell of a digester, resist hot acid, and protect the shell therefrom. Thoma cannot be said to have made any discovery of such character. In view of the fact that he appears to have devised and disclosed an improvement of value, I do not regard the character of his claims in suit as sufficient ground for holding them invalid, as the defendant contends; but I cannot give them a construction broader than that adopted above.

[2] Coming next to the "process patent," No. 808,224, the patentee declares in his specification that, besides providing a filler which will neither evaporate, cave in, cling to the tool, or remain moist and refuse to set indefinitely, he has devised a method which makes the shoe absolutely waterproof, gives it "a high degree of pliability and elasticity or resiliency of tread," securing at the same time the main advantages of quick setting, perfect adherence to the leather, even if damp, economy, uniformity, and neatness. He refers to the Arnold machine (being the machine of patent No. 808,227), which he says has been invented for carrying out his method commercially.

What is to be done in carrying out his "method" is next stated. The first step is to prepare—

"a filler of any suitable materials which will be permanently pliable, will not evaporate, will adhere firmly and permanently to leather or the like, and be semi-solid when cold, and freely plastic or semi-fluid when properly heated, and will be quick setting, such a compound being formed of a mixture of comminuted cork, gutta percha, resin, and paraffin oil (about five parts of the gutta percha to three of the resin and two of the oil), and when these are thoroughly mixed under heat the resulting filler may be permitted to stand indefinitely."

The next step is to provide a suitable machine or mechanism; the Arnold machine being shown in the accompanying drawings, and referred to as an instance of such a machine.

Having provided the filler and mechanism as above, pails, contained in the steam-jacketed top of the machine, are filled with the filler and heated by turning steam into the steam jacket. The filler in the pails, being thus melted, is turned in this condition into a dip pot, also contained in the steam-jacketed top. The melted filler in proper quantity is taken from the dip pot and spread upon the inner sole of the shoe into the cavity to be filled. The body of filler thus placed in the cavity is pressed against a roll kept hot by the steam which heats the steam jacket, being admitted thereto through a pipe forming the axis of the roll. By this pressure against the hot roll the outer surface of the filler in the cavity is "superheated," the binder of the filler is caused to flow or spread laterally into all corners of the cavity and in the sewing of the shoe, so as to form tight joints, the top surface of the filler compressed, smoothed, and leveled, and the filler spread by the vertical pressure of the roll, not only so as to fill all crevices, needle holes, etc., but so as to adhere to the bottom and sides of the cavity. The shoe is then ready to have its outer sole attached in the usual manner.

The patentee then declares that a shoe thus constructed has "permanent solidity" and even wearing qualities, a high degree of resiliency and pliability, is permanently waterproof, in comparison with "the old construction," is equally light, less expensive, and more quickly made, and that its construction, being "performed under heat," gives a "homogeneous character" to the parts, which, when subjected to pressure under heat, are all bound together by the filler.

The patentee next restates the advantages possessed by his filler, in virtue of the fact that there is no naphtha in it, in much the same terms as used in his "product patent."

He concludes by stating that he wishes it understood that he is not limited to the mechanical details shown, that the ingredients of his filler may be varied, that he has several fillers meeting the requirements of his method, that that filler and other details are covered in other applications, and that this is limited to the art or method forming part of his "new system of shoe manufacture."

Apart from the patented filler of No. 832,002 and the patented machine of No. 808,227 (below considered), I can find no patentable novelty in what this patent discloses. Whatever else the patent describes amounts to nothing more, so far as I can see, than causing plastic materials which heat will soften to fill a cavity by pressure with a heated tool. This seems to me an obvious mechanical process, involving no inventive idea, given the patented filler, whether Arnold's or any other "suitable" machine be used in carrying it out. Finding nothing patentable in the described method of putting the filler into the shoe, I hold this patent invalid.

[3] Finally, as to the Arnold patent, No. 808,227, the apparatus therein described, as has been stated above, consists of a steam-jacketed table, comprising steam-jacketed compartments, each to receive a filling pot for melting the Thoma filler and closed by a cover, and containing also an adjacent shallow dip pot, above the rear end whereof is the roll above mentioned in considering patent No. 808,224. This is heated by steam, which passes into and heats the steam-jacketed table through a pipe whereon the roll turns as its axis. The patent calls the roll a "superheating tool," and declares that it constitutes the most important feature of the invention by reason of its position close to the delivery end of the dip pot. The roll is so shaped as to have a surface in part straight, in part concave, and in part convex, so that the shoe may be pressed against either as required to give the filler the exact surface and compression desired. On the top of the steam-jacketed table, conveniently near the dip pot and roll, is an arrangement into which dip knives used in spreading melted filler on the shoe may be thrust, when not in use, and kept hot by being pressed against the heated surface of the table, so as to have a heated knife always at hand for use in transferring filler from the dip pot to the shoe, without chilling it by the use of an unheated knife.

The two claims said to be particularly infringed are:

"1. In a shoe-filling apparatus, means for supplying hot filler for a shoe, and superheating means mounted close to the delivery end of said supplying means for instantly applying a superheated contact over the top of the filled surface of the shoe."

"8. In a shoe-filling apparatus, a heated dip pot for supplying hot filler for a shoe, a stand provided with a superheating tool mounted close to the open end of said pot in position to permit the shoe, when filled, to be freely and instantly manipulated in pressing engagement with said superheating tool, and quick-heating means at one side of said dip pot for heating the dip knives used for applying the filler from to pot to the shoe."

I am unable, notwithstanding the presumption in favor of the patent and the plaintiff's argument, to believe that this patent describes anything more than an aggregation of familiar devices, each performing its separate function and accomplishing its separate result in substantially the same manner and to substantially the same extent as if they had not been brought together in one structure resting on the same support. Each is separately and successively used. I can see no result which can properly be regarded as due to their combined operation. It is doubtless highly desirable to have the melted filler close to the hot roll against which it is to be pressed when on the shoe, and to have the dip knives kept hot in a place close to the filler supply and the roll; but juxtaposition is not combination. It is true that the patentee not only brings the separate devices close together, but also supplies them all with heat from the same steam. This, however, does not seem to me enough to make any substantial difference. In bringing the separate devices together as above, I think it clear that nothing beyond ordinary mechanical skill was required, and nothing which can fairly be called invention involved.

I am obliged to consider this patent invalid for want of patentable invention. I should be unable, in any event, to treat the claims as covering anything except the particular structure shown and described. So construed, they are not infringed. The defendant's steam-jacketed kettle has no roll, but has a portion of its outer surface flat, and kept hot, of course, by the steam within the jacket. The operator, having filled the shoe with heated filler from the kettle, presses the filler into the shoe by wiping or smoothing it against this flat portion of the heated kettle.

The claims in suit of patent No. 832,002 are therefore held valid and infringed by the defendant. The claims in suit of the other two patents are both held invalid. There may be a decree accordingly.

W. Orison Underwood, of Boston, Mass., for plaintiff.
Francis J. V. Dakin, of Boston, Mass., for defendant.

Before PUTNAM and BINGHAM, Circuit Judges, and ALDRICH, District Judge.

PUTNAM, Circuit Judge. This case depends upon alleged infringement of three patents for invention. The first is No. 832,002, application filed on August 28, 1905, and patent issued on September 25, 1906, to Andrew Thoma. This is for the filler, and is entitled "Shoe-Filler Package, and Process for Making the Same," and is spoken of in the District Court as being for the "product." The next patent was issued to the same Andrew Thoma on December 16, 1905, on an application filed on August 28, 1905, entitled to be for "the art

of filling shoes," and is spoken of as for the "process." The third patent was issued to William B. Arnold on December 26, 1905, on an application filed on August 28, 1905, and is entitled as for "shoe-filling apparatus," and said to be "the machine or machinery," and is also said to cover the apparatus. All three are supposed to relate to the same art.

The opinion of the learned judge of the District Court in these cases was passed down on February 6, 1915. It sustained the bill so far as patent No. 832,002 was concerned, and entered thereon an interlocutory decree for an accounting and an injunction. On the other patents, namely, 808,224 and 808,227, being one for the process, and the other for the machine or machinery, the bill was ordered to be dismissed, with costs. Both parties appealed to this court.

[1, 2] The learned judge of the District Court gave the case a very thorough and elaborate consideration, and passed down a correspondingly thorough and elaborate opinion. So far as patents Nos. 808,224 and 808,227 are concerned, this court agrees with that opinion, and the facts stated and the reasoning of the court are so full that it is the work of supererogation to go over the matter in detail, or do more than accept its conclusions in reference thereto, and so far as those two patents are concerned we accept that opinion as the opinion of this court, and reaffirm the judgment entered by him without further detail.

[3] With reference to patent No. 832,002 our views are not entirely harmonious with those of the District Court, and therefore we state them to some extent. There had been a great deal of shifting with reference to the claims in that patent, with many amendments of a substantial character. It all came down finally, so far as we are concerned, into the following claims, Nos. 1, 2, 3, 4, 6, 7, 8, 9, 10, and 14:

"1. A shoe bottom filler, consisting of a base united with a binder into a permanently tenacious, quick-setting, permanently elastic mass, capable of being molded into a thin pliable layer filling the shoe bottom.

"2. A shoe bottom filler, consisting of a normally unchangeable, permanently elastic, quick-setting mass, composed of a base capable of yielding in all directions to pressure, united with a permanently sticky component.

"3. A shoe bottom filler, consisting of a normally unchangeable, permanently elastic, quick-setting mass, composed of a base capable of yielding in all directions to pressure, united with a permanently sticky component having a low melting point.

"4. A shoe bottom filler, consisting of a normally unchangeable, permanently elastic, quick-setting mass, composed of a base capable of yielding in all directions to pressure, united with a permanently sticky component having a low melting point and serving to render said mass waterproof."

"6. A shoe bottom filler, consisting of a resilient base united with a viscous binder into a permanently tenacious, quick-setting, permanently elastic, and water repellant mass, capable of being molded into a thin, pliable layer, filling the shoe bottom.

"7. A shoe bottom filler consisting of a normally unchangeable, permanently elastic, quick-setting mass, composed of finely comminuted filler material, having each granule thinly coated with a permanently sticky binder, capable of being rendered highly fluid by moderate heat.

"8. A shoe bottom filler, consisting of a filler body in a fragmentary condition, thoroughly mixed with a binder into a permanently tenacious, quick-setting, permanently elastic, and moldable mass of a nonshifting consistency when cold.

"9. A shoe bottom filler, consisting of a permanently plastic, quick-setting, waterproof mass adherent to leather, and composed of finely comminuted filler material whose granules are thinly coated with a tenacious, tough binder, which is rendered temporarily highly fluid by moderate heat.

"10. A shoe bottom filler, consisting of filler material in a fragmentary condition, and a binder which is permanently elastic, quick-setting, and permanently sticky; said fragmentary filler material and binder being thoroughly mixed together in the presence of heat for use in filling the shoe."

"14. A shoe bottom filler, consisting of comminuted filler material, held compactly together by a permanently flexible, viscous binder, in a permanently elastic mass of a consistency suitable for filling in the cavity between the inner sole and the out sole of a shoe; said mass having a low melting point and being compressible and resilient when cold."

This patent was finally left with claims numbered 1 to 37; but the case was accepted by the District Court as standing on the claims which we have copied. The other claims were accepted by it as not essential to this litigation, probably because they were not in their terms infringed, as they were more specific, in that they described somewhat particularly various articles which went into the combinations, as, for example, five parts of gutta percha, and three parts of resin, and two parts of paraffin oil were enumerated as "binders," while comminuted cork was given as the filling; but we have nothing to do with this as the case stands before us. It now rests entirely on the claims which we have quoted, and which contain no practical express enumeration of the various substances which enter into the product, or of the quantities of these substances, or of any of them. It will be seen that, in the claims so said to be in issue, there is an entire absence of all such specific proportions or elements, and that everything is left standing upon its qualities as described in them, with nothing whatever to enable any one ordinarily skilled in the art to determine the proportions or qualities required, except by experiment. Therefore, so far as these claims are concerned, the case is subject to the rule fully determined by many decisions of the Supreme Court, and given in Walker on Patents (4th Ed.) § 178, as follows:

"The statutory requirements, relevant to particularity in the descriptions and claims of letters patent, are conditions precedent to the authority of the Commissioner of Patents to issue such documents; and, if such a document is issued, the description or claims in which do not conform to these requirements, then that document is void."

In this patent the patentee seems to be confused between the "process" and the "product," and he confused the title of the patent accordingly. All that is left now is the "product"; but it is a "product" whose usefulness depends upon the proportions of the various elements contained in it. Therefore, they need the same particular and plain statement as they would if they related to "process."

The reason of this rule is convincing, and in the eyes of the law the rule is a simple one; but its application in practice is sometimes very difficult, as shown in Wood v. Underhill, 5 How. 1, 5, 12 L. Ed. 23, which was a case of the "composition of matter," or "product," where the two courts differed. In the case at bar, which with reference to the claims which absolutely lack any statement of any specific proportions, it is plain that the application of this rule is difficult, because the specification deals at great length with numerous elements neces-

sary to be taken into consideration before it can be determined that the generic expressions in these claims which we have copied are capable of any certain application, or any application except one involving experiments by persons who are only ordinarily qualified in the art, or the use of the spirit of invention.

[4] We have already said that the case rests entirely on the claims. To speak accurately, we should say that the case rests on the claims according to the language which they have used, and that the claims in the language in which they are expressed cannot lawfully be applied by drawing on the specification. The claims, of course, in a patent, are frequently explained, and must necessarily be explained, by reference to the specification; but claims which are lacking in definiteness, or clearness, in the way to which Mr. Walker refers, cannot be thus made good. The claims must stand as good or bad by a determination based on the ordinary rules of interpretation.

The court below seems to have gone outside of the claims for the purpose of finding an interpretation for them, and seems to have accepted the invention intended to be covered, not merely by reading the claims under the ordinary rules of interpretation, but by supplying that in which the claims are absolutely lacking—precision and definiteness. Nevertheless we have carefully examined the positions of the respondent, and we do not find that the claims were asserted to be defective or void by reason of the propositions to which we have referred; so that, notwithstanding what we have said in reference thereto, we do not feel justified here in assuming to be wiser than the parties, or assuming to declare claims void for reasons not asserted. Consequently we have been compelled to draw out from the opinion of the court below for what reason it held this patent valid.

This seems to come down to the proposition contained in the opinion as follows, referring therein to the inventor, namely:

> "In view of the fact that he appears to have devised and disclosed an improvement of value, I do not regard the character of his claims in suit as sufficient ground for holding them invalid; but I cannot give them a construction broader than that adopted above."

This apparently refers to the following paragraph in the opinion of the court, namely:

> "No decision can be sound in which it is held or recognized that the product of a described process, whether it be called a manufacture or a composition of matter, can properly be claimed in terms like these so as to cover every product in which the same terms are capable of application. If there are any circumstances in which such claims for a product could be held valid to their full extent, I am unable to believe that they can be so treated in a case like this, where the invention is at the most of an improved filler, and not of one wholly different in kind from any that preceded it."

The effect of all this seems to be that the District Court held that it could not sustain the patent to the full extent of the language of the claims which we have cited, but found that the patent contained something narrower in its practical effect than what is called for by the language of the claims as read without restriction. In other words, the opinion seems to have gone through the whole state of the art and

the circumstances explained in the specification, and gathered from the whole what it found to be new. Therefore; while we make out that, after all, the language of these claims may be insufficient, within the rule which we have cited from Mr. Walker, yet, in view of the fact that neither the court below nor the respondent stands on propositions of that character, we feel that it is going beyond the province of this court to assert such a proposition, which plainly involve serious difficulties.

We apprehend, however, the difficulty arising from the fact of sustaining the patent on a narrower reading than the natural reading of the claims in controversy, and that under the circumstances the invention, as we are sustaining it, is a narrow one, while the claims themselves are perhaps broad. It is therefore necessary for us to caution the profession and the public that the patent is always to be read and interpreted in the manner in which the learned judge of the District Court interpreted it, and not with a mere reference to some possible interpretation which may be put on the claims.

The decree of the District Court is affirmed, and neither party recovers any costs of appeal.

BINGHAM, Circuit Judge, concurs in the result.

UNDERWOOD TYPEWRITER CO. v. E. C. STEARNS & CO. et al.

(Circuit Court of Appeals, Second Circuit. July 20, 1915.)

No. 270.

1. PATENTS ⟹318—INFRINGEMENT—ACCOUNTING FOR PROFITS.

On an accounting for profits for infringement of a patent for a tabulating attachment for a typewriting machine so constructed that it may be attached to or removed from the machine without interfering with its use as a typewriter, complainant is not entitled to recover all of the profits made by the infringer on the entire machine, but to such only as are shown to be legally attributable to the tabulators; and where the infringing device was also patented, and was an improvement on that of the patent in suit, recovery should be limited to the profits derived from the use of the infringing, as distinguished from the noninfringing, elements of the tabulators sold, if apportionment is possible.

[Ed. Note.—For other cases, see Patents, Cent. Dig. §§ 963-969, 971; Dec. Dig. ⟹318.]

2. PATENTS ⟹319—ACCOUNTING FOR INFRINGEMENT—DAMAGES.

While damages are recoverable for infringement, regardless of whether or not profits have been allowed or have been made by the infringer, damages cannot be awarded, without evidence either of lost sales or to establish a royalty basis for their recovery; and the court cannot assume that, if defendant had not sold the infringing machines, complainant would have made the sales, especially where there were other and large competitors in the field.

[Ed. Note.—For other cases, see Patents, Cent. Dig. §§ 293, 970; Dec. Dig. ⟹319.

Accounting by infringer for profits, see notes to Brickill v. Mayor, etc., of City of New York, 50 C. C. A. 8; Clark v. Johnson, 120 C. C. A. 389.]

---

3. APPEAL AND ERROR ⟹266—PRESERVATION OF GROUNDS OF REVIEW—MASTERS—EXCEPTIONS TO REPORT.

No exceptions to a master's report, not taken before the master, can be raised in an appellate court.

[Ed. Note.—For other cases, see Appeal and Error, Cent. Dig. §§ 1552–1565, 1568–1571; Dec. Dig. ⟹266.]

4. PATENTS ⟹287—SUIT FOR INFRINGEMENT—JOINT LIABILITY.

Where one defendant manufactured infringing articles, some of which were bought by its codefendant, conducting an independent business, and resold at its own prices, neither defendant is liable for the infringement by the other.

[Ed. Note.—For other cases, see Patents, Cent. Dig. §§ 853, 856; Dec. Dig. ⟹287.]

Appeal from the District Court of the United States for the Southern District of New York.

Suit in equity by the Underwood Typewriter Company against E. C. Stearns & Co. and the Typewriter Inspection Company. From the decree, complainant appeals. Affirmed.

This cause comes here on appeal from a final decree entered on November 3, 1913, in the United States District Court for the Southern District of New York. The Underwood Typewriter Company is a corporation organized and existing under the laws of the state of New York, and is the owner of United States letters patent No. 436,916, issued on September 23, 1890, as well as letters patent No. 452,268, issued on May 12, 1891, to J. B. Gathright for improvements in typewriting machines. E. C. Stearns & Co. is, in like manner a corporation organized and existing under the laws of the state of New York, and is charged with infringing the above patents. The Typewriter Inspection Company bought and sold Stearns machines in New York City, but had no agency contract with the Stearns Company. The Stearns Company had its factory at Syracuse, N. Y., and began to manufacture in 1902 the Stearns typewriters, although the machines first came on the market in a commercial way about 1906. This was only one branch of its business. The tabulator complained of was put on the machines when first made. The Stearns Company found the business of manufacturing typewriters a constant loss, but continued in their manufacture, hoping to retrieve its losses, until some time in 1912, when that part of its business was abandoned, because too much money had been sunk in the attempt to carry it on successfully.

Patent No. 436,916 and patent No. 452,268 were held valid by this court in Wagner Typewriter Co. v. Wyckoff, Seamans & Benedict, 151 Fed. 585, 81 C. C. A. 129 (1907). The name of the Wagner Company was subsequently changed to that of Underwood. The defendant in that case was found to have infringed letters patent No. 436,916 by the use of a tabulating mechanism on the well-known Remington typewriter. After that decision, the bill of complaint was filed, an injunction issued, and the matter was referred to a master to take and state an account of profits and damages. The master reported that complainant had proven no damages as against either defendant; that complainant was not entitled to any profits from E. C. Stearns & Co., as that company had made no profits from the sale of infringing machines; and that complainant was entitled to recover the nominal sum of $1 as profits as against the Typewriter Inspection Company.

The case coming on to be heard upon the report of the master and upon the exceptions taken to the report by complainant, the District Court ordered and decreed that complainant should have judgment and execution against the Typewriter Inspection Company for the sum of $1,328, with interest from June 2, 1913, together with its costs, but in all other respects confirmed the master's report.

Arthur v. Briesen and Fred A. Klein, both of New York City, for appellant.

Alfred Wilkinson, of New York City (Julian C. Harrison, of New York City, of counsel), for appellees.

Before COXE, WARD, and ROGERS, Circuit Judges.

ROGERS, Circuit Judge (after stating the facts as above). There is no question of infringement involved here. It is not disputed that the Stearns visible typewriters, provided with what are known as tabulating attachments, infringe the Underwood typewriters. The matter we have to consider is the right of the Underwood Typewriter Company to recover from the defendants profits and damages, because of this established fact of infringement. An interlocutory decree was entered on April 20, 1908, referring the matter to a master to take and state an account of the profits and damages as to letters patent No. 436,916; and on August 4, 1908, a further interlocutory decree was entered, which directed him to take and state an account of profits and damages as to letters patent No. 452,268. The master filed his report on May 15, 1913. The first of these patents expired September 23, 1907, and the other on May 12, 1908. An injunction against further infringement on the first patent was issued and in force from April 1, 1907, to its expiration, and on the second patent from April 22, 1908, to its expiration. The period of accounting is practically three years; the first infringing machine having been shipped in April, 1905, and the last in April, 1908. Testimony at considerable length was taken and exhibits were offered.

The questions involved were very carefully presented before the master by full arguments and elaborate briefs on both sides. His report is unusually careful and exhaustive as to the facts, covering 37 printed pages, and it is not necessary to review it in detail. He found that 2,365 typewriters containing the infringing tabulator were made by the Stearns Company, of which 2,282 were sold and 7 were used; that the receipts from the sale of the infringing machines amounted to $133,483.61; and that the cost of the machines amounted to $180,413.19. No profits had been made by the Stearns Company, but there was a loss of $46,929.58. He also found that the Typewriter Inspection Company received from its sales of infringing machines $4,470, that the cost to that company of the machines sold amounted to $3,042, and that the profit realized by the company amounted to $1,328.[1]

The master also reported the number of machines with the modified tabulator sold by each of the defendants and the receipts from the sale of such machines. Those sales we do not need to consider, inasmuch as in the opinion of the master concurred in by the court below and by this court, the machines with the modified tabulator did not infringe. The original tabulator on the Stearns machines having been found to infringe the plaintiff's patent, a modification of it was made by sawing off the lug to which the bar which operated the connect-

[1] This is plainly a clerical error, which escaped the notice of the court below and of counsel in this court. The amount should have been $1,428.

ing lever was fastened, removing the lug, the arm, the connecting lever, and the screws which held the lever in position. The removed parts were destroyed, and the screw holes plugged, so that after the expiration of the plaintiff's patents entirely new parts had to be made, and were made, to replace those which had been destroyed. The defendant acted in the matter in entire good faith and upon the advice of careful counsel. There is no analogy between what was done in this case and what was done in Underwood Typewriter Co. v. Elliott-Fisher Company (C. C.) 156 Fed. 588 (1907), where the modification consisted in merely detaching temporarily a part, so disconnecting the mechanism of the tabulator that the operation of the tabulator lever would not simultaneously release the carriage detent. The Elliott-Fisher Company kept the part which it temporarily removed, and either sent it with the machine, thereby leaving the purchaser free to immediately replace it, or kept it in an envelope ready to be sent, and with the purpose of sending it to the purchaser upon the expiration of the patents. In this case the mutilated structure, as the court below observed, by reason of location of remaining parts, lacks the facility of operation which was found in the machine of the Elliott-Fisher Company.

On the filing of the master's report the court below concurred with the master in holding that no decree could be entered against the Stearns Company for profits or damages; that company having made no profits and no damages having been proven. It decreed that that company should have judgment and execution against the plaintiff for its costs. The court disagreed with the master in thinking that only nominal damages should be awarded against the Typewriter Company, and adjudged that the plaintiff have judgment against that company for the sum of $1,328 (that being the profit the master reported the company had made), with interest from June 2, 1913 (the date of the filing of the master's report), together with its costs.

A patentee whose patent has been infringed has a right to file his bill in equity to recover the amount of gains and profits that the infringers have made by the use of his invention. This rule was established by a series of decisions under Patent Act July 4, 1836, c. 357 (5 Stat. 117), although that act simply conferred upon the courts of the United States general equity jurisdiction, with the power to grant injunctions, in cases arising under the patent laws. See Tilghman v. Proctor, 125 U. S. 136, 144, 8 Sup. Ct. 894, 31 L. Ed. 664 (1888). The motive of the infringer of patented rights is taken away by requiring him to pay the profits of his labor to the owner of the patent. The profits made by the infringer of a patent belong to the patentee, and it is not consistent with the ordinary principles of equity to allow a wrongdoer to profit by his own wrong.

In Elizabeth v. Pavement Co., 97 U. S. 126, 138, 24 L. Ed. 1000 (1877) Mr. Justice Bradley, speaking as to profits recoverable in equity by a patentee, says:

"The subject, as a whole, is surrounded with many difficulties, which the courts have not yet succeeded in overcoming. But one thing may be affirmed with reasonable confidence: That, if an infringer of a patent has realized no

profit from the use of the invention, he cannot be called upon to respond for profits. The patentee, in such case, is left to his remedy for damages. * * * It may be added that, where no profits are shown to have accrued, a court of equity cannot give a decree for profits, by way of damages, or as a punishment for the infringement. Livingston v. Woodworth, 15 How. 559 [14 L. Ed. 809]."

The principle announced is the principle which the master and the court followed as respects the Stearns Company. No error can be found in the conclusion that the plaintiff can claim nothing in the way of profits from that company, as no profits were made.

[1] The master reported:

"That under the rule laid down by Judge Wallace in the Air Brake Case the complainant, unless it could prove the profit made upon the tabulator itself, as distinguished from a mere proportionate part of the profits on the whole machine, would have been limited to a nominal recovery."

As such profit had not been shown, he reported that the plaintiff was entitled only to a nominal recovery of $1 as against that company. By his reference to the "Air Brake Case" the master undoubtedly had in mind Westinghouse v. New York Air Brake Co., 140 Fed. 545, 72 C. C. A. 61 (1905). That case was decided by this court, and it was held that, in determining the profits and damages recoverable for infringement of a patent for a device which constitutes only one feature of the machine or structure sold by defendant, it is the settled rule that the burden of proof rests on the complainant to separate or apportion defendant's profits between the patented and unpatented features and by evidence which is reliable and tangible, or he must show by equally satisfactory evidence that profits and damages should be calculated on the whole machine, for the reason that its entire value as a marketable article is properly and legally attributable to the patented feature. In that case only a nominal recovery was allowed, although the master had found that defendant's profits amounted to $36,945.

Now it is evident that in the case at bar the infringement complained of is of a patent for a device which constitutes only a feature of the machine or structure sold by the defendant. The patent is for a tabulating attachment so constructed that it may be attached to or removed from a typewriting machine without interfering with its use as an effective typewriter. The patentee in his specification stated that his object was to provide means for automatically locating with the typewriter one or more columns of words or figures and of mechanically skipping any intervening space desired to be left blank. Prior to his invention, when the operator desired to do tabulating work, it was necessary to advance the carriage by repeatedly striking a spacing key or by unlatching the carriage and sliding it to the desired point by means of a hand lever. Both of those methods were tedious, irritating, and perplexing, and the patentee sought to obviate them by his device. It certainly cannot be claimed that the entire value of the Stearns machines was due to the infringing tabulator. No claim of that kind was advanced before the master, and no attempt was made to establish the fact by any evidence that was adduced. What-

ever evidence there is in the record tends to prove that the contrary was the fact.

The tabulator had no effect on the ordinary use of the machine. It could be taken away from the machine without in the least affecting its utility for all the ordinary daily uses. It was claimed that most operators never used the tabulator at all, and that in doing ordinary column work many operators did not use the tabulator, even when it was on the machine. The defendant's catalogues and folders, which are in evidence, show that the tabulator is only one of a number of the claimed advantages of the Stearns machine. Some of the advantages thus claimed are merely additions to the machine for special purposes, like the tabulator, while others go to modifications in the general structure of the machine, or in parts necessary for its operation. The manager of the Oliver Typewriter Company testified that they did not attach tabulators to their machines unless they were specially desired; that the sale of their typewriters had gone to the hundred thousands, but that the sales of the tabulators had amounted to nothing. The manager of the Royal Typewriter Company testified to a similar experience, and that their machines were sold at the same price with or without a tabulator, and that "it is only an occasional happening" when a purchaser wanted a tabulator attached to the machine. The rule applied in the Air Brake Case is the rule the Supreme Court previously laid down in Garretson v. Clark, 111 U. S. 120, 4 Sup. Ct. 291, 28 L. Ed. 371 (1884). In that case Mr. Justice Field, speaking for the court, said:

"The patent was for an improvement in the construction of mop heads, which may be described, with sufficient accuracy, as an improvement in the method of moving and securing in place the movable jaw or clamp of a mop head. With the exception of this mode of clamping, mop heads like the plaintiff's had been in use time out of mind. Before the master, the plaintiff proved the cost of his mop heads, and the price at which they were sold, and claimed the right to recover the difference as his damages. This rule was rejected; and, no other evidence of damages being offered, the master reported as stated. When a patent is for an improvement, and not for an entirely new machine or contrivance, the patentee must show in what particulars his improvement has added to the usefulness of the machine or contrivance. He must separate its results distinctly from those of the other parts, so that the benefits derived from it may be distinctly seen and appreciated. The rule on this head is aptly stated by Mr. Justice Blatchford in the court below: 'The patentee,' he says, 'must in every case give evidence tending to separate or apportion the defendant's profits and the patentee's damages between the patented feature and the unpatented features, and such evidence must be reliable and tangible, and not conjectural or speculative, or he must show, by equally reliable and satisfactory evidence, that the profits and damages are to be calculated on the whole machine, for the reason that the entire value of the whole machine, as a marketable article, is properly and legally attributable to the patented feature.' The plaintiff complied with neither part of this rule. He produced no evidence to apportion the profits or damages between the improvement constituting the patented feature and the other features of the mop. His evidence went only to show the cost of the whole mop and the price at which it was sold."

The doctrine of Garretson v. Clark, was reasserted in Westinghouse Electric & Manufacturing Co. v. Wagner Electric & Manufacturing Co., 225 U. S. 604, 32 Sup. Ct. 691, 56 L. Ed. 1222 (1912), and again

in Dowagiac Manufacturing Co. v. Minnesota Moline Plow Co., 235 U. S. 641, 35 Sup. Ct. 221, 59 L. Ed. 398 (1915). In the latter case it was explained that in an apportionment of the profits mathematical exactness is not indispensable, and that reasonable approximation is what is required, which usually may be attained through the testimony of experts and persons informed by observation and experience.

In Yesbera v. Hardesty Manufacturing Co., 166 Fed. 120, 92 C. C. A. 46 (1908) the case being before the Circuit Court of Appeals in the Sixth Circuit, Judge Severens, in referring to the Garretson Case, says: "The unanimity with which infringers seek the shelter of that case is something remarkable." But in his opinion Judge Severens points out that the Garretson Case related to a patent for an improvement, and not to one for an entirely new machine or contrivance, and stated that in his opinion the rule was not to be applied to the infringement of patents of all descriptions but only to patents for an improvement. But the patent involved in the case at bar is a patent for an improvement, and the rule of that case is applicable to the case at bar, unless there are other circumstances which distinguish it.

The court below, in its memorandum opinion awarding to the plaintiff the whole profit made by the Typewriter Inspection Company, instead of the nominal recovery allowed by the master, did so with the simple remark that "it seems under some of the authorities entitled" to such a judgment. No authorities were cited, and this brings us to inquire under what circumstances a patentee is entitled to claim all the profits made by the infringer. That question was before the Supreme Court in Westinghouse Electric & Manufacturing Co. v. Wagner Electric & Manufacturing Co., supra. The principles laid down in that case are that the patentee is entitled to all the profits: (1) Where a patent, though using old elements, gives the entire value to the combination. (2) Where profits are made by using an article patented as an entirety, unless the infringer can show, and the burden is on him, that the profits are partly the result of some other things used by him. (3) Where the patent admittedly creates only a part of the profits, so that the patentee would be entitled only to that part, if he could apportion the profits and show by reliable and satisfactory evidence either what part of the profits are attributable to his patent, and the infringer, by commingling the elements, renders it impossible for the patentee to meet the requirements of apportionment. In such a case, as in that of a trustee ex maleficio confusing gains, the loss should fall on the guilty and not on the innocent. In the above case the defendant claimed that the infringing transformers contained elements of the patent which were not embraced in the claim alleged to be infringed, and that no profit due to those elements could be recovered, unless the plaintiff apportioned the gains due solely to the claim infringed.

It is not seriously claimed that the Stearns machine infringes the Underwood machine as an entirety. There is no single patent covering the whole of either the Stearns or the Underwood typewriting ma-

chines. There are some 8 separate patents on the Stearns machine and 43 on the Underwood. But each of these machines has a tabulator attachment, and to that the infringement is confined. The Stearns Company used the tabulator patented by Schneelock, while the Underwood Company used the tabulator or "column stop" of the Gathright patent. As the infringement does not extend to the entire machine, it does not seem equitable that the infringer should relinquish all the profits made on the sale of his machines, especially when, as in this case, he has not been a willful infringer. The ends of justice are served if he is obliged to turn over to the patentee of the infringed tabulator the portion of the profits due to the use of the infringed device if that can be ascertained. In this case that would not be the profit derived from the tabulator as a whole, but only that portion of the profit attributable to that part of the tabulator which infringed the plaintiff's tabulator device. And the burden rested on the plaintiff to show that a profit was derived from the use of the tabulators as a whole, and also to apportion, if possible, the profit derived from the use of the infringing as distinguished from the noninfringing elements of the tabulators. If that had been made impossible by the act of the infringer, then the infringed could properly claim the whole profit, realized from the use of the tabulators. But to establish the principle that one who has acted in good faith and has derived a structure which is an advance over the prior art, but who has in a minor particular technically infringed, must give up not only the profits due to the use of the device, but the entire profits realized from the sale of any machine which makes use of it, although it may be a very insignificant part of the machine, does not accord with one's ideas of justice and of equity.

The burden was on the plaintiff to show that the infringing defendants made profits, and to show what portion of those profits was due to the use of the tabulators; if possible, what portion of the profits realized from the use of the tabulators was due to the use of his patent as distinguished from the other features of the tabulator. If that could not be shown, because of the act of the infringer in mingling the elements of plaintiff's tabulator with those of his own, then the plaintiff was entitled to claim the whole profit realized from the use of the tabulator. As a matter of fact, it is doubtful upon the evidence in this case if the tabulators really added greatly to the marketable value of the machines. But, whether they did or did not, it is clear that whatever value they may have added was not due solely to the feature of the Gathright tabulator which the Schneelock tabulator infringed. Schneelock improved upon the Gathright structure and developed the decimal tabulator, avoiding the inconvenience of the extra adjustment necessary in the use of the Gathright device, so that by a single movement the machine arrived at the desired column. This he accomplished by the depression of the tabulator key alone, without further manipulating of the carriage. This result was obtained by providing a number of slots at the front of the machine corresponding one to each column up to one million, and by a mechanism whereby the stop is adjusted latterly to correspond, so that by

moving the single key latterly into the desired position and then depressing it into the correct slot the carriage by that movement alone is released and stopped at the exact point or space required.

Whether the infringer did so commingle the elements as to relieve the complainant from the duty of apportionment it is not necessary to inquire. The court below evidently thought that the circumstances did relieve the complainant from that duty, and so awarded to it the entire profits made by the Typewriter Inspection Company, and that company is not objecting in this court to that part of the decree, but asks that it be affirmed.

[2] We come, now, to the matter of damages. No damages were allowed either by the master or the court below. The plaintiff in its exceptions to the master's report insists that he erred in failing to find $65,560 damages suffered by plaintiff from the sale of the infringing machines made by the Stearns Company, and in the assignment of errors the court is said to have erred in failing to find substantial damages by reason of the manufacture and sale of the infringing machines. Act July 8, 1870, first authorized courts of equity to allow damages in addition to profits. And the Revised Statutes in section 4921 (Comp. St. 1913, § 9467) provide that:

"Upon a decree being rendered in any such case for an infringement, the complainant shall be entitled to recover, in addition to the profits to be accounted for by the defendant, the damages the complainant has sustained thereby; and the court shall assess the same or cause the same to be assessed under its direction. And the court shall have the same power to increase such damages, in its discretion, as is given to increase the damages found by verdicts in actions in the nature of actions of trespass upon the case."

On an acounting for infringement of a patent, defendant's profits and complainant's damages are distinct from and independent of each other. They are governed by different principles, and the allowance of one does not preclude recovery of the other. Beach v. Hatch (C. C.) 153 Fed. 763. And it does not follow that no damages are recoverable because no profits were realized. Indeed, the fact that no profits were made may make it less difficult to assess the damages, as the law does not permit a duplication in damages of what has been received in the shape of profits. Yesbera v. Hardesty Manufacturing Co., supra. But the difficulty in the case at bar is that complainant has offered no proof that can seriously be considered as entitling it to any recovery for damages. Damages cannot be awarded unless there is a ground on which a recovery of damages can be based. And this record discloses no such ground. The Stearns Company was never a competitor with the plaintiff in anything more than name. The plaintiff was making some 50,000 machines a year and the Stearns Company less than 900. It has not been shown that the infringement by either defendant caused the slightest injury to plaintiff's business. No proof has been introduced that the plaintiff's sales were diminished by any cause during the infringing period. If there had been proof of lost sales, then proof would have been necessary as to the actual money loss caused by the lost sales, and there is no proper or sufficient proof of the cost of manufacturing of complainant's machines, or of the net amount for which they were sold, and from which plain-

tiff's profit could be calculated. Moreover, the plaintiff made no attempt to prove an established royalty as a basis of damages. Its claim is based on the assumption that, if purchasers of the Stearns machines had not purchased the Stearns machines, they would have purchased an Underwood. But the court cannot assume any such thing. If the Stearns Company had been the only competitor the plaintiff had, there might be more reason for the argument. But in view of the fact that during the period of these sales there were at least eight other manufacturers having machines on the market and with a production in excess of the Stearns Company, it will be seen how impossible it is for a court to indulge in any such illogical conclusion.

[3, 4] It was urged in the argument in this court that the defendants are jointly and severally liable, inasmuch as the Stearns Company manufactured the machines and the Typewriter Inspection Company sold them. The objection thus raised in this court was not suggested to the master, and is not included among the exceptions taken to his report, although it is stated in the assignment of errors filed to the court's decree that error was committed by the court in failing to find that the defendants were jointly infringers and are jointly liable. Counsel must be aware that the proper practice requires that no exceptions to a master's report can be raised in this court which were not taken before the master. The rule is an old and well-established one. In Story v. Livingston, 13 Pet. 359, 366, 10 L. Ed. 200, the Supreme Court in 1839 declared that in chancery practice no exceptions to a master's report could be made which were not taken before the master, and that the object of the rule was to save time, and to give him an opportunity to correct his errors or reconsider his opinion. Such had long been the English rule, and the federal courts have always adhered to it. See McMicken v. Perin, 18 How. 507, 15 L. Ed. 504 (1855); Topliff v. Topliff, 145 U. S. 156, 173, 12 Sup. Ct. 825, 36 L. Ed. 658 (1892).

But we may perhaps waive the technicality in this case for the purpose of saying that the objection, if properly raised, would be without merit. This action is distinguishable from Jennings v. Dolan (C. C.) 29 Fed. 861 (1887). In that case, one defendant manufactured the infringing article, and the other defendant, acting as the other's agent, sold it, and the court held them jointly liable. In the case at bar no agency existed between these defendants, and Stearns Company had no interest in any sales made by the Typewriter Inspection Company. The latter bought the machines on its own account, and sold them at its own prices, and strictly on its own account.

The decree is affirmed in all respects, except that the court below is directed to modify the amount of the judgment to be entered against the Typewriter Inspection Company, so that it shall be for the sum of $1,428, instead of $1,328.

SMART v. WRIGHT.

(Circuit Court of Appeals, Eighth Circuit. September 7, 1915.)

No. 4455.

1. APPEAL AND ERROR ⟹854—SCOPE OF REVIEW—GROUNDS OF DECISION.
Error is not assignable to the reasons for a decree given in the court's opinion.
[Ed. Note.—For other cases, see Appeal and Error, Cent. Dig. §§ 3403, 3404, 3408–3424, 3427–3430; Dec. Dig. ⟹854.]

2. PATENTS ⟹112—SUIT FOR INFRINGEMENT—DEFENSES—EFFECT OF INTERFERENCE PROCEEDINGS.
The failure of a party to an interference proceeding in the Patent Office to make any showing or take any testimony does not estop him to claim that he was the original inventor in subsequent litigation for infringement.
[Ed. Note.—For other cases, see Patents, Cent. Dig. §§ 162–165; Dec. Dig. ⟹112.]

3. PATENTS ⟹92—PERSON ENTITLED TO PATENT—JOINT INVENTION.
Where a machine was the joint product of two men, who built it together, neither can secure a valid patent therefor as the sole inventor.
[Ed. Note.—For other cases, see Patents, Cent. Dig. § 124; Dec. Dig. ⟹92.]

4. PATENTS ⟹328—ANTICIPATION—TIE PLUG MACHINE.
The Smart reissue patent No. 13,579 (original No. 956,207), for a machine for making tie plugs, *held* void for anticipation.

Appeal from the District Court of the United States for the District of Minnesota; Page Morris, Judge.

Suit in equity by Harry G. Smart against Frank M. Wright. Decree for defendant, and complainant appeals. Affirmed.

Amasa C. Paul, of Minneapolis, Minn., for appellant.

Arthur P. Lothrop, of St. Paul, Minn., for appellee.

Before HOOK, Circuit Judge, and ELLIOTT and YOUMANS, District Judges.

YOUMANS, District Judge. Appellant brought suit in the court below against appellee for the alleged infringement of reissued letters patent, of date June 17, 1913, No. 13,579, as a reissue of letters patent No. 956,207, dated April 26, 1910. The subject of the original and reissued letters patent was alleged to be a new and useful improvement in tie plug machines.

The answer sets up six defenses: (1) That the appellee, and not the appellant, was the original inventor of the tie plug machine forming the subject-matter of the patent alleged to be infringed. (2) That appellee manufactured and used the tie plug machine with the full knowledge, consent, and license of the appellant. (3) That the reissued letters patent covered a different invention from the original patent, and are therefore invalid and void. (4) That the appellee had acquired intervening rights between the issue of the original patent and the grant of the reissue, which entitled him to have the use of the ma-

chine. (5) Noninfringement. (6) That the patent in suit was void in view of the prior art.

In an opinion filed in the case, the trial court held against each of these defenses except the sixth. The decree, however, was in the following terms:

"This case came on to be heard at this term and was argued by counsel orally and by briefs; and now, upon due consideration thereof, it is ordered, adjudged, and decreed as follows, viz.: That the bill be dismissed, and that defendant recover from the plaintiff his costs and disbursements, to be taxed."

The decree does not state upon what defense or defenses the bill was dismissed. There are eight assignments of error, as follows:

"(1) The District Court erred in holding that claim 1 of the Smart patent in suit No. 956,207, is void. (2) The District Court erred in holding that claim 2 of the Smart patent in suit No. 956,207, is void. (3) The District Court erred in holding that claim 3 of the Smart patent in suit No. 956,207, is void. (4) The District Court erred in holding that claim 4 of the Smart patent in suit No. 956,207, is void. (5) The District Court erred in holding that claim 5 of the Smart patent in suit No. 956,207, is void. (6) The District Court erred in holding that all of the elements of the claims in suit, or their mechanical equivalents, are found in the Garland & Cronkhite machine, patent No. 778,962, where they do substantially the same work by substantially the same means. (7) The District Court erred in holding that every element of the Garland & Cronkhite machine, patent No. 778,962, is adapted to perform the same general function as the corresponding element in the Smart machine of the patent in suit, and that all of the elements in both structures have the same organized relations, perform the same functions, and are capable of producing the same results. (8) The District Court erred in dismissing the bill of complaint."

[1] It will be noted that all of the assignments of error, except the eighth, are directed to something other than the decree. They are, in fact, directed to the reasons given in the opinion for the decree. Error is not assignable to reasons given for rulings or orders. Caverly v. Deere, 66 Fed. 305, 13 C. C. A. 452; Russell v. Kern, 69 Fed. 94, 16 C. C. A. 154; McFarlane v. Galling, 76 Fed. 23, 22 C. C. A. 23; Crawford v. Fayetteville Lumber & Cement Co., 212 Fed. 109, 128 C. C. A. 623. Therefore the only assignment of error available to the appellant on review is the eighth, which assigns error for the dismissal of the bill. Under that assignment the consideration of all the testimony taken in the case is involved.

I. For some years prior to May, 1907, appellant and appellee were partners, conducting a woodworking establishment or sash and door factory at St. Cloud, Minn., under the firm name of Wright & Smart. With a view of securing from the Great Northern Railway Company a contract for the making of tie plugs, it was suggested that the firm build a tie plug machine. The testimony is conflicting as to the source of the suggestion, whether from appellant or appellee. The construction of such a machine was begun in the shop of the firm in the month of January, 1907. Four witnesses testify as to the construction of this machine—the parties to this suit, and two men who were working in the shop at the time, McCarthy and Skanter. Wright testified that he made a sketch in accordance with which the machine was constructed, and he is corroborated by the witness McCarthy. Smart testified that the machine was constructed under his direction by the witness Skan-

ter, and the latter corroborates Smart. The machine was completed in the month of April, 1907, and was used at once by the firm in filling contracts for tie plugs. The firm was dissolved in May following, and the interest of Smart in the firm business and property was bought by Wright. The tie plug machine was regarded as belonging to the firm. With reference to the selling of his interest in the business and the disposition of the tie plug machine, Smart testified as follows:

"He [Wright] had made a proposition for my interest in the business close to 6 o'clock in the evening. In the afternoon I told him I would like to have till 7 o'clock to consider the matter; wanted to talk it over with my wife. When I got back at that time, I says to Wright, or asked Wright, rather, if he intended to continue in the plug business. He says, 'No, I have lost enough money and am not going to lose any more.' I said, 'Mr. Wright, if you will let me have the plug machine, we will call it a trade.' He says, 'No, I wouldn't do anything of the kind;' he says, 'You claim an interest in the glue press back there. You may have my interest in the plug machine for the glue press. If you will allow me to keep the plug machine until I have finished up the back orders, it is a trade;' and I says, 'All right.'"

With reference to that point Wright testified as follows:

"Q. Did you have any conversation with Mr. Smart about the tie plug machine at that time? A. Yes; I told him we had lost money so far with that plug machine, and that I believed I could build a machine that would cut more plugs. Q. Did you have any conversation before the papers were signed about the machine? A. That was not at the time the papers were signed; that was before that. We lost money with the sort of plugs cut at that time with the old machine—that old single machine. Q. Did you have any conversation with Mr. Smart, after the papers were signed, about the machine that was built, after the papers were signed and the transfer made? A. Not any more than when we made the trade. Q. The trade was made before? A. Traded after. He had an interest in a glue press. The patterns were made in the shop by our men but I think the company who did the work on this glue press was the Granite City Iron Works, so he claimed he owned the glue press. This took place in the Headquarters Saloon at St. Cloud. He wanted to know if I would trade him the old plug machine for his interest in the glue press, and says, 'You are going to make a new one, and will not need that.' Mr. Smart asked if it would be in the road, and I said it would be all right. This machine could stay in the building until I had my other machine made, and then it was to be delivered to him, whenever he called for it."

[2] The plug machine remained in Wright's possession until he had completed another, which constituted the alleged infringement. There is nothing in the testimony to indicate that up to the time of the dissolution of the firm the intention existed on the part of either appellant or appellee to apply for a patent. After the dissolution, and after the appellee had constructed the second machine, the idea occurred to each one of the parties to forestall the other in securing a patent. Upon suggestion in the Patent Office of an interference as between the claims of appellant and appellee, and proceedings thereunder, the following order was entered:

"Whereas, Wright, the junior party, having failed to make any showing why judgment on the record should not be rendered against him in view of the fact that he failed to take any testimony; and

"Whereas, the date allowed for such action has expired in pursuance of the notice dated March 31, 1913, priority of invention of the subject-matter in issue is hereby rendered in favor of Harry G. Smart, the senior party."

That adjudication does not estop the appellee from making the defenses set up in his answer. Reckendorfer v. Faber, 92 U. S. 347, 23 L. Ed. 719; Christie v. Seybold, 55 Fed. 69, 5 C. C. A. 33.

[3] Prior to the dissolution of the firm, neither member made any claim to invention. All the facts in testimony concerning the construction and use of the machine lead to the conclusion beyond reasonable doubt that the machine was the result of the joint thought and action of the two men, Wright and Smart. That being the case, neither of them could secure a valid patent as sole inventor. American Patent Diamond Dop Co. v. Wood et al. (C. C.) 189 Fed. 391; Worden v. Fisher (C. C.) 11 Fed. 508; Thomas v. Weeks, Fed. Cas. No. 13914; Arnold v. Bishop, Fed. Cas. Nos. 552 and 553.

[4] II. The defense of anticipation was fully made out by the testimony. The machine was intended to make plugs from small strips or pieces of wood, and these plugs were about 4 to 4½ inches in length. The machine is provided with a suitable table whereon strips from which the plugs are to be formed are placed. An endless chain carrier travels over the table, and is provided with lugs which project above the surface of the table engaging the strips and carrying them over the table and through the machine. At the back of the table is a suitable guide plate against which the ends of the plugs are placed, and as the plugs are carried forward they are brought into engagement with a suitable saw, by which they are cut off to the proper length. As the plugs are carried across the top of the table, after leaving the saw, their ends are engaged by cutter heads that are arranged one above and the other below the table. The upper cutter head bevels off the upper surface of the end of the plug, and the lower cutter head bevels off the lower surface of the same plug. In order to hold the plugs while they are being operated on as above stated, there were provided a presser bar and two spring bars. The presser bar had one end secured to a pin fastened in the guide plate. The spring bars were designed merely to assist the presser bar in holding the plug blanks in place. The contention of the appellant is that the presser bar and its method of attachment were the improvements which distinguished his machine from other machines and constituted the element of patentability. It was shown in testimony that the entire combination composing appellant's alleged invention was included in a prior patent to Garland & Cronkhite. In the latter patent there were presser bars which were functionally the same as the presser bars of the Smart reissued patent.

"Except where form is of the essence of the invention, it has but little weight in the decision of such an issue; the correct rule being that, in determining the question of infringement, the court or jury, as the case may be, are not to judge about similarities or differences by the names of things, but are to look at the machines or their several devices or elements in the light of what they do, or what office or function they perform, and how they perform it, and to find that one thing is substantially the same as another, if it performs substantially the same function, in substantially the same way, to obtain the same result, always bearing in mind that devices in a patented machine are different in the sense of the patent law when they perform different functions or in a different way, or produce a substantially different result. Nor is it safe to give much heed to the fact that the corresponding

device in two machines organized to accomplish the same result is different in shape or form the one from the other, as it is necessary in every such investigation to look at the mode of operation or the way the device works, and at the result, as well as at the means by which the result is attained. Inquiries of this kind are often attended with difficulty; but if special attention is given to such portions of a given device as really do the work, so as not to give undue importance to other parts of the same which are only used as a convenient mode of constructing the entire device, the difficulty attending the investigation will be greatly diminished, if not entirely overcome. Cahoon v. Ring, 1 Cliff. 620." Machine Co. v. Murphy, 97 U. S. 120, 24 L. Ed. 935.

The only difference between the devices for holding in position the material operated on in the Garland & Cronkhite machine and the devices performing the same office in the Smart machine was with reference to the method of attachment. As shown by the testimony, that method was included in the Brown patent, which was prior to the Smart patent. The Smart patent was not a new combination composed of old elements. It was an old combination, all the parts of which were well known to the prior art. It was therefore not patentable.

The decision of the lower court was correct, and it is affirmed.

HOOK, Circuit Judge, concurs in the result.

NOTE.—The following is the memorandum opinion of Morris, District Judge, in the court below:

I do not think that the defense of intervening rights can be sustained. As to that defense I think counsel for plaintiff correctly states in his brief the rule and its application in this case.

Nor do I think that it can be found under the evidence, especially in view of the interference proceedings in the Patent Office and the strict rule of proof resulting therefrom, that the defendant, Wright, was the first and true inventor of the machine covered by the reissue patent, and that defense cannot, therefore, be sustained.

The evidence, to my mind, shows clearly that the Wright machine was constructed with the knowledge of Smart prior to his application for patent, but fails to satisfy me that it was with his consent. Therefore that defense must fail.

Nor do I think that the defense that the claims, or any of them, are invalid because they are a departure from the disclosure of the original or the reissue application and patent can be sustained. It is conceded by both sides that the plaintiff's machine for which the reissue patent was issued and the defendant's machine show the same combination of elements and are practically the same, except as to the double construction of defendant's machine, and the manner in which the presser bar is mounted on the pin. Without following counsel in the many refinements of their discussion of the mounting on its pin of the presser bar, it seems to me entirely clear that, if the claims of the patent involved here are valid, they are infringed by the defendant's machine. In other words, I do not think the fact that the defendant's presser bar is loosely mounted on or secured to the pin will save an infringement of any of the claims, whether those claims be construed as meaning that the presser bar has a flexible end rigidly secured to the pin, (as I think they must be in claims 1, 2 and 3), or not. The defense, therefore, of noninfringement, must fail, if the claims in suit are valid.

The sole question then remaining is as to the validity of the claims in suit. If they are invalid, it must be so by reason of anticipation and lack of invention over the prior art. It seems to me that the general combination of elements shown in the reissue patent here in suit and in the claims thereof under consideration is presented in its entirety by the Garland & Cronkhite structure, and if there is any novelty in these claims it must be found in

the specific presser bar mechanism described therein. And this, as I understand it, is the ground on which the plaintiff's counsel contends that they must be sustained.

I do not think this case falls within that class of cases, cited by counsel for plaintiff, in which it is stated that "it constitutes no anticipation and no defense to a claim of infringement that one or more elements of a patented combination, or one or more parts of a patented improvement, may be found in one old patent or publication, and others in another, and still others in a third." On the contrary, it seems to me that counsel for defendant in his reply brief has pointed out the true principle applicable to this case, and that it comes within the last sentence of the clause quoted from above in the opinion of Judge Sanborn in Ottumwa Box Car Loader Co. v. Christy Box Car Loader Co., 215 Fed. 362, in which he says: "It is indispensable that all of them, or their mechanical equivalents, may be found in the same description or machine, where they do substantially the same work by the same means."

Where the combination of elements in a set of claims is disclosed in a prior patent, and the claims depend for patentability upon specific features of a single element of that combination, then, if these specific features are shown in another existing patent, or in other existing patents, of a machine or machines used for analogous purposes, so that they would readily, without the exercise of the inventive faculty, suggest themselves to a skilled mechanic, such claims are void. A combination of elements, to be patentable, where the elements are separately old, must be, not a combination shown in a prior patent, but a new combination, in which these several old elements are reorganized. This is not true here. The combination shown in the reissue patent is not a new method of combining old elements. The combination and the method of combining the old elements are the same as in the Garland & Cronkhite machine, and the feature of novelty does not reside in a new combination of old elements, but in the specific modification or improvement of one of the elements of that combination, namely, the presser bar, and, if the specific features of this element as well as the combination are old, then the claims must be held to be void. Nor does it produce a new and useful result different from that produced by the Garland & Cronkhite machine.

All of the elements of the claims in suit, or their mechanical equivalents, are found in the Garland & Cronkhite machine, where they do substantially the same work by substantially the same means. Every element in this machine is adapted to perform the same general function as the corresponding element in the Smart machine, and all of the elements in both structures have the same organized relations, perform the same functions, and are capable of producing the same result. It seems to me that a skilled mechanic, having before him a machine of the Garland & Cronkhite patent, and knowing of the various forms of presser bar mechanism employed in machines in the woodworking art, as shown by prior patents for machines in that art (see exhibits offered by defendant, especially the patent to Brown, No. 97476, and the patent to Wilson, No. 664,306), would readily, without the exercise of the inventive faculty, substitute for the specific form of presser bar, or presser fingers, shown in the Garland & Cronkhite machine, the form of presser bar shown in the Smart machine.

I do not think it matters that the presser bars, or elastic pressers, in the Brown patent, and in the Wilson patent, do not extend across the table and beyond the cutters. I think any mechanic could see at a glance that similar presser bars, made narrower than those in the Brown patent, if necessary, could be made to extend beyond the cutters as far as might be necessary. Nor do I think it matters that in the Brown patent only the point of the presser bar engages the top of the shingle or piece of material operated upon. I think any mechanic could see at a glance that a similar presser bar might be so made and extended as to engage along all or a part of its length the piece of material operated upon, and while it was being operated upon by many separate tools.

I do not agree with counsel for plaintiff that the Garland & Cronkhite machine is not adapted to and cannot make tie plugs out of the small plug blanks which are used with the Smart machine. It seems to me that it is so

adapted and can do so, and that the additional machinery for sawing the boards, after they have been beveled, into tie plugs, could be dispensed with, if small plug blanks were used. I think it has the means of holding the small independent plug blanks in position, certainly if the fingers *1b* were extended; and such extension, it seems to me, would suggest itself to any mechanic at a glance.

It seems to me, therefore, that the claims here in suit must be held to be void, and that the bill should be dismissed.

HOADLEY BRAKE SHOE CO. v. AMERICAN BRAKE SHOE & FOUNDRY CO.

(Circuit Court of Appeals, First Circuit. October 7, 1915.)

No. 1124.

PATENTS ⟹328—VALIDITY AND INFRINGEMENT—RAILWAY BRAKE SHOE.

The Chipley patent, No. 651,435, for a railway brake shoe, was not anticipated and discloses patentable invention, which was made by the patentee and is of a fairly broad character. Claims 4, 5, and 6 are not limited to a shoe made in two parts, but apply as well to a continuous shoe. As so construed, *held* infringed.

Appeal from the District Court of the United States for the District of Massachusetts; Clarence L. Hale, Judge.

Suit in equity by the American Brake Shoe & Foundry Company against the Hoadley Brake Shoe Company for infringement of letters patent No. 651,435, for a railway brake shoe, issued June 12, 1900, on application of Gardner W. Chipley. Decree for complainant, and defendant appeals. Affirmed.

For opinion below, see 222 Fed. 327.

Arthur v. Briesen, of New York City (Fred A. Klein, of New York City, on the brief), for appellant.

Frederick P. Fish, of Boston, Mass. (George Cook, of New York City, and J. Lewis Stackpole, of Boston, Mass., on the brief), for appellee.

Before PUTNAM, DODGE, and BINGHAM, Circuit Judges.

BINGHAM, Circuit Judge. The plaintiff, the American Brake Shoe & Foundry Company, is the owner of United States patent No. 651,435, issued June 12, 1900, on the application of Gardner W. Chipley, filed January 18, 1900, Chipley having assigned one half thereof to Charles W. Armbrust, and complains that the defendant, the Hoadley Brake Shoe Company, has infringed claims 4, 5, and 6 of the patent, in its manufacture and sale of brake shoes.

The patent is for a new and useful improvement in railway brake shoes. Claims 4, 5, and 6 read as follows:

"4. A brake shoe provided in its wearing face with recesses adapted to receive the attaching and guide lugs upon the back of another shoe, substantially as described.

⟹For other cases see same topic & KEY-NUMBER in all Key-Numbered Digests & Indexes

"5. A brake shoe provided in its wearing face with recesses adapted to receive the guide and attaching lugs on the back of another shoe, and with means for securing the two shoes together, substantially as described.

"6. A brake shoe having its wearing face and its back formed in parallel planes, so that the back of one shoe will fit the face of another shoe, and provided in its wearing face with recesses adapted to receive the attaching and guide lugs upon the back of another shoe, substantially as described."

The invention comprises two features. The first relates to the provision of a divided or two-part brake shoe, with which we are not particularly concerned. The second feature "relates to the provision of a brake shoe adapted to receive, and have attached to it the back or rear portion of a partially worn shoe, whereby partially worn shoes may be used completely up by attaching them to and using them with new shoes."

It appears that prior to Chipley's invention brake shoes, such as were then in vogue, on being worn down to a point where they could not be used further, without injury to the brake head, had to be discarded and go to scrap. To avoid this he conceived the idea of attaching a partially worn brake shoe to the face of a new shoe, so that the old shoe would be completely worn out. In assembling the shoes, the inner or new shoe is attached to the brake head, and the outer or old shoe is attached to the face of the inner one. Attaching and guide lugs are provided on the back of the shoes for securing the inner shoe to the brake head, and on the face of the shoes are recesses into which the attaching and guide lugs on the back of a similar shoe fit and secure it to the face of the inner shoe.

In operation, the outer shoe wears away entirely, and, after the inner shoe is partially worn, it is removed from the brake head, a new shoe is attached to the brake head, the worn shoe is attached to the face of the new shoe and the operation is continued.

In the District Court it was held that Chipley's alleged invention was not anticipated by prior patents or prior uses, and was new; that it had been actually reduced to practice, and was useful; and that Chipley, and not Armbrust, was the original and sole inventor. We have carefully examined the record and arguments of counsel with reference to these questions, and are satisfied that the conclusions reached by the District Court as to them are right.

It was further held in the District Court that the claims in issue were valid and were infringed by the defendant. It is upon these questions that the defendant makes its chief contention. It says (1) that the means set forth in the specification for interlocking the back of a brake shoe to the face of another shoe are only capable of use when applied to a divided brake shoe, and consequently the claims should be construed as limited to such a shoe, and, when thus limited, the defendant does not infringe, as its shoe is a continuous shoe; and (2) if the claims are not thus limited, they are invalid, because Chipley does not show or describe the particular means necessary to unite continuous shoes, which these claims purport to cover.

It must be conceded that the particular means described in the specification of the patent for interlocking the back of a worn shoe to the face of a new one are specially adapted for interlocking divided shoes,

the parts being locked together by an end to end movement, and that they are not applicable for interlocking continuous shoes without modification—the reason being that there are no side entrances to the recesses on the face of the shoe or to the key ways or recesses in the attaching and guide lugs, so that the attaching and guide lugs may be moved transversely into the recesses on the face of the shoe and become locked by the lugs situated in those recesses. The required modification, however, is slight, would suggest itself to any one skilled in the art, and is but a phase of the groove and rib idea which was old at the time the application for the patent was filed. Then, again, means for interlocking a continuous brake shoe to the brake head by grooves and ribs were well known in the art at the time the patent was applied for, and could be employed, and would be practical, for interlocking shoes of the continuous type. Such means are, therefore, within the range of reasonable equivalents.

Is the patentee entitled to the use of equivalents? In his specification he declares:

"It will be * * * understood that the second feature of my invention may be utilized in solid or continuous shoes, it being simply necessary for such purpose to provide suitable means for securing the old and new shoes together when assembled;" and, "while I have illustrated and described in detail a simple and efficient method of attaching the worn shoes to the new ones by interlocking them together, my invention is not restricted in its broader scope to this particular method and means of attaching the old shoe to the new one, since, so far as I am aware, it has not heretofore been proposed to use up worn brake shoes by attaching them to new shoes in any manner whatsoever, and my invention, therefore, contemplates the employment of any suitable means for securing the old shoes to the new ones in the practical utilization of this idea."

It thus appears from the specification and the claims that the second feature of the invention, to wit, the building of brake shoes, to be used until worn out by making them interchangeably attachable to the brake head and to each other by means of suitable lugs on their backs, and corresponding recesses in their faces, was not limited by the patentee to the divided shoe. It also appears that the invention is of a fairly broad character, as nothing of the kind is shown in the prior art. Under these circumstances, we are of the opinion that the patentee is justly entitled to the use of equivalent means for interlocking continuous shoes, including the groove and rib method, and that the claims in issue are valid as applied to such a shoe. We are also of the opinion that the claims are infringed by the defendant's structure, which is nothing more than the groove and rib method of interlocking a worn shoe of the continuous type to a new shoe, with some possible improvements in the method of constructing the grooves and ribs. The only perceptible advance in the defendant's attaching device over the prior art is in the inclination of the defendant's lugs and recesses, and the validity of its patent must depend upon the special form of the attaching and guide lugs and the corresponding recesses. The mode of operation of the shoe is the same as that of the one in suit, the outer or old shoe is completely worn away, and the inner or new shoe fastened to the brake head is partly worn and then removed and placed on the face of a new shoe, which in turn is attached to the brake head. The mere fact that

the defendant's brake shoe is a patentable improvement over the one in issue does not give it the right to use the fundamental idea embodied in the Chipley patent.

The decree of the District Court is affirmed, with costs in this court.

PUTNAM, Circuit Judge, concurs in the result.

GILLILAND v. ADAMSON.*

(Circuit Court of Appeals, Eighth Circuit. October 11, 1915.)

No. 4337.

PATENTS ⚷297, 328—INFRINGEMENT—INJUNCTION—DECISION IN OTHER DISTRICT.

The parties are entitled to a judgment based on the facts as developed in the case; and those facts, as established by undisputed testimony, containing no inherent improbabilities, demonstrating beyond a reasonable doubt that defendant made, used, and sold vulcanizers, embodying all the features contained in complainant's patent, No. 1,057,911, not only before the patent was issued, but even before the idea became definitely formed in complainant's mind, he should not be enjoined as an infringer, notwithstanding the decree for complainant of another district court, in a suit by him against another.

[Ed. Note.—For other cases, see Patents, Cent. Dig. §§ 481–488; Dec. Dig. ⚷297.

Grounds for denial of preliminary injunctions in patent infringement suits, see note to Johnson v. Foos Mfg. Co., 72 C. C. A. 123.]

Appeal from the District Court of the United States for the Eastern District of Missouri; David P. Dyer, Judge.

Suit by David C. Gilliland against Cecil F. Adamson. From a decree for complainant, defendant appeals. Reversed, with directions.

T. Percy Carr, of St. Louis, Mo. (James A. Carr and Amasa M. Holcombe, both of St. Louis, Mo., on the brief), for appellant.

Percy B. Hills, of Washington, D. C. (Douglas W. Robert, of St. Louis, Mo., on the brief), for appellee.

Before HOOK, Circuit Judge, and ELLIOTT and YOUMANS, District Judges.

YOUMANS, District Judge. This is an appeal from a decree restraining and enjoining appellant, his agents, workmen, and employés, "from further making, using, or selling, or causing to be made, used, or sold, directly or indirectly, any portable vulcanizing device for tires contained in or embodying the invention patented in letters patent No. 1,057,911 dated April 1, 1913." The only question involved is one of fact, and that is whether the vulcanizing device patented by appellee was made, used, and sold by appellant prior to appellee's alleged invention.

The decree in the case of Adamson v. Shaler, 208 Fed. 566, decided in the United States District Court for the Eastern District of

---

⚷For other cases see same topic & KEY-NUMBER in all Key-Numbered Digests & Indexes

*Rehearing denied January 8, 1916.

Wisconsin was introduced by appellee. He also introduced the testimony of appellant in that case, together with the opinion of the District Judge. The decree in that case, following the opinion, sustained the patent, and enjoined Shaler from using or selling the device which was adjudged an infringement.

The testimony of appellee shows that the idea embodied in the patent assumed shape in his mind on the 19th day of August, 1911, on which day he made a drawing of the different parts constituting the vulcanizer, the subject of his patent. The appellant introduced testimony to the effect that as early as August 7, 1911, he had caused vulcanizer castings to be made in practically the same form as those set out in appellee's application for a patent, and that prior to the 19th day of August of that year appellant had sold vulcanizers embodying all the elements of appellee's patent. That testimony is not disputed in any essential particular. It contains no inherent improbabilities.

The lower court held that it was bound by the decree of the United States District Court for the Eastern District of Wisconsin, rendered in another case. The parties were entitled to a judgment based upon the facts as they were developed in this case. Those facts demonstrated beyond a reasonable doubt that the appellant used and sold a vulcanizer embodying all the features contained in appellee's patent, not only before the patent was issued, but even before the idea became definitely formed in appellee's mind.

Therefore the decree of the lower court must be reversed, with direction to dismiss appellee's bill.

F. F. SLOCOMB & CO., Inc., v. A. C. LAYMAN MACH. CO.

(District Court, D. Delaware. January 30, 1915.)

No. 312.

1. PATENTS ⟹259—"CONTRIBUTORY INFRINGEMENT"—SALE OF REPAIRS TO OWNERS OF PATENTED MACHINES.

The furnishing of repair parts to the owner and user of a patented machine, where the repairs do not amount to a reconstruction, and in the absence of any express limitation in the contract by which the machine was sold, does not constitute a "contributory infringement" of the patent.

[Ed. Note.—For other cases, see Patents, Cent. Dig. §§ 400–402; Dec. Dig. ⟹259.

For other definitions, see Words and Phrases, First and Second Series, Contributory Infringement.]

2. PATENTS ⟹255—INFRINGEMENT—REPAIR OR RECONSTRUCTION OF MACHINE.

The purchaser of a patented machine is entitled to make necessary repairs and to replace worn-out parts, not separately patented, so long as the identity of the licensed machine is not destroyed; and what he may do himself another may do for him without being chargeable with infringement.

[Ed. Note.—For other cases, see Patents, Cent. Dig. §§ 397, 399; Dec. Dig. ⟹255.]

⟹For other cases see same topic & KEY-NUMBER in all Key-Numbered Digests & Indexes

3. PATENTS ⟹259—CONTRIBUTORY INFRINGEMENT—FURNISHING REPAIRS FOR PATENTED MACHINE.

The furnishing by defendant of repair parts to users of patented machines made and sold by complainant, of small value severally, to replace parts subject to wear, and which in numerous instances were purchased by defendant from complainant at customary prices, *held* not to constitute contributory infringement.

[Ed. Note.—For other cases, see Patents, Cent. Dig. §§ 400–402; Dec. Dig. ⟹259.]

4. PATENTS ⟹328—VALIDITY AND INFRINGEMENT—LEATHER-STAKING MACHINE.

The Craig & Slocomb reissue patent, No. 11,843, for a leather-staking machine, *held* valid, but not infringed.

5. PATENTS ⟹167—CONSTRUCTION—CLAIM FOR COMBINATION.

Where a claim of a patent is for a combination, to be valid, it must be for an operative combination, and if an element essential to make it operative is shown and described in the specification and drawings, but is omitted from the claim, it must be read into the latter.

[Ed. Note.—For other cases, see Patents, Cent. Dig. § 243; Dec. Dig. ⟹167.]

6. PATENTS ⟹246—INFRINGEMENT—COMBINATION.

Each of the parts whose co-operative action is necessary for the performance of the function of a mechanical combination claimed is an essential element of such combination, and a combination which does not contain it, or its equivalent, is not an infringement.

[Ed. Note.—For other cases, see Patents, Cent. Dig. § 387; Dec. Dig. ⟹246.]

7. PATENTS ⟹328—VALIDITY AND INFRINGEMENT—LEATHER-STAKING MACHINE.

The Slocomb patent, No. 927,609, claims 4 and 5, for a leather-staking machine having a rotatable breast roll with manually operated devices for unlocking and locking it in different positions while the machine is in motion, *held* not infringed.

In Equity. Suit by F. F. Slocomb & Co., Incorporated, against the A. C. Layman Machine Company. On final hearing. Decree for defendant.

See, also, 201 Fed. 101.

E. Hayward Fairbanks, of Philadelphia, Pa., for complainant.

Charles Howson and William Steell Jackson, both of Philadelphia, Pa., for defendant.

BRADFORD, District Judge. The bill charges infringement of reissue patent of the United States No. 11,843, granted July 31, 1900, and United States patent No. 927,609, granted July 13, 1909. Both patents were assigned to and are owned by the complainant. No. 11,843 was granted to James Craig and Frank F. Slocomb for an improvement in leather-staking machines, and No. 927,609, hereinafter referred to as the breast roll patent, was granted to Frank F. Slocomb for a leather-staking machine table. The charge of infringement with respect to the reissue patent has been restricted to claims 1, 2, 3, 4, 5, 6, 13, 19, 21 and 23, which are as follows:

"1. In a leather-staking machine, a plurality of rollers mounted on a jaw thereof, and means for enabling one of said rollers to be raised or lowered independently of the other roller.

"2. In a leather-staking machine, a plurality of rollers mounted on a jaw thereof, means for enabling one of said rollers to be raised and lowered independently of the other, and means for varying the distance between said rollers.

"3. In a leather-staking machine, an upper jaw, a lower jaw, a blade carried by said lower jaw, a roller mounted in bearings attached to said upper jaw, adjustable arms carried by said upper jaw, stems adjustably supported in said arms, means for securing said stems in their adjusted positions and a roller having bearings in said stems.

"4. In a leather-staking machine, an upper jaw, a roller mounted in suitable bearings attached to said jaw, adjustable arms carried by the latter, said arms supporting adjustable threaded stems, and a roller having bearings in said stems.

"5. In a leather-staking machine, an upper jaw, a roller journaled thereupon, arms adjustably mounted on said jaw, adjustable stems supported by said arms, and a roller journaled in said stems.

"6. In a leather-staking machine, an upper jaw having a plate attached thereto, a roller journaled in bearings depending from said plate, slotted arms having a cross-piece attached thereto, means for securing said arms to said plate, bearings capable of vertical adjustment depending from said arms, and a roller journaled in said bearings."

"13. In a leather-staking machine, an upper and lower jaw, a roller mounted in suitable bearings attached to said upper jaw, adjustable arms carried by the latter, stems adjustably supported in said arms, and a roller having bearings in said stems, in combination with a plurality of upright blades attached to said lower jaw, one of said blades occupying the space between said rollers when said jaws are in their forward position."

"19. In a leather-staking machine, upper and lower jaws pivotally supported, a blade carried by said lower jaw, a roller mounted in bearings attached to said upper jaw, arms carried by the latter, stems adjustably supported in said arms, means for locking said stems in position and a second roller having bearings in said stems."

"21. In a leather-staking machine, in combination with the jaws thereof, mechanism for reciprocating and opening and closing said jaws, and laterally-movable means for adjusting said jaws, said means being controlled and operated by the knee of the attendant."

"23. The combination with the jaws of a leather-staking machine, of mechanism for reciprocating and opening and closing said jaws, and laterally-movable means for adjusting one of said jaws, said means being located below said jaws."

With respect to the breast roll patent the charge of infringement has been restricted to claims 4 and 5, which are as follows:

"4. The combination with a staking machine, of a breast roll rotatably mounted thereon, and means to lock said roll.

"5. In combination with a staking machine, a breast roll rotatably mounted thereon, and means to lock said roll in different positions."

[1] The complainant in the bill as amended charges the defendant with direct infringement in manufacturing, using and selling leather staking machines embodying the inventions described and claimed in the two patents in suit, and also with contributory infringement in furnishing and supplying repair parts to owners and users of such leather-staking machines for the purpose and with the intent that such repair parts should be united with other elements to complete the combinations claimed in the said patents. The bill does not allege that the defendant furnished repair parts to persons other than those owning and using staking machines manufactured and sold by the complainant under the patents in question, nor that the repair parts

were separately patented. Nor is there any evidence showing or tending to show that repair parts were furnished by the defendant to persons not owning and using the machines to which they were applied. Nor has it been shown that the repair parts were furnished and supplied by the defendant with any actual intent to defraud or wrongfully injure the complainant in the enjoyment of its patent monopoly unless the furnishing of such repair parts per se gives rise to the presumption of such wrongful intent. The facts do not present a case in which an alleged contributory infringer supplies repair parts to those using the patented mechanism without authority and wrongfully. The parts so furnished by the defendant were procured by the owners of the patented mechanism in order that they might not lose the beneficial enjoyment of the machines which they had a right to operate. The owners and users of the complainant's patented machines had a right to restore them to and maintain their efficiency by making from time to time suitable repairs not amounting to reconstruction. This right in the absence of a stipulation to the contrary was vested in them and not in the complainant. Morgan Gardner E. Co. v. Buettner & Shelburne M. Co., 203 Fed. 490, 121 C. C. A. 612; Wagner Typewriter Co. v. F. S. Webster Co. (C. C.) 144 Fed. 405. If the purchaser and user of the complainant's machines cannot, in the absence of a stipulation to the contrary, remedy defects resulting from their operation by making repairs falling short of reconstruction, he is at the mercy of the patent owner who can prevent him from enjoying their use by means of making such repairs and thus compel him, if he intends to use such machines at all, to purchase new ones from the holder of the patent monopoly. This would in most cases largely destroy the beneficial use of the machine, in contemplation of the purchaser at the time of buying and serving as a consideration for the purchase. The charge of contributory infringement is based upon the furnishing by the defendant to purchasers and users of the machines of the patents in suit from time to time of various repair parts. The furnishing of these repair parts is treated by the complainant as amounting to a reconstruction of the patented combination mechanism.

[2] The defendant, however, contends that the parts so furnished by it to such purchasers and users of the complainant's machines and their application thereto did not in any sense constitute reconstruction, but simply renewal by supplying repair parts not separately patented which in the course of time from the operation of the mechanism became worn out or otherwise defective. The solution of the question whether the furnishing of particular parts of patented mechanism will amount to reconstruction and consequently an invasion of the exclusive rights of the patentee is often attended with much difficulty. Much loose language has been employed on this subject. It has been said that the furnishing of a vital feature or part of a patented mechanism, when essential to its construction and operation for the accomplishment of the ends for which it is intended, will amount, if unauthorized by the patentee, to a wrongful reconstruction. But this cannot be sound as a general rule. The wearing out or breaking of a

screw or bolt will as effectually prevent the operation of the mechanism as the destruction of a larger and more expensive feature. The wearing out or breaking down of a particular part essential to the operation of the mechanism therefore cannot be relied on as furnishing the test whether reconstruction, or merely repair or renewal, is required. It is claimed by the complainant's counsel that the repair parts furnished to the owners and users of the patented machines were "to a certain extent of a non-perishable character," and that all of them were "substantially non-perishable." If the parts of the mechanism replaced by the repair parts furnished by the defendant were "substantially non-perishable" I fail to perceive why they should have been replaced, unless the owners and users of the machines desired to throw away their money in paying the defendant for repair parts of which there was no need. It is more reasonable to conclude that repair parts were bought from the defendant because the owners and users of the machines found there was need of them for the operation or efficient operation of the patented mechanism. If there was such need it was owing to the wear or breaking of the parts to be replaced. Due consideration of the facts in any given case should be determinative of the rightfulness of supplying or applying repair parts, not separately patented, to a patented mechanical combination. If, by way of illustration, patented mechanism be composed of various parts and elements the most expensive of which have an average life of twenty years, and other parts or features of comparatively trifling cost are subjected in the operation of the mechanism to such wear as to require renewal or replacement within a period of a few months, or of a year or two, it would seem reasonable and sensible to treat such renewal or replacement as involving repairs in contradistinction to reconstruction. In Wilson v. Simpson, 9 How. 109, 13 L. Ed. 66, the court said:

"We admit, for such is the rule in Wilson v. Rousseau, 4 How. [646, 11 L. Ed. 1141], that when the material of the combination ceases to exist, in whatever way that may occur, the right to renew it depends upon the right to make the invention. If the right to make does not exist, there is no right to rebuild the combination. But it does not follow, when one of the elements of the combination has become so much worn as to be inoperative, or has been broken, that the machine no longer exists, for restoration to its original use, by the owner who has bought its use. When the wearing or injury is partial, then repair is restoration, and not reconstruction. Illustrations of this will occur to any one, from the frequent repairs of many machines for agricultural purposes. Also from the repair and replacement of broken or worn out parts of larger and more complex combinations for manufactures. In either case, repairing partial injuries, whether they occur from accident or from wear and tear, is only refitting a machine for use. And it is no more than that, though it shall be a replacement of an essential part of a combination. It is the use of the whole of that which a purchaser buys, when the patentee sells to him a machine; and when he repairs the damages which may be done to it, it is no more than the exercise of that right of care which everyone may use to give duration to that which he owns, or has a right to use as a whole. * * * The right to repair and replace in such a case is either in the patentee, or in him who has bought the machine. Has the patentee a more equitable right to force the disuse of the machine entirely, on account of the inoperativeness of a part of it, than the purchaser has to repair, who has, in the whole of it, a right of use? And what harm is done to the patentee in the use of his right of invention, when the repair and replacement of a partial injury are confined to the machine which the purchaser has bought? * * *

The proof in the case is, that one of Woodworth's machines, properly made, will last in use for several years, but that its cutting-knives will wear out and must be replaced at least every sixty or ninety days. The right to replace them was a part of the invention transferred to the assignee for the time that he bought it, without which his purchase would have been useless to him, except for sixty or ninety days after a machine had been put in use. * * * The right of the assignee to replace the cutter-knives is not because they are of perishable materials, but because the inventor of the machine has so arranged them as a part of its combination, that the machine could not be continued in use without a succession of knives at short intervals. Unless they were replaced, the invention would have been but of little use to the inventor or to others. The other constituent parts of this invention, though liable to be worn out, are not made with reference to any use of them which will require them to be replaced. These, without having a definite duration, are contemplated by the inventor to last so long as the materials of which they are formed can hold together in use in such a combination. No replacement of them at intermediate intervals is meant or is necessary. * * * But if another constituent part of the combination is meant to be only temporary in the use of the whole, and to be frequently replaced, because it will not last as long as the other parts of the combination, its inventor cannot complain, if he sells the use of his machine, that the purchaser uses it in the way the inventor meant it to be used, and in the only way in which the machine can be used."

If the purchaser and user of a patented machine has a right personally to keep it in repair manifestly he equally has a right through the instrumentality of a third person to do the same thing. If, for instance, the rubber cover of a roll through continued use needs replacement, repair or renewal by way of repair of the patented machine in which it is used, and it be permissible for the owner of the machine to make such repair or renewal, without accountability to the patent holder, it is equally permissible for a third person, whether manufacturer or mechanic, to effect such repair or renewal without such liability. Whether the defendant by way of advertisement or otherwise solicited from the purchasers and users of the complainant's machines the business of supplying repair parts, or, without solicitation, remained inactive until called on for repair parts by such purchasers and users, is wholly immaterial. In Morrin v. Robert White Engineering Works, 143 Fed. 519, 74 C. C. A. 466, the circuit court of appeals for the second circuit said:

"The theory of the rule invoked by the complainant is that a patentee of a combination cannot be deprived of his gains and profits by the conversion of an old and defunct machine under the guise of repairs. If a new machine be needed the patentee is entitled to furnish it, but, on the other hand, the purchaser of a patented machine is entitled to make necessary repairs and to replace worn out parts, not separately patented, so long as the identity of the licensed machine is not destroyed. If this be lawful for the owner, it is equally so for the mechanic who is employed to do the work; the latter cannot be held as an infringer for making repairs which the former has an undoubted right to make."

[3] The question then is whether the repair parts, the furnishing of which by the defendant is complained of, were not such as could, in the absence of a stipulation to the contrary, properly be furnished by purchasers and users of the patented machines by way of repair in contradistinction to reconstruction. On this point I have little or no doubt, in view of the character of the repair parts and of the attitude

of the parties toward them. There are in evidence receipted bills from the Baker Machine Company to the defendant or its president for repair parts for machines manufactured under the patents in suit running through a period extending from and including March 7, 1908, to and including October 30, 1911, and embracing many items, no one of them costing more than $3, excepting a connecting-rod, a cam head and a roll, costing, subject to a discount, respectively $9, $3.50 and $3.85. The complainant's president, F. F. Slocomb, in his testimony expressly recognizes that the repair parts are subject to wear, and intended to be replaced from time to time. He states that the "defendant has furnished practically all the parts of our machine which are subject to wear," and further, that "as I have testified that the parts referred to wear 'for several months or possibly a year or over on the average,' I certainly had no intention to indicate that the parts in question were not wear parts or were not intended and expected to be worn out and replaced at intervals." The witness arbitrarily fixes upon "one month as the limit in time for which a part of a machine that could be called temporary or perishable would ordinarily wear." But such a limitation is not supported by reason or authority. The bill as originally filed December 2, 1911, contained no charge of contributory infringement, nor does the evidence show that the furnishing by the defendant of repair parts to the machines of the patents in suit was protested against on the part of the complainant as constituting contributory infringement until after the lapse of more than eight months after the filing of the bill, during the taking of testimony of A. C. Layman, president of the defendant. Yet the complainant knew that the defendant had for several years prior to the filing of the bill been engaged in the business of supplying repair parts to purchasers and users of the machines of the patents in suit. In fact the complainant furnished to the defendant during a considerable period prior to the filing of the bill at customary prices and on usual terms such or similar repair parts for the purpose of being so applied to such machines. There are in evidence receipted bills from the complainant, bearing the stamped initials of its president, to the defendant or its president, for repair parts for such patented machines running through a period extending from and including January 24, 1908, to and including January 7, 1909, and embracing a number of items, none of them costing more than $3.75, with the exception of a pressure bed costing $6. The complainant knowing for a considerable period that the defendant was furnishing repair parts for machines owned and operated by purchasers from the complainant, and in fact furnishing to the defendant at normal prices such repair parts for the purpose of being so supplied to such machines, pursued a course of action negativing the existence of any idea on its part that the furnishing by the defendant of such repair parts amounted or would amount to a reconstruction of the patented combination mechanism, in contradistinction to the renewal by way of repair of the particular elements or features represented by such repair parts. For it is unreasonable to assume, in the absence of an agreement to that end between the complainant and the defendant, that the former intended by its action to abandon or forego its patent monopoly to the extent of reconstruction. It is to be gathered

from the evidence that the cause of the friction and controversy between the complainant and the defendant was not the mere furnishing of repair parts by the latter which the former had countenanced and facilitated, but the fact that the defendant was placing or about to place on the market a piece of mechanism intended to compete with the staking machine of the patents in suit. The charge of contributory infringement with respect to the furnishing of repair parts savors too strongly of an afterthought, and I am unable to sustain the bill on that ground.

[4] Claims 1 to 6 of the reissue patent relate more especially to improvements in the staking devices on the forward portion of the upper jaw of the combination mechanism; claims 13 and 19 to the lower jaw and staking devices on the upper jaw; and claims 21 and 23 to means to be operated laterally by the operator for adjusting the pressure of one of the above mentioned jaws while the machine is in operation, and without stopping the same. I think the reissue patent is valid, though not for a pioneer or broad invention. The real question touching the patent is whether on a proper construction of the claims the defendant has infringed. It is more convenient to consider the charge of infringement first with respect to claims 21 and 23. The distinctive and dominating element in each of those claims is the "laterally-movable means" for regulating the pressure of the staking devices upon the skins, through an adjustment of the jaws with respect to each other. To ascertain the character of the laterally-movable means recourse must be had to the description. There, among other things, it is said:

"Our invention consists of an improved construction of leather-staking machine whereby we are enabled to effect an exact and delicate adjustment of pressure on the leather which is being staked while the machine is in motion. * * * It also consists of novel means for effecting the adjustment of the staking-jaws while the machine is in motion, at the same time enabling the operator to stand on both feet, as well as to effect the adjustment with accuracy and precision not heretofore attainable, and in addition permitting him to release the adjusting device instantly instead of being compelled to hold it in position. * * * The upward and downward movement of the jaw *7x* can be adjusted with great exactness during the operation of the machine without stopping the latter by the operator oscillating in a lateral direction to the desired extent the knee-piece *66x*. (Seen in Figs. 1 and 8.) The desired lateral oscillation is imparted by the knee of the operator, whereby the contact of the inclined or cam surfaces will cause the table or bed *42* to be raised or lowered. * * * The foot-treadles heretofore in use for adjusting the pull or pressure on machines of this class while in motion have been fundamentally imperfect and objectionable in that they necessitated the attendants maintaining a continual pressure. In practice the effect of this has usually been so fatiguing that the operator is found to depress the treadle constantly to the floor or other stop in order to support his weight on both feet. Obviously the result of this has been to make the treadle, instead of a means of regulating the pressure, merely a device for applying it. With our swiveling or laterally-movable device the pressure is not only applied, but regulated with great accuracy and precision, and the operator can change the pressure with each skin, as he should do, instantly, and without the slightest fatigue or interruption to his work, and the frictional adjusting device holds the swivel just where it is placed, being capable of adjustment, so that the swivel shall not change position on account of any vibration of the machine, nor, on the other hand, move so stiffly as to require any exertion of force. It will further be apparent that were the treadle motion not fatiguing

it would still be objectionable on the ground that it does not admit of accuracy, because it is evidently impossible for the attendant to control the motion of one foot with anything approaching precision even for a short time while compelled to balance his weight on the other foot."

I am clearly of opinion that even without reference to the proceedings in the patent office the mechanism of the defendant complained of does not infringe either claim 21 or claim 23 of the reissue patent. The former claim expressly contemplates and requires that the "laterally-movable means" constituting an element of the combination should be "controlled and operated by the knee of the attendant," and the latter claim by necessary implication, though not expressly, requires the same thing. The patent description not only expressly requires it but gives the reasons necessitating such requirement. The element has for its purpose "effecting the adjustment of the staking-jaws while the machine is in motion, at the same time enabling the operator to stand on both feet, as well as to effect the adjustment with accuracy and precision not heretofore attainable." It appears from the evidence beyond successful contradiction that it would be wholly impracticable to adjust the staking jaws or either of them while the machine is in motion by the use of the hand or foot of the operator. The withdrawal of a hand from the guiding and manipulation of the skin would prove disadvantageous or disastrous. Slocomb says:

"The operator cannot use his hand for adjusting the mechanism without stopping working on the skin while he is doing so. This is not the case if he uses his knee. * * * Where hand adjustment has been used instead of the knee, instructions have at once been given to use the knee exclusively."

So, if the operator were to use a foot for the operation of the "laterally-movable means," he would be rendered too unsteady to make proper use of the breast roll and to efficiently handle the skins between the staking jaws. The defendant's machine does not contain the laterally-movable means of claims 21 and 23 of the reissue patent, in that it discloses no "knee-piece" or anything equivalent to it. On the contrary, the mechanism for the adjustment of the staking jaws of the defendant's machine displays the very feature studiously sought to be avoided by the reissue patent. Slocomb has given some vague, loose and unsatisfactory testimony touching the feasibility or possibility of using the knee or the hand in the rotation of the adjustment wheel of the defendant's machine. He states:

"I have never attempted to operate any of the defendant's machines. In fact, I do not claim to be an expert at operating any staking machine. Moreover, my testimony with regard to the use of the hand or knee relates only to our own machines as I certainly would not presume to give any instructions with regard to any other make. * * * I have never seen anywhere any of the defendant's machines adjusted by the operator using his knee."

He also states that "the operator may also use his hand if he mistakenly wishes to do so in adjusting the pressure while the machine is in motion." And that he has seen an adjustment effected with the hand while the staking machine was in motion, "but it was of course impossible for the operator to continue staking a skin while moving with one hand the adjusting mechanism." He also states that "with the device shown in the defendant's drawing and used in his machine,

it is possible to swing the adjusting device with either the knee or the hand," and that he had "moved this adjusting mechanism with my knee, so that I am in a position to state that this adjustment can readily be made in that manner, should the operator wish to do so." But he admits that "at the time referred to, the machine was not in motion." Operating the defendant's adjusting wheel when the machine is at rest is one thing, and operating it when the machine is in motion under power is a very different thing. One can readily perceive that the adjustment wheel may be rotated while the machine is in motion by the hand, but not when a skin is in the process of being staked, for the witness states that it is "of course impossible for the operator to continue staking a skin while moving with one hand the adjusting mechanism." So it is quite conceivable that the adjusting wheel may be caused to rotate by the application of the knee in a constrained position, but that the knee in contradistinction to the foot may be used to advantage is obviously impossible from the form and construction of the mechanism. Slocomb has failed in his testimony to show that the use of the knee is a practical mode of operating defendant's adjusting mechanism. What the complainant claims to be the equivalent of the knee-piece in the machine of the reissue patent is a device called a wheel, placed under the table of the staking machine and considerably back of the breast roll, having radial spokes or rods and rotating in a vertical plane at right-angles with the staking jaws. While it is possible that the operator through bodily contortion might with the knee cause it to rotate to a certain extent, it cannot from its physical location and construction be actuated by the knee with any degree of efficiency. Certainly the attempt made in open court to operate it with the knee, when the machine was not operating upon a skin, was far from indicating that it could be so used to any advantage while the machine was in motion by one engaged in holding, guiding and manipulating the skins in process of staking. The witness Layman speaks much to the point when he says:

"There is no doubt by getting under the machine purposely for operating it with his knee that it could be done as well as with his shoulder or his head or his hands, but certainly no operator could possibly operate this wheel with his knee and at the same time hold the skin with both hands while the machine is pulling on it."

He further says:

"I have never seen nor even heard of the workman or operator using his knee in operating this wheel on our machine."

The only practical mode of using the adjustment wheel of the defendant's machine while in operation is by foot pressure of sufficient force to cause the wheel to rotate to the desired extent. This is diametrically opposed to one of the principal purposes of the reissue patentees, which was to enable the operator while the machine is in motion to "stand on both feet." As has been shown, foot pressure by the operator is expressly and pointedly condemned in the description, it being stated, among other things, that "it is evidently impossible for the attendant to control the motion of one foot with anything approaching precision even for a short time while compelled to balance his

weight on the other foot." Not only is such a device as the defendant's adjustment wheel repudiated by the reissue patentees, but that wheel is more nearly allied to the old foot treadles than to the "laterally-movable means" of adjustment in the complainant's machine. The laterally-movable means of adjustment undoubtedly was a meritorious invention possessing novelty and utility, but it has not been infringed by the defendant. The expert Livermore well says:

"When regarded as elements of the mechanism under consideration obviously defendant's vertical wheel adapted to be operated practically when the work is going on only by the foot of the operator when off the floor is not an equivalent for the horizontal segment of the Craig & Slocomb machine, an essential and specified characteristic of which is that it is laterally movable and this being for the purpose of enabling it to be practically and conveniently operated by the knee of the attendant, while standing with both feet on the floor."

[5, 6] Nor do I find that the defendant has infringed the other or any of the other claims of the reissue patent relied on by the complainant in this case. As before stated, claims 1 to 6 relate more especially to the staking devices on the forward portion of the upper jaw of the combination mechanism, and claims 13 and 19 to the lower jaw, and staking devices on the upper jaw. All the claims above specified evidently are intended to cover mechanical combinations, but are so general, indefinite or incomplete in and by themselves as not plainly to disclose the construction or operation of the mechanism to which they relate. They must, therefore, be viewed in the light of the patent description and drawings. That a mechanical device literally falls within the language of a patent claim does not necessarily show that it is covered by the claim. And where the claim is for a combination, to be valid it must be for an operative combination, and if an element essential to make it operative is shown and described in the patent description and drawings, but is omitted from the claim, it must be read into the latter. Each of the parts whose co-operative action is necessary for the performance of the function of the mechanical combination claimed is an essential element of such combination and must have been employed without authority in connection with the rest before infringement can be found. The facts here do not disclose the case of mere subcombinations, each having its proper function in assisting to bring about the contemplated general result of the operation of the patented mechanism in its entirety, and not so related to or dependent upon the other parts or subcombinations as to have its appropriate and distinctive function qualified or modified by their action. On the contrary, without going into details, the knee adjusting mechanism or "laterally-movable means" for the adjustment of the jaws and consequent regulation of the pressure on the skins is so related in its operation to that of the mechanism mentioned in the above specified claims as to qualify and control its action and constitute an essential element of the combinations. It is not enough that the defendant may through its machine reach the same result as that obtained by the complainant. To constitute direct in contradistinction to contributory infringement of any combination claim relied on in the reissue patent it is necessary that the defendant's mechanism should

contain elements the same as or equivalent to all the essential elements, whether expressed or implied in the combination claim, contained in the complainant's machine co-operating in substantially the same manner to perform its function. Neither the laterally-movable means of jaw adjustment, or knee mechanism, an essential element of the complainant's machine, nor any equivalent element, is present in the defendant's machine; and the two are accordingly so differentiated from each other, not only with respect to the knee device, taken in and by itself, but also with respect to the construction and operation of the connected intermediate mechanism between it and the outer end of the lower jaw, due to such device, as to exclude infringement. The conclusion reached renders unnecessary the consideration of various other matters presented by way of defence.

[7] The objects of the breast roll patent No. 927,609 are stated in the description as follows:

"This invention relates to a machine for staking leather and has for an object to provide an operating table which may be readily moved out of the way when it is desired to repair or inspect the operating parts of the machine. It has for a further object to provide a staking machine with a breast roller on the working table, the position of which may be shifted at will, thereby bringing a large number of working faces successively into position."

The claims here relied on by the complainant relate to the latter of the above stated objects and, as before stated, are as follows:

"4. The combination with a staking machine, of a breast roll rotatably mounted thereon, and means to lock said roll.

"5. In combination with a staking machine, a breast roll rotatably mounted thereon, and means to lock said roll in different positions."

The patentee further says in the description:

"It is well known that in this type of machine such breast rollers soon become worn, due to the constant pressure exerted against the face thereof, and therefore it becomes necessary to shift the roller to bring another portion of the periphery into operative position. The customary method of shifting this roller involves the taking apart of adjacent portions of the machine in order to accomplish the desired end, causing delay and the loss of use of the machine during such shifting of the roller. By means of my novel improvement the machine is constantly in operation and a new surface brought into use whenever desired by simply withdrawing the bolt 28 from locking engagement with the spindle 24, whereupon the latter may be rotated as desired and the worn surface shifted out of the path of the skin."

In view of the length of time the breast roll of a leather-staking machine can be used before it becomes necessary or material by reason of wear to expose a different portion of the periphery to contact with the body of the operator, the mechanism of the two claims in suit is comparatively unimportant. I do not perceive that extreme celerity in exposing different portions of the surface of the breast roll during the operation of the machine is of much moment, or that a rotary adjustment of the breast roll while the machine is not in operation would not be of substantially equal benefit. If the invention covered by the two claims in question be patentable it is a narrow one. The position of the complainant is that Slocomb was the first to introduce in a leather-staking machine a rotatable breast roll with manually operated devices for unlocking it, permitting it to be rotated, and then locked again,

while the machine is in motion. The end to be accomplished by the rotation of the breast roll in any leather-staking machine is the avoidance as far as possible of unequal wear of the roll with its attendant evils. The normal status of the breast roll is not rotation, but rest. It is intended to be shifted by way of rotation from time to time in order that different portions of the periphery may be brought into such position as to be in contact with the body of the operator during the staking of the skins. Breast rolls for leather-staking machines not only were old in the art, but they were shifted by way of rotation to answer the same ends for which the complainant's breast roll is used. This was recognized by Slocomb in describing his invention as above appears. Prior to his patent now under consideration, breast rolls were used on leather-staking machines which were provided with hexagonal ends inserted into corresponding caps and held in position therein by means of bolts and nuts. In order to change the portion of the periphery exposed to contact with the body of the operator it was necessary to loosen the hexagonal nuts from the caps, involving the use of a wrench or some equivalent tool and the expenditure of more or less time. The breast roll of the complainant is locked against rotation by means of the insertion of a bolt, actuated by a spring, in one of a series of perforations located at intervals around the periphery of the spindle of the breast roll, and is unlocked by withdrawing by hand the bolt against the tension of the spring from the perforation with which it is engaged. In the defendant's mechanism the ends of the spindles are octagonal in form and mounted in hinged caps having a smooth circular inner surface, the lower end of the cap having an extension carrying a stud on the end of which is a wing-nut which can be manipulated by the fingers of the operator. A slight loosening of the wing-nut permits the breast roll to be readily rotated without stopping the machine, and so a slight tightening of the wing-nut by hand will cause the breast roll to be held stationary. The defendant's mechanism for permitting the breast roll to be rotated and then to be held stationary in such position as may be desired was at the time of the granting of the patent to Slocomb an old and familar mechanical device known as a shaft grip, illustrated in a book in evidence, published in 1890 by Thomas Walter Barber, entitled "The Engineer's Sketch Book of Mechanical Movements, Devices, Appliances, Contrivances and Details," on page 17, figure 54. The defendant's device for controlling the rotation of the breast roll more closely resembles the mechanism of the prior art than it does that of the complainant, and whatever merit may reside in the breast roll mechanism covered by claims 4 and 5 the defendant cannot, I think, be held as an infringer with respect to those claims by reason of adopting the old device.

On the whole I have reached the conclusion that the bill must be dismissed with costs. Let a decree be prepared accordingly and submitted.

SIMPLEX CONCRETE PILING CO. et al. v. MacARTHUR CONCRETE PILE & FOUNDATION CO.

(District Court, D. Delaware. July 14, 1915.)

No. 317.

PATENTS ⟹328—VALIDITY AND INFRINGEMENT—REMOVABLE PILES FOR FORMING CONCRETE PILING.

The Shuman patents, No. 733,288, for removable piles for forming concrete piling, claims 5 and 9, and No. 739,268, for process of making concrete piles, claims 1, 3, 9, and 10, all of which relate to temporary removable piles having a driving point and an outer casing through which the pile is withdrawn and which remains either temporarily or permanently as a coffer-dam, construed, and *held* valid, and, unlike other claims, not confined to piles having the point greater in diameter than the casing so that it must be detached before the pile can be withdrawn. As so construed, said claims *held* infringed.

In Equity. Suit by the Simplex Concrete Piling Company and the Simplex Foundation Company against the MacArthur Concrete Pile & Foundation Company. On final hearing. Decree for complainants.

Charles Howson, of Philadelphia, Pa., and Hubert Howson, of New York City, for complainants.

Melville Church, of Washington, D. C., for defendant.

BRADFORD, District Judge. This suit has been brought by The Simplex Concrete Piling Company and the Simplex Foundation Company against the MacArthur Concrete Pile & Foundation Company for alleged infringement of letters patent of the United States No. 733,288, granted July 7, 1903, to Frank Shuman, for improvements in removable piles for forming concrete piling, and of letters patent No. 739,268, granted September 15, 1903, to the same patentee for improvements in processes of making concrete piles. The complainants are the present owner and the licensee respectively of the two patents in suit, and no question is raised as to their title to maintain this suit. It appears that the subject-matter of both patents was disclosed in the original application, serial No. 138,921 of January 13, 1903; but in that year during the pendency of the proceedings, in conformity to the rule of the patent office that "claims for a machine and the process in the performance of which the machine is used, must be presented in separate applications," such applications were filed on which the two patents respectively were granted. In the description of patent No. 733,288 Shuman says:

"My invention relates to that method of forming piles of concrete or cement which consists in first driving a pile into the ground, then withdrawing said pile, and then filling the opening formed thereby with concrete or cement in plastic or fluid form, which when it sets forms the permanent pile. One object of my invention is to provide for driving or withdrawing the removable pile with the exercise of much less power than is required when piles of this class as heretofore constructed are used, a further object being to render said removable pile available for under-water work or for use in unstable ground, another object being to so construct the pile that it will con-

⟹For other cases see same topic & KEY-NUMBER in all Key-Numbered Digests & Indexes

sist of but few parts, all of which can be easily made so strong as to effectually resist the shocks or strains to which they are subjected in use, and a still further object being to provide at the bottom of the opening formed by the removable pile a base for the permanent cement or concrete pile. * * * For the purpose of forming in the ground openings for the reception of concrete or cement to constitute permanent piling the use of an ordinary wooden or metal preparatory pile of cylindrical form or tapering inwardly from top to bottom is objectionable for the reason that the frictional hold of the earth upon the sides of the pile is such that the pile cannot be driven beyond a limited distance without the exercise of destructive force and cannot be withdrawn after being driven without the exercise of still greater force, the frictional hold of the earth upon the pile being now assisted by atmospheric pressure, owing to the fact that the withdrawal of the pile tends to create a partial vacuum in the opening left thereby. For this reason various forms of collapsible piles have been proposed; but such piles, owing to their sectional character are necessarily limited in strength and, moreover, do not overcome the objection of resistance due to the frictional hold of the earth thereupon while they are being driven. When the pile tapers inwardly from top to bottom, there is the same resistance to the driving of the pile, and the resistance to the withdrawal of the pile is also excessive, because, owing to the atmospheric pressure the earth is caused to firmly cling to the pile, so as to increase the difficulty of starting the same. Hence its movement is retarded for some time after it is started. In carrying out my invention, therefore, I provide the pile with an enlarged point, so as to displace the earth laterally at and near the point of the pile to a greater extent than the diameter of said pile, thereby freeing the pile, except as to a limited area at and near the point, from frictional contact with the walls of the opening formed thereby, thus facilitating the driving of the pile and practically removing any limit in the depth to which the pile can be driven. To facilitate the withdrawal of the pile, I make this enlarged point detachable therefrom. Hence the withdrawal of said pile can be effected without frictional contact of the walls of the opening to any material extent with the sides of the pile. The point, which remains at the bottom of the opening, forms an acceptable base or foundation for the permanent pile of cement or concrete. In underwater work or when working in unstable ground I provide the preparatory pile with a coffer-dam for preventing access of water or silt to the opening formed by said preparatory pile in the firm ground beneath or for preventing the caving in of the walls of the opening when the latter is being formed in unstable ground. * * * If the point is attached to the pile, the casing *11* will be sufficiently large to permit of the withdrawal of said point through the same. * * * In case the ground is in the nature of quicksand or such as to preclude the opening from retaining its shape after the pile has been pulled out the casing *11* may be of the full length of the pile and riveted or otherwise firmly fastened to the point and permitted to remain in the opening with said point when the pile is withdrawn, the casing being preferably slightly less in diameter than the greatest diameter of the point. * * * Another method of forming openings under water consists in forming a temporary water-tight joint between the hollow pile *1* and the detachable point *3* and, after the latter has been driven to the proper depth, pouring the concrete into the hollow pile and withdrawing the latter, either slowly or a little at a time, the temporary water-tight joint being broken on the withdrawal of the pile, so that the concrete can escape into the opening above the point as shown in Fig. 10, the concrete gradually displacing the water in the opening from the bottom of the same to the top. The concrete is introduced into the hollow pile at such a rate as always to maintain a head of concrete at the bottom of the same. This system of filling can also be adopted in cases where the nature of the ground is unstable, so as not to sustain the shape of the opening if the pile is wholly removed before introducing the concrete, or, as shown in Fig. 11, it can be employed in cases where the long coffer-dam casing *11* is used, the concrete being filled into the latter slowly or intermittently and the coffer-dam casing being withdrawn slowly or intermittently so as to form the pile from the bottom to the top."

The claims in this patent in suit are the fifth and the ninth, reading as follows:

"5. As a device for forming in the ground an opening for the subsequent reception of concrete or other fluid or plastic material, a removable preparatory pile having a coffer-dam detachably secured thereto in such manner that the two can be driven together and the pile can be afterwards withdrawn, leaving the coffer-dam in the opening, substantially as specified."

"9. As a device for forming in the ground an opening for the subsequent reception of concrete or other fluid or plastic material, a removable pile having an enlarged point and a casing serving as a coffer-dam, substantially as specified."

In the description of the process patent No. 739,268 nothing material to the decision of this suit is disclosed which is not in substance contained or shown in the descriptive portion of the apparatus patent No. 733,288. The claims in suit of the process patent are Nos. 1, 3, 9 and 10, reading as follows:

"1. The method of forming concrete piles, which consists in forming a preparatory pile with a coffer-dam around the same, sinking said pile and coffer-dam into position to form a hole, withdrawing the pile, and then filling the hole with concrete and permitting the latter to set, substantially as specified."

"3. The method of forming concrete piles, which consists in forming a preparatory pile with an enlarged point and a surrounding coffer-dam, sinking said pile and coffer-dam into position to form a hole, withdrawing the pile, and then filling the hole with concrete and permitting the latter to set, substantially as specified."

"9. The method of forming concrete piles, which consists in forming a preparatory pile with surrounding coffer-dam, sinking said pile and coffer-dam into position to form a hole, withdrawing the pile, then filling the hole with concrete and contemporaneously withdrawing the coffer-dam as the concrete accumulates therein, and then permitting the concrete to set, substantially as specified.

"10. The method of forming concrete piles which consists in forming a preparatory pile with an enlarged point and surrounding coffer-dam, sinking the said pile and coffer-dam into position to form a hole, withdrawing the pile, then filling the hole with concrete and contemporaneously withdrawing the coffer-dam as the concrete accumulates therein, and then permitting the concrete to set, substantially as specified."

All the claims in suit under both of the patents, whether relating to apparatus or to process, have to do with a removable preparatory pile in combination with a coffer-dam. The body of the pile is cylindrical and may be hollow or solid, and is provided with an enlarged point somewhat greater in diameter than the body of the pile. The greater diameter of the point is intended and operates to minimize the frictional contact of the pile with the walls of the opening formed by the driving of it. The point of the pile is "detachable therefrom," but remains attached or is detached according to the exigency of the circumstances. While having a greater diameter than the body of the pile, the point may under the true construction of the patents have a diameter either less or greater than the interior diameter of the coffer-dam. If it is greater than such interior diameter it is of course impossible to withdraw the pile through the coffer-dam without detaching the point. If it be less than such interior diameter, the pile may be withdrawn through the coffer-dam without detachment of the point. If the point be detached from the body of the pile to per-

mit of the withdrawal of the latter, the point remains in the ground and serves as a base for the concrete pile. If the point remains attached and the preparatory pile be withdrawn through the coffer-dam, such pointed pile may thereafter be used in forming holes for concrete piling. It is true that none of the drawings of either of the two patents disclose a point of a preparatory pile less in diameter than the interior of the coffer-dam, and hence it is argued that the patent monopoly does not extend to any apparatus or process in which the pile is withdrawn through the coffer-dam without detachment of the point. But this contention cannot be sustained. In Figs. 1, 2 and 3 of the drawings of patent No. 739,268 the diameter of the pile point is shown to be greater than the diameter of the interior of the coffer-dam, and with reference to these figures the patentee says:

"Fig. 1 represents the preparatory pile, which, as shown, is in the form of a metal tube, although it may be a solid pile of wood or metal, if desired, this pile being provided at the top with a suitable driving-head *2*, and at the bottom with a point *3*, which in the present instance is detachable from the pile," etc.

The context as well as necessary construction require that the words "is detachable" be read "is to be detached," and not "may be detached." But while the point is to be detached "in the present instance," namely, where, as shown in Figs. 1, 2 and 3, the point is too large to pass through the coffer-dam, there is no suggestion that the point must be detached where it is small enough to pass through the coffer-dam, or the coffer-dam is large enough to allow it to pass through it. The use of the words "in the present instance" negatives the idea that the point of the pile is to be detached where the pile is to be withdrawn with its point through the coffer-dam. In both of the patents the patentee has clearly shown his intention and understanding that the preparatory pile may be removed through the coffer-dam while the point remains attached to the body of the pile. In the description of patent No. 733,288 he says:

"If the point is attached to the pile, the casing *11* will be sufficiently large to permit of the withdrawal of said point through the same," etc.

And in the description of patent No. 739,268 he reiterates:

"If the point is attached to the pile, the casing *11* will be sufficiently large to permit the withdrawal of said point with the pile," etc.

There is no uncertainty in the instruction of the patents in suit on this subject. The patentee virtually says:

"Here are three figures showing a coffer-dam and a preparatory pile, with a point too large to pass through the coffer-dam. The point is therefore to be detached before withdrawing the body of the pile. But enlarge the coffer-dam shown in the figures and you may withdraw the pile with its point attached."

There was no necessity for further drawings to illustrate the plain and unmistakable teaching of the patents in this connection. Each of the several claims in suit under both patents refers to a removable pile and a coffer-dam through which the pile is to be removed or withdrawn. Every preparatory pile is provided with a point greater in

diameter than the body of the pile. In no one of the claims in suit is it stated that the point of the pile is detachable from it. In strong contrast with these claims are those referring to a pile and a coffer-dam, and severally stating that the point of the pile is detachable therefrom; the word "detachable" in such other claims evidently having the above-mentioned signification of "to be detached." Thus under patent No. 733,288, claim 7 refers to "a removable preparatory pile having a detachable point, a casing serving as a coffer-dam," etc., and claim 11 to "a removable pile having an enlarged point which is detachable from the pile, and a casing serving as a coffer-dam," etc., and under patent No. 739,268, claim 2 refers to "a preparatory pile with a detachable point and a surrounding coffer-dam," etc., claim 4 to "a preparatory pile with an enlarged and detachable point and a surrounding coffer-dam," etc., claim 11 to "a preparatory pile with detachable point and surrounding coffer-dam," etc., and claim 12 to "a preparatory pile with enlarged and detachable point and surrounding coffer-dam," etc. I perceive no escape from the conclusion that the claims in suit, unlike those last referred to contemplate and require that the removable pile with its point attached shall be withdrawn through the coffer-dam, in accordance with the statement in the descriptive portion of the two patents that if the point is attached to the pile, the casing *11* will be sufficiently large to permit of the withdrawal of said point with the pile through the casing or coffer-dam. The claims in suit cannot be limited to the modification in apparatus and process in which the point of the pile must be detached without importing into those claims the word "detachable" which the patentee studiously omitted from them, and giving them a meaning similar to that of the above mentioned claims with which they have been contrasted, in disregard of the rules applicable to the construction of patent claims. The preparatory pile mentioned in the claims in suit read in the light of the descriptive portion of the patents is a pile having a detachable point mechanically connected with it by being socketed into the end of the pile body, such point while continuing attached to the body of the pile being so rigidly connected with it as, among other things, to remain in axial alignment with it while being driven through the coffer-dam and thereafter although the pile with its point in its downward movement projects beneath the lower end of the coffer-dam, and to follow the body of the pile while being withdrawn through the coffer-dam when of sufficient diameter.

The defendant sets up by way of alleged anticipation certain prior patents and publications; but I do not find that any of the claims in suit have been anticipated. What has been termed the British Journal or Clere Method, set forth in the Journal of the Royal Institute of British Architects in 1894, substantially differs from the claims of the patent in suit both in apparatus and process. The apparatus there described discloses a pile body referred to as a "dolly." The dolly is inserted in a casing or coffer-dam, the lower end of which is detachably connected with a point having within it a hollow or depression filled or approximately filled with sand, the point with its hollow or depression being termed a "shoe." The shoe is too large in diame-

ter to be withdrawn through the coffer-dam, and must therefore remain in the ground so long as the coffer-dam is buried therein. Further, the shoe not being mechanically and rigidly connected with the lower end of the dolly, but only detachably connected with the lower end of the coffer-dam, it is evident that, if the dolly were driven through the coffer-dam to such an extent that its lower end would project a few inches below the lower end of the coffer-dam, the shoe would be wholly detached from all connection with the coffer-dam, and there being no socketing of the lower end of the dolly into the shoe, and nothing but sand between such lower end and the shoe, it would be impossible for the shoe to remain in axial alignment or any other definite alignment with the dolly, and the apparatus would be useless so far as sinking a hole beneath the lower end of the coffer-dam is concerned. The preparatory pile of the patents in suit does not here exist. Further, this apparatus is so constructed that the dolly cannot project below the coffer-dam. The head of the dolly is of a diameter sufficient to cover the coffer-dam to its outside periphery and is only separated from the coffer-dam by a rope ring or "gummet" to lessen the shock to the coffer-dam from the blows of the "monkey" upon the head of the dolly. The dolly is driven and descends with the coffer-dam, and when the coffer-dam stops, the dolly stops with it. Not to mention any other point of difference obviously the British Journal or Clere Method cannot operate as an anticipation. The British patent of 1890 granted to G. A. French also fails to disclose the subject-matter of any of the claims in suit. The pile—which is not a preparatory pile—consists of a metal cylinder in so many sections as the depth to which it is to be driven requires; the bottom of the cylinder being firmly and permanently attached to the point of the shoe. A wooden post or pole called a "dolly" and longer than the pile or portion of the pile which is to be sunk is passed down inside the cylinder or body of the pile until its end rests on the inside of the shoe. The dolly is not in any manner fastened to the body of the pile or its shoe. The upper end of the dolly projects above the cylindrical pile so that blows given by the monkey falling on the dolly operate through it directly upon the shoe, driving it into the ground followed by the pile to which it is attached. It is stated in the patent that "when driven to a sufficient depth the 'dolly' is withdrawn and the pile filled up with concrete." The patent does not disclose the preparatory pile of the patents in suit, nor any coffer-dam, and in other respects departs both in apparatus and in process from the subject-matter of those claims. It is true that in the description of patent No. 733,288 it is stated:

"In case the ground is in the nature of quick-sand or such as to preclude the opening from retaining its shape after the pile has been pulled out the casing *11* may be of the full length of the pile and riveted or otherwise firmly fastened to the point and permitted to remain in the opening with said point when the pile is withdrawn," etc.

The description of patent No. 739,268 contains a substantially similar statement. In apparatus conforming to the above statements, however, the pile is driven into the ground not through the instrumen-

tality of a pole or dolly acting directly upon the inside of the shoe or point, as in the patent to French—for there is no such pole or dolly—but through the force of the blows of the monkey upon the head of the pile. But aside from this consideration neither of the patents in suit contains any claim embodying the subject-matter of the above quoted statements, and it is unnecessary to go into any question as to their effect had they been made the foundation of any claim or claims.

Equally irrelevant is the British patent of 1864 to John Potter. No coffer-dam is disclosed. The following statement in the provisional specification sufficiently indicates the inapplicability of that patent to the subject-matter of the claims in suit:

"The tube being driven into the earth (with the point foremost) a sufficient depth, the tube is filled with the composition, the tube being then withdrawn, the loose tip is left in the earth, and the hole as the tube is withdrawn becomes filled with the composition, which being wetted hardens in the usual manner. In certain cases, however, instead of extracting the tube I leave it in the earth," etc.

The United States patent No. 589,026, granted to Alfred A. Raymond in August, 1897, has, so far as I can see, no relevancy whatever to the case under consideration.

The defendant contends that the prior art was such as to negative patentable invention on the part of Shuman, and refers to sundry prior patents and devices, among which are patents relating to the sinking of well-tubes and piles for divers other purposes. But the matters thus disclosed are not sufficient, I think, to overcome the prima facie presumption of validity of the claims in suit arising from the grant of letters patent. The various methods and apparatus are either not in the same art or differ in essential particulars from the apparatus and process of the patents in suit.

On the question of infringement there is a serious contention between counsel. There is no uncertainty as to the character of the alleged infringing apparatus and process or as to their use by the defendant. The defendant has admitted on the record for the purposes of this suit that subsequent to the issue of the letters patent Nos. 733,288 and 739,268, and since the Simplex Foundation Company became the licensee of the Simplex Concrete Piling Company, and within six years prior to the filing of the bill of complaint, it, the defendant, without the license or consent of the complainants, or either of them, used in Philadelphia and elsewhere in the United States the alleged infringing process and apparatus, such apparatus being illustrated in "Exhibit Defendant's Structure." In this structure there was a hollow steel core having a permanently attached steel point closing its lower end, a permanently attached steel head closing its upper end, and a permanently attached external steel band, an outer steel casing sixteen inches in diameter and three-eighths of an inch thick, with reinforcing outer steel bands at the top and bottom respectively on the outer steel casing. The core was smaller in diameter than the interior of the casing, but was a longer pipe than the casing, the enlarged head of the core engaging the top of the casing, and its lower

pointed end projecting below the casing, and in the head of the core there was an oak driving block to receive the driving blows. It is admitted by the defendant that the method of operation pursued in the formation of concrete piles by means of the above-mentioned apparatus and structure was as follows:

"The core was fitted into the casing and both were driven in the ground together to the desired depth for the length of the concrete pile to be formed: the core was then pulled out and wet concrete was dropped into the opening, the core was then used as a rammer, and subsequently the casing was filled to the top with wet concrete, and the casing was then removed slowly and evenly, the concrete falling into position and filling out the thin space formerly occupied by the casing."

In this apparatus used by the defendant the steel casing, indifferently called the "outer steel casing" and the "casing," is a coffer-dam. The hollow steel core with its permanently attached steel point and with its steel head is a preparatory removable pile. The permanently attached steel band around the core a short distance above its point, with the portion of the core below it, together with the steel point, forms or is the equivalent of an enlarged point, and being of slightly less diameter than the interior of the coffer-dam is withdrawn with the core or preparatory pile through the coffer-dam. The apparatus so used by the defendant was, though differing somewhat in form, essentially the same as that of the "Continental System" employed by the Cranford Paving Company, a licensee of the Simplex Concrete Piling Company in 1908 at Continental, Missouri. The apparatus so used at Continental, and the manner in which it was used constitute, I think, an embodiment of the subject-matter of the claims in suit. The defendant's apparatus includes a "removable preparatory pile having a coffer-dam detachably secured thereto in such manner that the two can be driven together and the pile can be afterward withdrawn, leaving the coffer-dam in the opening," as set forth in claim 5 of patent No. 733,288. It also includes a "removable pile having an enlarged point and a casing serving as a coffer-dam," as set forth in claim 9 of the same patent. The enlargement of the point as has already been stated is an enlargment relatively to the diameter of the body of the pile, such enlargement, however, being slightly within the limits of the diameter of the interior of the casing or coffer-dam. The method of using the apparatus complained of includes, "forming a preparatory pile with a coffer-dam around the same, sinking said pile and coffer-dam into position to form a hole, withdrawing the pile, and then filling the hole with concrete and permitting the latter to set" as set forth in claim 1 of patent No. 739,268. It also includes "forming a preparatory pile with an enlarged point and a surrounding coffer-dam, sinking said pile and coffer-dam into position to form a hole, withdrawing the pile and then filling the hole with concrete and permitting the latter to set" as set forth in claim 3 of the same patent. It also includes "forming a preparatory pile with surrounding coffer-dam, sinking said pile and coffer-dam into position to form a hole, withdrawing the pile, then filling the hole with concrete and contemporaneously withdrawing the coffer-dam as the concrete accumulates therein, and then permitting the concrete to set," as set forth in

claim 9 of the same patent. It also includes "forming a preparatory pile with an enlarged point and surrounding coffer-dam, sinking said pile and coffer-dam into position to form a hole, withdrawing the pile, then filling the hole with concrete and contemporaneously withdrawing the coffer-dam as the concrete accumulates therein, and then permitting the concrete to set," as set forth in claim 10 of the same patent. With respect to the question of infringement of claims 9 and 10 of the process patent, it is proper to observe that if the element of "contemporaneously withdrawing the coffer-dam as the concrete accumulates therein, and then permitting the concrete to set" exists as an element in the method practiced in the process conducted by the defendant, the fact that the defendant after the pulling out of the core or pile and the dropping of wet concrete into the opening, uses the core or pile as a rammer, cannot serve to avoid infringement; for the mere addition to the process of such a feature does not so change or qualify it as to make it an essentially different process. By the defendant's admission after the core or pile was used as a rammer "the casing was filled to the top with wet concrete, and the casing was then removed slowly and evenly, the concrete falling into position and filling out the thin space formerly occupied by the casing." This, I think, amounts to "contemporaneously withdrawing the coffer-dam as the concrete accumulates therein, and then permitting the concrete to set" within the fair import of the two claims last above-mentioned. Certainly the concrete in so far as necessary to fill the space theretofore occupied by the thickness of the casing accumulates in that casing contemporaneously with the withdrawing of it, and further, the casing or coffer-dam is withdrawn contemporaneously with the settling of so much of the concrete as is necessary to fill the space caused by such withdrawal. The defendant in forming the "pedestal pile" uses the process and apparatus of the claims in suit, and the fact that it makes an addition by enlarging the base of the pile by "bulging or mushrooming the concrete out into the surrounding earth" cannot shield it from the charge of infringement.

On the whole I have reached the conclusion that the claims in suit of patents Nos. 733,288 and 739,268 are valid and have been infringed by the defendant. An interlocutory decree in accordance with this opinion may be prepared and submitted.

SALT'S TEXTILE MFG. CO. v. TINGUE MFG. CO.

(District Court, D. Connecticut. August 13, 1915.)

No. 1379.

1. PATENTS ⟹49—VALIDITY—PRESUMPTION FROM INFRINGEMENT.
As against an infringer there is a presumption of utility in the patented article, and the infringement is also a strong indication of invention.

[Ed. Note.—For other cases, see Patents, Cent. Dig. §§ 59–62; Dec. Dig. ⟹49.]

⟹For other cases see same topic & KEY-NUMBER in all Key-Numbered Digests & Indexes

2. PATENTS ⟹16—PATENTABILITY—IMPROVEMENT.
The slightest changes which effect a new improvement may be patentable; the test is whether the invention is patentable, when considered, not with reference to any one thing in particular, but to everything in general.
[Ed. Note.—For other cases, see Patents, Cent. Dig. §§ 14, 15; Dec. Dig. ⟹16.]

3. PATENTS ⟹81—ANTICIPATION—PRIOR USE.
Prior use, in order to show anticipation, must be proven beyond a reasonable doubt.
[Ed. Note.—For other cases, see Patents, Cent. Dig. § 104; Dec. Dig. ⟹81.]

4. PATENTS ⟹112—ANTICIPATION—PRESUMPTION FROM GRANT.
Where the evidence of anticipation in an infringement suit is not substantially different from that considered by the Patent Office, the presumption is that the patent discloses such an amount of change from the prior art as to amount to invention.
[Ed. Note.—For other cases, see Patents, Cent. Dig. §§ 162–165; Dec. Dig. ⟹112.]

5. PATENTS ⟹328—VALIDITY AND INFRINGEMENT—KNIT FABRICS.
The Steiner patent, No. 886,886, for a knit fabric and method of making same, which consists of curling the yarn before knitting to produce a fabric of the astrakhan type, was not anticipated, and discloses invention; also *held* infringed.

In Equity. Suit by the Salt's Textile Manufacturing Company against the Tingue Manufacturing Company. On final hearing. Decree for complainant.

See, also, 208 Fed. 156.

Charles S. Jones, of New York City, for plaintiff.

Stephen J. Cox and Clarence G. Campbell, both of New York City, for defendant.

THOMAS, District Judge. This is a suit for infringement of letters patent of the United States, No. 886,886, granted to Richard J. Steiner, assignor of the plaintiff, May 5, 1908, for an invention relating to a knit fabric manufactured upon a stockinet machine.

The patent has six claims, the first and second of which cover the fabric and the remaining four the method of making it. The invention of the patent relates to a knit fabric of the astrakhan type, having back and face yarns; the latter being united to the former by tying-in yarn and the face yarn being curled, so as to produce by the knitting operation itself a fabric having a mass of closely and uniformly disposed links or curls over its entire face. And it seems fairly inferable from the prior art, as disclosed by the evidence and disclaimed by the specification, and by the proceedings in the Patent Office preliminary to the granting of the patent, that the real advance in the art made by the patentee was in curling the face yarns prior to the knitting operation, although the use of curled or crimped yarns was old, so that there was obtained on the knitting cylinder a fabric in which the curls are of substantially uniform height, approximately regular in form, and so close together that the back is not materially exposed. The operations of dyeing, washing, singeing, and shearing,

which follow after the fabric is taken from the machine, are not relied upon to produce the curled effect of the fabric. Briefly, the essential feature of the manufacture is the making of a knit fabric by first curling and setting the face yarn to the described form and condition, then straightening the yarn so that it may be properly placed upon the needles, and then permitting the yarn to resume its normal condition on the needles. It is unfair to the patentee to impose upon the patent a construction which makes it one for curled yarns. The patent is rather for a knit fabric in which is used a face yarn curled, previous to the knitting, to the condition it assumes in the fabric. The patentee is very explicit as to what is meant by a curled yarn. In his specification he not only describes the yarn, but illustrates it, as in the following language:

"The yarn which is to constitute the face is first run through a curling machine to produce a yarn having a succession of substantially uniform rings, curls, or loops as indicated, for example, in Fig. 3; the rings or curls being regular in form and closely disposed."

Later on in his specification he says:

"A very distinct and important advantage results from the use of a previously curled yarn, in that the rings or curls become set in the yarn prior to the knitting operation, and are thus not liable to uncurl or assume an abnormal condition in the finished fabric."

This illustration and description make certain what it is that the patent proposes to use, and it is clear that what the patentee intended to describe and claim was a yarn having regular and closely disposed links, such as appear in the patent. This view of the patent is strengthened by the fact that the patent was granted after an appeal from the primary examiner, who rejected the applications upon the Bywater patent, No. 374,888, the Wrightson patent, No. 393,734, the Marchetti patent, No. 436,368, and the British patent No. 3,447 of 1894, for the reason, stated by the examiners in chief, that there was not—

"in either the Bywater or Wrightson patent a fabric in which the face yarn is curled to the condition it assumes in the fabric previous to the knitting operation; nor do we think that applicant's product is lacking in invention because it so happened that Marchetti disclosed the use of previously curled yarn in the manufacture of a cut pile fabric. At most Marchetti's disclosure only goes to show that a previously curled yarn was old in the art of woven pile fabrics."

[1] As the same patent may cover both a process and a product, in the absence of any self-imposed restriction by the patentee, the claims can stand together, if both the process and the product are new and useful. Merrill v. Yeomans, 94 U. S. 568, 24 L. Ed. 235. And if the process and the product of the defendant are identical with that shown by the patent, there is a presumption of utility, especially if infringement is not denied, as in the case here. It does not lie in the mouth of an infringer to deny the utility of a patent. The presumptions are, at least, against him. Du Bois v. Kirk, 158 U. S. 58, 64, 15 Sup. Ct. 729, 39 L. Ed. 895, and the cases therein cited. Moreover, if an infringer has seen fit to depart from the many articles and methods open to his use, and to adopt that of the patentee, there is

a strong indication that the patent marks a distinct and useful advance in the progress of the art. Brammer v. Schroeder, 106 Fed. 918, 46 C. C. A. 41.

The vital point of this controversy results in the fact that the evidence, taken as a whole, discloses that prior to the Steiner invention the art of making fabrics contained no knit fabric having a face yarn curled previously to the knitting operation and to the condition it assumes in the finished fabric. Even if the evidence does show that a woven fabric had been made with a curled yarn prior to the use by Steiner of a curled yarn in a knit fabric, it does not follow that Steiner's fabric did not involve invention, especially if, by using the curled yarn in his patent, he accomplished a new and useful result. It is immaterial whether the evidence shows a case of direct anticipation—that is, whether the patented article or method and those alleged to anticipate it are compared as a whole—or a case where the patented improvement rests upon changes in form, situation or degree.

[2, 3] The slightest changes which effect a new improvement may be patentable. The test in such cases is whether the invention is patentable generally—that is, when considered, not with reference to any one thing in particular, but to everything in general; and in such cases the prior uses, in order to show anticipation, as in cases of direct anticipation, "must be proven by evidence so cogent as to leave no reasonable doubt in the mind of the court." Mueller v. Glauber, 184 Fed. 609, 106 C. C. A. 613; Deering v. Winona Harvester Works, 155 U. S. 286, 15 Sup. Ct. 118, 39 L. Ed. 153; Barbed Wire Patent, 143 U. S. 275, 12 Sup. Ct. 443, 450, 36 L. Ed. 154; Cantrell v. Wallick, 117 U. S. 689, 6 Sup. Ct. 970, 29 L. Ed. 1017.

The prior published art consists of the patents referred to by the Patent Office pending the application for the patent, and the British patent of 1861 to Tolhausen, No. 2,126, the British patent to Spannagel of 1885, No. 9,465, and a publication by Posselt. The British patents and the Rosselt publication do not disclose any art substantially different from the American patents. These were relied upon by the primary examiner in rejecting the patent.

The prior public uses relied upon are: (1) The Knit Fabric Company's prior use; (2) the French & Ward prior use; and (3) the Hanifen prior use. The prior published art and the three prior uses will be discussed in order.

[4] I. It is sufficient to say of the prior published art that the additional British patents and the Posselt publication do not disclose any art substantially different from that under consideration by the Patent Office when the patent was granted. The Patent Office ruled that these patents did not disclose equivalents of the Steiner patent. The defendant has introduced no expert testimony explaining these patents and publications, and the court is left to the presumption that the patent itself possesses such an amount of change from the prior art as to entitle it to the presumption which attaches to a patent. Coffin v. Ogden, 18 Wall. 120, 124, 21 L. Ed. 821; Cantrell v. Wallick, 117 U. S. 689, 695, 6 Sup. Ct. 970, 29 L. Ed. 1017; Hutter v. Broome (C. C.) 114 Fed. 655, 657.

II. The alleged prior use by the Knit Fabric Company of curled yarn, so strenuously relied upon by the defendant, may possibly show a small amount of *crimped* yarn; but it certainly was not *curled,* nor was it the curled yarn of the patent. Its production was largely accidental, and its utility was not perceived by any one, and therefore could not constitute anticipation. Topliff v. Topliff, 145 U. S. 156, 12 Sup. Ct. 825, 36 L. Ed. 658. The other "spiral spring" or "corkscrew" yarn of the Knit Fabric Company must be regarded, in view of the evidence, as nothing more than an unsuccessful, abandoned experiment, and not accessible to the public, and therefore not amounting to anticipation. Matheson v. Campbell (C. C.) 69 Fed. 597, 604.

III. The French & Ward prior use consisted only of a glove astrakhan or glove cloth, and the yarn used in making it was a hard-twisted, two-ply, straight worsted, which was made in the ordinary way for making regular astrakhan, and the loops which appeared upon the finished fabric were due simply to the character of the hard-twisted yarn, which enabled it to loop or knit up after the finishing operation. The testimony as to this prior art has not the essential element of the proof required. Deering v. Winona Harvester Works, supra.

IV. The Hanifen prior use relates to a fabric knit by using the Bywater patent, No. 374,888, and which the patent in suit admits and disclaims. It was really nothing but crimped yarn, as I view the evidence, unsuited for commercial purposes when it was made, and equally ill-fitted for present day methods. At the most it was a knit fabric, spun and raveled to make it a wavy yarn. No satisfactory evidence of the mechanism or the yarns has been produced, and the evidence comes within the same condemnation as do the other prior uses.

[5] These alleged prior uses, taken as a whole, go little, if any, further than does the prior published art. The substance of the whole matter is this: Glove cloth, having on its face a series of loops, is the only fabric made by any of the alleged prior users. It was sold in comparatively small quantities. A previously curled yarn was not used in such manufacture, nor was there used a yarn curled to the condition it assumes in the fabric. All that can be said of any of these prior uses is that a wavy or crimped yarn, but not a curled yarn, was used by some of these manufacturers, while others used simply a hard-twisted, straight yarn. Furthermore, this glove astrakhan, or glove cloth, was never recognized by any one as the same as that of the Steiner patent, and it never effected the kind of results attained by the patented fabric, because it lacked the very thing which gave the latter its success as an imitation of real Persian lamb.

The conclusion is imperative that the defendant has not discharged itself of the burden cast upon it, and that the patent must be held valid.

Let an injunction issue, together with a reference to a master for an accounting. Decree accordingly.

DUNDON v. PEDERSEN.

(District Court, N. D. California, Second Division. June 29, 1914.)

No. 15327.

1. PATENTS ⟹328—INFRINGEMENT—DOOR FOR DIGESTERS.
The Dundon patent, No. 653,503, for a door for digesters, adapted for use in canneries where steam is used for cooking the canned product, construed, and *held* infringed.

2. PATENTS ⟹237—INFRINGEMENT—SUBSTITUTION OF EQUIVALENT PARTS—"SUBSTITUTION OF PATENTLY EQUIVALENT MEANS."
The "substitution of patently equivalent means" to perform one of the functions of an old element of a patented combination, and that a subsidiary one, which works no change in the unitary result, does not avoid infringement.

[Ed. Note.—For other cases, see Patents, Cent. Dig. §§ 374, 375; Dec. Dig. ⟹237.]

In Equity. Suit by Patrick F. Dundon against L. A. Pedersen. On final hearing. Decree for complainant. Decree affirmed, 220 Fed. 309.

Francis M. Wright, of San Francisco, Cal., for complainant.
Miller & White, of San Francisco, Cal., for defendant.

VAN FLEET, District Judge. [1] This is a bill to enjoin the infringement of a patent, No. 653,503, issued to plaintiff on July 10, 1900, covering "doors for digesters"—a steam-tight door for use on retorts in canneries and other establishments where the processing of the product is by cooking with steam, the successful operation of which requires the introduction of steam of considerable pressure. To meet the requirements of the process the door of the retort is required to be large enough to enable the cans or other containers to be readily and quickly placed in and removed from the retort. It must be heavy to withstand the pressure of the steam, be capable of being opened and closed quickly, and to work efficiently it must be made absolutely steam-tight. The device of the patent is designed to meet these necessities, and, briefly described, is constructed substantially as follows:

The door is not itself hinged to its frame, but is swung on two bars, called "pressure bars," which pass horizontally through housings secured to its outer surface or face, and these bars form the hinges for the door, being hinged at one end to the door frame in such manner that when the door is swung to it closes squarely in its seat; the other end of each bar being engaged and secured by a cam connected with a link hinged to the opposite side of the frame. When closed, the door bears against a gasket of suitable material set in a channel in the inner face of the frame, and is pressed firmly and evenly against the gasket by means of four screws passing through the housings and pressure bars and applied to its outer surface in such manner that, when the pressure of the screws is applied, the door fits at all points tightly on the gasket and thus prevents the escape of steam. The housings necessarily fit loosely upon the pressure bars to permit the door to respond to the pressure of the screws, and this looseness, having a natural tenden-

cy to allow a play of the door upon the bars detrimental to its ready and perfect operation in closing, is avoided or taken up by employing what is designated as "radius links." This element and its function is thus described in the patent:

"The housings *11*, as will be seen, permit some play of the bars *5*, and the door *2* is not held rigidly thereby. To prevent lost or undesirable motion of this kind, I provide the radius links *18*, attached to the lug *19* on the door frame and lug *22* on the door; the fixed pivot *20* being coaxial with the pivots *21* of the bars *5*. The cams *10* are made with more or less eccentricity, as the amount of pressure required, and when set for closing, as in Fig. II, the extreme of the eccentric passes the point of impingement, so the cam is locked or held against accidental release. In this manner it will be seen that the tendency of the door *2* to turn in its flat plane about the pivots *21* is resisted by the links *18*, thus producing the effect of closely fitting hinges and a true and steady movement of the door in opening and closing."

It is in this last-described feature that the novelty of the combination is disclosed, all the other elements being found in a former patent issued to plaintiff in 1890. The subjoined drawing is a correct portrayal of the device:

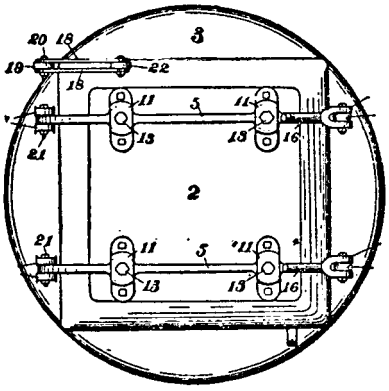

Defendant, having need of retort doors for use in his fish cannery in Alaska, purchased a number from plaintiff made in accordance with the patent as above described and has been using them therein, but, finding that he required an additional number, determined to construct them for himself. He accordingly procured castings to be made in San Francisco of the different parts, shipped them to his cannery, and there assembled them. The doors thus built differ structurally from that of plaintiff in these particulars only: The pressure bars, while attached to the door by housings in the same manner, do not constitute hinges for the door it being hinged independently to the frame by ordinary hinges loosely pivoted to admit of the door swinging flatly and evenly into its seat, and, the door being closed, the pressure bars are secured to the frame at both ends by appropriate fastenings. In other respects than serving as hinges, these bars perform the same functions as in plaintiff's device; the pressure being exerted through screws passing through the housings and bars and pressing the door firmly upon the gasket.

This loose hinging allowing, as in plaintiff's device, a play or sagging of the door, interfering with its ready closing and adjustment in its seat, the defendant, to overcome that tendency, employs what he terms a "tie rod," being a single bar or rod forming a tie or link pivoted to the door and frame in a precisely similar manner and in the same relative position, and performing exactly the same function as the so-

called "radius links" of plaintiff's device. In all other respects the defendant's device is the duplicate of that of plaintiff. It is the use of this structure, and particularly the element called a "tie rod," which it is claimed constitutes an infringement of plaintiff's patent, and whether it does or not is the one question presented, since noninfringement is the sole defense; and this defense is rested upon plaintiff's evidence, no testimony being taken on behalf of the defendant.

The question is made to turn upon the construction of claim 3 of the patent, that being the claim charged to have been infringed. The claim is in these words:

"3. In a hermetically closing door, pressing bars to force the door upon its seat, bearing at four or more points thereon, forming also hinges for the door, and in combination therewith the radius links *18* pivoted in the same axial line as the pressing bars and holding the door in adjustment thereon, substantially as specified."

That defendant's device constitutes an infringement of this claim is, I think, obvious, unless the differences in structure above noted can be held to be elemental and such as to change its co-operative or unitary action from that of the combination of the patent. Defendant's contention is that these differences are material, and that its device cannot be held to infringe without ignoring certain limitations in the language of the claim which it is said constitute substantial features of plaintiff's invention, and which the court is therefore not at liberty to disregard. The first of these, it is claimed, is found in the words, "forming also hinges for the door," in describing the use of the pressure bars. It is said that this language expresses a functional limitation which restricts the combination to one in which the pressing bars not only perform the function of pressure bars, but also the additional function of hinges for the door.

[2] Is the difference in function between the two devices in this respect so material as to avoid infringement under the rule invoked? As indicated above, the whole element of novelty in plaintiff's combination is the means of taking up or avoiding the lost motion incident to the loose manner required in hanging the door where pressure bars are employed. All other elements of the combination are old, and covered by plaintiff's prior patent. Is the substitution of a patently equivalent means to perform one of the functions, and that a subsidiary one, of an old element of the combination, which works no essential change in the unitary result—for that is obviously all the defendant's change involves—sufficient to defeat plaintiff's right to protection of that which is new and valuable in his invention?

It seems to me that such a result would be subordinating substance to mere form, and I do not think the claim is to be given a construction so narrow. It is not an instance, to my mind, where form partakes of the substance; but the case, it seems to me, falls within the very salutary principle announced in Winans v. Denmead, 56 U. S. (15 How.) 330, 342, 14 L. Ed. 717, where it is said:

"Where form and substance are inseparable, it is enough to look at the form only. Where they are separable, where the whole substance of the invention may be copied in a different form, it is the duty of courts and juries to look through the form for the substance of the invention—for that which

entitles the inventor to his patent, and which the patent was designed to secure. Where that is found, there is an infringement; and it is not a defense that it is embodied in a form not described, and in terms claimed by the patentee."

It is next contended that claim 3 restricts the combination to one in which "more than one link or tie rod is used to keep the door in adjustment;" and it is said:

"It will be noted that the word 'links' is in the plural, thus calling for at least two links or tie rods. It is not contended that defendant uses more than one tie rod in his device to keep the door from sagging. It is obvious, therefore, that the defendant has dispensed with one of the elements of claim 3 and has substituted nothing in its place. For this reason the defendant's device does not infringe."

But this contention has even less merit than the first, for it is quite obvious that it is based upon a clear misapprehension of the construction of plaintiff's combination as contemplated and described in the patent. This, I think, sufficiently appears from the specifications, but it appears very clearly from the drawings attached to the patent (which may be looked to in case of doubt—Walker on Patents, § 182) that this feature of the device, which is given a plural designation, is but in fact a single element. It is doubtless given its plural name by reason of the fact that it is composed of two parallel pieces of metal of uniform length, both pivoted to the same lug at each end and forming but one link or stay,—being thus constructed, very likely, for additional strength. It is no less a single element as disclosed in plaintiff's combination than the "tie rod" of defendant's device, which, as stated, is made from a single rod or bar, and like the latter is pivoted to the door and frame in the same manner.

It is further said of this element that it is given a functional limitation in the claim which distinguishes it from the office of the tie rod of defendant's device. This is based upon the language, "pivoted in the same axial line as the pressing bars and holding the door in adjustment thereon." And defendant says:

"According to this limitation the links *18* must both be pivoted in the same axial line in which the pressing bars are pivoted. In the defendant's device, the pressing bars are not pivoted at all, and are not connected to the retort wall in the same axial line in which the single tie rod is pivoted. It will also be noted that the words 'holding the door in adjustment thereon' are a functional limitation, and restrict the combination to one in which two or more links or tie rods hold the door in adjustment on the pressing bars. In defendant's device, the door is not supported by the pressing bars, but by the hinges. Therefore the single tie rod used by defendant cannot hold the door in adjustment on the pressing bars, which are, in fact, supported by the door. Such tie rod or link merely prevents the door from sagging upon its hinges, thus keeping it in adjustment relative to the hinges, and not relative to the pressing bars."

These criticisms are largely answered by what has already been said. It is quite true that defendant's tie rod is not pivoted in the same axial line with the pressing bars, because the latter in his device do not, as we have seen, form hinges. But the rod or link is pivoted in an axial line with the hinges which defendant has substituted for the pressure bars to perform that office; and while, as defendant says, his

tie rod cannot, for obvious reasons, hold the door in adjustment on the bars, it does hold it in adjustment on the substitute hinges, and, as heretofore shown, subserves the same purpose in that relation as the radius links of plaintiff.

These considerations are sufficient, I think, to show that the differences in construction of the device of the defendant are not such as to avoid infringement of plaintiff's patent. Plaintiff is accordingly entitled to a decree as prayed.

ELLIOTT MACH. CO. v. CENTER.

(District Court, W. D. Michigan, S. D. February 20, 1915.)

1. PATENTS ⟹214—INFRINGEMENT—REVOCATION OF LICENSE.

Complainant furnished to defendant a patented machine for attaching shoe buttons, bearing a plate stating that it was lent or leased and accepted to use wire bearing complainant's trade-mark only. There was no other contract between the parties. Complainant furnished wire in coils each sufficient for 1,000 operations of the machine, and in the price charged included a royalty or license fee for the use of the machine for the 1,000 operations. *Held*, that the contract was in effect a license, revocable at will on completion of the number of operations for which the license fee had been paid, and that on its revocation by complainant the further use of the machine by defendant constituted an infringement of the patents.

[Ed. Note.—For other cases, see Patents, Cent. Dig. §§ 321–327; Dec. Dig. ⟹214.]

2. MONOPOLIES ⟹10—CLAYTON ANTI-TRUST ACT—CONSTRUCTION—APPLICATION TO EXISTING CONTRACTS.

Clayton Anti-Trust Act Oct. 15, 1914, c. 323, § 3, 38 Stat. 731, which makes it unlawful to lease or sell machinery, etc., on any condition or agreement which will tend to prevent the lessee or purchaser from dealing with competitors, is applicable to a continuing contract of lease, although made before its passage.

[Ed. Note.—For other cases, see Monopolies, Cent. Dig. § 9; Dec. Dig. ⟹10.]

3. COMMERCE ⟹3—CONTRACTS RELATING TO INTERSTATE COMMERCE—POWER OF CONGRESS—SUBSEQUENT LEGISLATION.

All persons entering into contracts involving interstate commerce must do so subject to the right of Congress thereafter to control, regulate, or prohibit the performance thereof.

[Ed. Note.—For other cases, see Commerce, Cent. Dig. § 3; Dec. Dig. ⟹3.]

4. CONSTITUTIONAL LAW ⟹155—CONTRACTS—EFFECT OF SUBSEQUENT LEGISLATION.

A contract to do a thing, lawful when made, may be avoided by subsequent legislation making it unlawful, and an act of Congress may affect contracts or rights which had their inception before its passage.

[Ed. Note.—For other cases, see Constitutional Law, Cent. Dig. §§ 291, 431; Dec. Dig. ⟹155.]

5. EQUITY ⟹54—PRINCIPLES—ENFORCING INEQUITABLE DEMANDS.

While courts will not refrain from declaring and applying legal principles, because peculiar hardships will result in isolated instances, they

are not to be persuaded consciously to do injustice in violation of those principles.

[Ed. Note.—For other cases, see Equity, Dec. Dig. ⟹54.]

In Equity. Suit by the Elliott Machine Company against Albert M. Center. On motion by defendant to dismiss. Denied.

Wilson & Johnson, of Grand Rapids, Mich., for complainant.
Taggart & Taggart, of Grand Rapids, Mich., for defendant.

SESSIONS, District Judge. [1] According to the allegations of the bill of complaint, plaintiff is the owner of three patents for improvements in button setting machines and attachments thereto. It is, and for several years has been, manufacturing and leasing or licensing shoe button attaching machines constructed under its patents, and, in so doing, is and has been engaged in interstate commerce throughout the United States. Prior to the enactment of the Clayton Anti-Trust Act, so called, in October, 1914, plaintiff's machines were loaned or leased to users, including defendant, on the condition that only its wire should be used in their operation. Attached to each machine so loaned or leased was a metal plate bearing the following inscription:

"This machine is the property of the Elliott Machine Company and is loaned to and accepted by the user to use wire furnished under the company's trade-mark only."

No other agreement than that stated upon the plate was made with defendant or other users. Plaintiff's wire, the use of which was thus required, was put up in coils. Each coil contained a sufficient amount of wire for 1,000 operations of the machine, which was so constructed as to lock automatically upon the completion of each 1,000 operations. For that reason a key with which to unlock the machine was attached to each coil of wire. The wire and key were furnished by plaintiff to its customers for about 85 cents per coil, which included both the price of the wire and the royalty for the use of the patented machine to fasten 1,000 buttons.

Since October, 1914, plaintiff, believing that the further continuance and performance of its former contracts would be a violation of section 3 of the Clayton Act, has notified the users of its machine, including defendant, that they will no longer be required to purchase or use its wire, and that a royalty of 75 cents must be paid for the use of each machine to make 1,000 operations, or to fasten 1,000 shoe buttons. Plaintiff has continued to manufacture wire, but sells the same, without the key, for 10 cents per coil, which is a fair price for the wire alone, without any royalty for the use of the machine.

Defendant has purchased wire from plaintiff's agents at 10 cents per coil, and has continued to use the patented machine, but has refused to pay the royalty demanded. This suit is brought to restrain further alleged infringement of plaintiff's patents and for the usual accounting. Defendant's motion to dismiss is founded primarily upon the claim that section 3 of the Clayton Act is not retroactive and cannot

affect contracts, like the one here involved, made and entered into before its enactment.

One vice of defendant's contention lies in the fact that the contract between these parties does not constitute an irrevocable license to use the patented machine during the full period of the life of the patents, as claimed, but, at most, is a license which may be revoked by plaintiff or repudiated by defendant at any time when 1,000 operations of the machine have been completed for which a royalty has been paid. It is true that the notice or inscription upon the plate attached to the machine is silent as to both time and royalties, but the conduct of the parties in performing the contract shows clearly and conclusively that their mutual intention and agreement was that a royalty was to be included in the price of the wire and that the right to use the machine was to be limited to the operations thereof for which such royalty had been paid. In terms, the contract is a loan and not a license. It follows, regardless of whether or not the specific transactions between these parties involved interstate commerce, that defendant's right to use plaintiff's machine could be terminated at the will of either party and that defendant would be an infringer of plaintiff's patents if he continued to use the machine after his right so to do had been terminated.

[2] However, the principal question argued at the hearing of this motion to dismiss was that of the application and effect of the Clayton Act to and upon the contract between these parties, which was made and entered into prior to the congressional enactment. In the discussion of that question, counsel for both parties have assumed that the contract is single, and also that it is one which, if made at the present time, would fall within the ban of section 3 of the act. Counsel for defendant earnestly insists that, even if Congress so intended, the statute cannot be construed to apply to pre-existing contracts, and to prohibit their performance and enforcement, without violating fundamental and constitutional rights. The statute does not in terms except from its operation any agreements or contracts, past, present, or future, and, in the absence of such exception, it is to be presumed that Congress intended to prohibit, not only the making of future contracts, but also the further performance of past contracts of the kind specified.

[3, 4] Congress derives its power to enact such legislation from the commerce clause of the Constitution, and the power so conferred is broad, comprehensive and all embracing. All persons entering into contracts involving interstate commerce must do so subject to the right of Congress thereafter to control, regulate, or prohibit the performance thereof. "Every owner of property holds the same subject to such action as the sovereign power of the state may, in the exercise of its legitimate sovereignty, adopt in relation to it." It is now too well settled to admit of controversy that a contract to do a thing, lawful when made, may be avoided by subsequent legislation making it unlawful, and that an act of Congress may lawfully affect rights which had their inception before its passage. Louisville & Nashville Railroad Co. v. Mottley, 219 U. S. 467, 31 Sup. Ct. 265, 55 L. Ed. 297, 34 L. R. A. (N. S.) 671; Armour Packing Co. v. United States, 209 U. S. 56, 28 Sup. Ct. 428, 52 L. Ed. 681; Phila., Balt. & Wash. R. R. v. Schu-

bert, 224 U. S. 603, 612, 613, 32 Sup. Ct. 589, 56 L. Ed. 911; Addyston Pipe & Steel Co. v. United States, 175 U. S. 211, 228, 234, 20 Sup. Ct. 96, 44 L. Ed. 136; Portland Ry. Co. v. Oregon R. R. Comm., 229 U. S. 397, 412, 413, 33 Sup. Ct. 820, 57 L. Ed. 1248; Atlantic Coast Line R. Co. v. Finn, 195 Fed. 685, 690, 117 C. C. A. 1; Holt v. Henley, 193 Fed. 1020, 1021, 113 C. C. A. 87.

[5] In the case made by the bill, which for the purposes of this motion must be accepted as true, defendant's claims are shown to be inequitable. He seeks to compel plaintiff to yield to him without consideration property for which he has fairly agreed to pay an adequate price. While courts would not refrain from declaring and applying legal principles, because peculiar hardships will result in isolated instances, they are not to be persuaded consciously to do injustice in violation of those principles.

The motion is denied.

WILEY v. GRAND TRUNK RY. OF CANADA.

(District Court, W. D. New York. October 1, 1915.)

1. CARRIERS ⟹316—NEW TRIAL ⟹68—INJURIES TO PASSENGERS—VERDICT—CONCLUSIVENESS—NEGLIGENCE.

Where defendant railway company, in an action for personal injuries to a passenger, failed to offer evidence showing freedom from negligence, and the jury found for the plaintiff, the verdict is conclusive on the question of defendant's negligence, since an injurious accident, when the passenger exercises due care, is prima facie evidence of negligence by the carrier.

[Ed. Note.—For other cases, see Carriers, Cent. Dig. §§ 1261, 1262, 1283, 1285–1294; Dec. Dig. ⟹316; New Trial, Cent. Dig. §§ 135–140; Dec. Dig. ⟹68.]

2. CARRIERS ⟹242—INJURIES TO PASSENGERS—CARETAKERS OF LIVE STOCK—LIMITATION OF LIABILITY.

Plaintiff, in an action in damages for personal injuries against a railway company, was given his transportation as caretaker for stock on a freight train. *Held*, that he was not a gratuitous passenger, prior to Act June 29, 1906, c. 3591, 34 Stat. 584, 585, since his fare was a part of the consideration paid for carrying the stock, nor under that chapter, as originally enacted or as amended by Act April 13, 1908, c. 143, 35 Stat. 60, 61, and Act June 18, 1910, c. 309, 36 Stat. 546 (Comp. St. 1913, § 8563), since by that statute caretakers of stock are expressly excepted.

[Ed. Note.—For other cases, see Carriers, Cent. Dig. § 980; Dec. Dig. ⟹242.]

3. CARRIERS ⟹307—LIMITATION OF LIABILITY—PLACE OF CONTRACT.

Where live stock is carried under a contract, and plaintiff accompanies it as caretaker, the law of the state in which the contract was made governs the right of a carrier to limit its liability to him, in the absence of federal law on the subject, regardless of whether the shipment is interstate or not, since the contract is a single one, and the performance a continuous act.

[Ed. Note.—For other cases, see Carriers, Cent. Dig. §§ 1252–1259, 1491; Dec. Dig. ⟹307.]

4. CARRIERS ⟹307—DUTIES—LIMITATION OF LIABILITY—REASONABLENESS.

A carrier of passengers cannot limit its liability, even with the consent of its customers, against its own negligence, since it has special duties towards its passengers, and any limitation must be reasonable, run-

---

⟹For other cases see same topic & KEY-NUMBER in all Key-Numbered Digests & Indexes

ning only against accidents without negligence on the part of the company.

[Ed. Note.—For other cases, see Carriers, Cent. Dig. §§ 1252–1259, 1491; Dec. Dig. ⚷307.]

At Law. Action by Edward W. Wiley against the Grand Trunk Railway of Canada. Plaintiff was awarded a verdict of $3,500, and defendant moves to set the verdict aside and grant a new trial. Motion denied.

Thomas A. Sullivan, of Buffalo, N. Y., for plaintiff.
John W. Ryan, of Buffalo, N. Y., for defendant.

THOMAS, District Judge. The plaintiff sued to recover damages for personal injuries. The jury awarded him $3,500. This is a motion to set that verdict aside and grant a new trial.

The facts involve the liability of an interstate railway carrier under the anti-pass provisions of the Hepburn Act for personal injuries sustained, through the carrier's negligence, by a plaintiff who was injured while traveling on a drover's pass in the care of live stock. The jurisdiction of this court is founded on diversity of citizenship; the plaintiff being a resident and citizen of the state of New York, and the defendant a Canadian corporation, doing business in this district and operating lines of railway in Canada, New York, and New England.

The injuries were sustained at or near Ridgeway, in Canada, on one of the defendant's lines, in a head-on collision between two trains being run in opposite directions on the same track while under the care, management, and control of the defendant's servants and agents; the plaintiff being, at the time of the collision, in the caboose of one of the colliding trains, in charge of a car of live stock which had been shipped from Bad Axe, in the state of Michigan, on the line of the Pere Marquette Railroad, to Buffalo, over the defendant's railway as a connecting line, and forming with its connecting lines an interstate railway route.

The plaintiff's transportation was furnished on a drover's pass issued in Michigan, by the Pere Marquette railroad, where the carriage was begun and the shipment was received. At the time of the shipment, the Pere Marquette Railroad issued a through bill of lading, which was signed by the plaintiff and the agent of that railroad company in which the plaintiff was furnished transportation from Bad Axe to Buffalo as a necessary caretaker of the live stock included in the bill of lading; the plaintiff at the same time purporting to release the railroads over which he was to travel from any liability for personal injuries sustained by the former through the latter's negligence.

[1] The only evidence offered by the plaintiff on the trial of the issues of fact raised by the pleadings was concerning the collision itself, the nature and extent of the injuries sustained, and other facts tending to prove the amount of damages. No evidence was offered by the defendant tending to show freedom from negligence on its part. As it is now settled law in the federal courts that the happening of an injurious accident is, in passenger cases, where the passenger is in the

exercise of due care, prima facie evidence of negligence on the part of the carrier, and that the burden then rests on the defendant to show that its whole duty was performed, and that the injury was unavoidable by human foresight (Gleeson v. Virginia Midland R'd Co., 140 U. S. 435, 443, 11 Sup. Ct. 859, 35 L. Ed. 458, and cases there cited), the verdict must be taken to be conclusive of the defendant's negligence as alleged in the complaint.

[2] Therefore the only issue raised by this motion is the validity of the release. If the plaintiff had been a gratuitous passenger, there is no doubt but that, under the decisions of the United States Supreme Court, the release would have been valid in the federal courts, in the absence of willful or wanton negligence, irrespective of the Hepburn Act. Northern Pacific Railway Co. v. Adams, 192 U. S. 440, 24 Sup. Ct. 408, 48 L. Ed. 513; Boering v. Chesapeake Beach Ry. Co., 193 U. S. 442, 24 Sup. Ct. 515, 48 L. Ed. 742. But the plaintiff would not have been a gratuitous passenger prior to the Hepburn Act, for the reason that the right to ride without special compensation was given in part consideration of the payment which was principally for other services; and although the plaintiff was being carried on a freight train at the time he sustained the injuries, he would, nevertheless, have been a passenger for hire, and entitled to protection as such, as incidental to the carriage of the stock under his care. Railroad Co. v. Lockwood, 17 Wall. 357, 368, 21 L. Ed. 627; Railway Co. v. Stevens, 95 U. S. 655, 24 L. Ed. 535; Norfolk Southern R. Co. v. Chatman, 222 Fed. 802, —— C. C. A. ——. Hence we are brought to the vital question involved in this motion.

Has Congress, by the Hepburn Act, so called, regulated the invalidity of such a release as is this, to the exclusion of the law of the state? In my judgment it has not. The release does not offend either the letter or spirit of the interstate commerce legislation of Congress. The fourth paragraph of section 1 of the "Act to regulate commerce," as amended June 29, 1906, and in effect January 1, 1907 (chapter 3591, 34 Stat. 584, 585), especially excepts from the anti-pass provisions of the law "necessary caretakers of live stock," and this provision is not varied or affected by the subsequent amendments of April 13, 1908 (chapter 143, 35 Stat. 60, 61), and June 18, 1910 (chapter 309, 36 Stat. 546). This view of the statute is confirmed by a very recent decision of the Circuit Court of Appeals for the Fourth Circuit in Norfolk Southern R. Co. v. Chatman, 222 Fed. 802, —— C. C. A. ——, supra. That case involved substantially the same facts as exist here, in which it was held that a caretaker of live stock, who was transported on his shipping contract, did not come within the statute in question, but was a passenger for hire, and that a release similar to the one herein issued was invalid.

[3] The plaintiff's right to safe carriage and the question whether the relation of passenger and carrier exists in the absence of any federal statute regulating the matter are therefore matters of state law. Southern Pacific Co. v. Schuyler, 227 U. S. 601, 33 Sup. Ct. 277, 57 L. Ed. 662, 43 L. R. A. (N. S.) 901. So that the ultimate question is: What is the state law which influences the validity or invalidity of the

release? The weight of authority, including the United States Supreme Court and the Circuit Court of Appeals for the Second Circuit, is that the invalidity of a release like this is to be determined by the law of the jurisdiction where the carriage was commenced—locus celebrationis—whether the basis of the carrier's liability be regarded as contractual or tortious. The general rule that the nature, the obligation, and the interpretation of a contract are to be governed by the law of the place where it is made, unless the parties at the time of making it have some other law in view, requires a contract of carriage, made in one country, and the performance of which begins there, to be governed by the law of that country, unless the parties, when entering into the contract, clearly manifest a mutual intention that it shall be governed by the law of some other country. The contract in such cases is single, and the performance is one continuous act. Davis v. Chicago, Milwaukee & St. Paul Ry. Co., 93 Wis. 470, 67 N. W. 16, 1132, 33 L. R. A. 654, 57 Am. St. Rep. 935; Brockway v. American Express Co., 168 Mass. 257, 47 N. E. 87; Brockway v. American Express Co., 171 Mass. 159, 50 N. E. 626; Hale v. N. J. Steam Navigation Co., 15 Conn. 539, 39 Am. Dec. 398; Dyke v. Erie Ry. Co., 45 N. Y. 113, 117, 6 Am. Rep. 43; Fish v. Delaware, Lackawanna & Western R. R. Co., 211 N. Y. 374, 105 N. E. 661; Liverpool Steam Co. v. Phenix Ins. Co., 129 U. S. 397, 9 Sup. Ct. 469, 32 L. Ed. 788; The Majestic, 60 Fed. 624, 9 C. C. A. 161, 23 L. R. A. 746 (C. C. A. 2d Cir.). Although The Majestic, supra, was reversed on a writ of certiorari by the Supreme Court (166 U. S. 375, 17 Sup. Ct. 597, 41 L. Ed. 1039), the ground of reversal did not involve the principle stated by Judge Shipman, who delivered the opinion of the Circuit Court of Appeals, that a written agreement, executed and delivered in England, whereby an English corporation agrees to transport a citizen of the United States from England to this country, is to be construed according to the English law; the reversal being based on the proposition that the "conditions" printed on the back of the ticket were notices, and nothing more, and could not be held as a matter of law, whether they were regulations for the conduct of business or limitations upon common-law obligations, to constitute any part of the contract.

[4] By the common law as administered by the court of last resort in the state of Michigan (Weaver v. Ann Arbor R. Co., 139 Mich. 590, 102 N. W. 1037, 5 Ann. Cas. 764, and Eberts v. Detroit, Mt. Clemens & Marine City Ry., 151 Mich. 260, 115 N. W. 43) and by the Supreme Court of the United States (Railroad Co. v. Lockwood and Railway Co. v. Stevens, supra) and which latter rulings of the Supreme Court are obligatory on this court as a matter of general commercial law, the release was invalid. These cases lay down, as the test applicable to every limitation of the common-law liability of a carrier of passengers, its just and reasonable character, and they are rested upon the principle that common carriers of passengers have special duties to discharge, from which they are not able to exonerate themselves, even with the consent of their customers, and that special contracts made by them with their customers are good and valid only

to the extent of excusing them, for example, for all losses happening from accident without any negligence or fraud on their part, but that an exemption from liability for negligence is repugnant to the public good, to the Constitution, and therefore inoperative.

This view of the law dispenses with any consideration of the Canadian law, which has been discussed at length by counsel.

The motion to set aside the verdict is denied.

Ex parte CHIN HIM et al.

(District Court, W. D. New York. July 26, 1915.)

1. ALIENS ⚷24—IMMIGRATION—DEPORTATION.

Immigration Act Feb. 20, 1907, c. 1134, 34 Stat. 898, applies to Chinese laborers irregularly coming to this country, notwithstanding the special Chinese Exclusion Acts, and such persons may be proceeded against under the general act.

[Ed. Note.—For other cases, see Aliens, Cent. Dig. §§ 76–78; Dec. Dig. ⚷24.]

2. ALIENS ⚷32—DEPORTATION—ORDERS OF DEPORTATION.

Under the Immigration Act, the Department of Labor may order the deportation of an alien immigrant to the country from which he originally came, notwithstanding his immediate entry into this country was from Canada.

[Ed. Note.—For other cases, see Aliens, Cent. Dig. §§ 84, 92–95; Dec. Dig. ⚷32.]

3. ALIENS ⚷32—DEPORTATION—POWER OF COURT.

The courts cannot review the weight or admissibility of the evidence on the question whether an alien was unlawfully in the country, and a decision to that effect by the Department of Labor, supported by any evidence, is conclusive.

[Ed. Note.—For other cases, see Aliens, Cent. Dig. §§ 84, 92–95; Dec. Dig. ⚷32.]

4. ALIENS ⚷32—PRESUMPTIONS—ALIENAGE.

There is a presumption that a person of Mongolian race is an alien, which can be overthrown only by clear and convincing testimony as to his birthplace.

[Ed. Note.—For other cases, see Aliens, Cent. Dig. §§ 84, 92–95; Dec. Dig. ⚷32.]

5. ALIENS ⚷32—DEPORTATION—CHINESE PERSONS.

Testimony by a Chinese person that he was born in the United States is incompetent to prove his citizenship.

[Ed. Note.—For other cases, see Aliens, Cent. Dig. §§ 84, 92–95; Dec. Dig. ⚷32.]

6. HABEAS CORPUS ⚷30—DISCHARGE OF ALIEN—ORDER OF ARREST—EFFECT OF ERRORS.

Where an alien is unlawfully in the country, he cannot procure discharge on habeas corpus because the original order of his arrest was unauthorized.

[Ed. Note.—For other cases, see Habeas Corpus, Cent. Dig. § 25; Dec. Dig. ⚷30.]

At Law. In the matter of the petitions of Chin Him, alias Chin Ham, Lee Chong, alias Chang Lee, Mark Seon, alias Charles Mark,

---

⚷For other cases see same topic & KEY-NUMBER in all Key-Numbered Digests & Indexes

Arnk Bing, alias Darnk Bing, Arnk Suen, alias Dong Song, Lo Sui On, alias Lo On, and Low Foo, alias Low Hae Foo (Lee Wugh), for writs of habeas corpus. Writs dismissed.

Dilworth M. Silver, of Buffalo, N. Y., for petitioners.

Donald Bain, Asst. U. S. Dist. Atty., of Buffalo, N. Y., for respondent.

THOMAS, District Judge. These proceedings arise on returns to writs of habeas corpus whereby the petitioners, who had come into the United States from Canada, seek to secure their discharge from the custody of the immigration officials at the port of Buffalo, by whom they are now detained by virtue of warrants issued by the Acting Secretary of Labor, ordering that they be deported to China. The several petitions present substantially the same state of facts, at least so far as involves the decision and the view of the law taken by the court, and they are therefore disposed of together as one case. The only difference in the several cases is that Mark Seon, alias Charles Mark, claims that he was born in the United States and never left it; the other relators claiming to have been born here and subsequently removed.

The petition in each case charges that the warrant is void because (1) the proceedings were instituted against the relators under and in pursuance to the provisions of Immigration Act Feb. 20, 1907, c. 1134, 34 Stat. 898, and the amendments thereto, but that the warrant was in fact issued under Chinese Exclusion Act April 27, 1904, c. 1630, 33 Stat. 394, 428, and the rules thereunder, and that the immigration officers cannot invoke the provisions of both statutes against the relators; and (2) the relators are not aliens, but citizens of the United States, by reason of being born herein, and as such are entitled to a judicial determination by a competent court under the law of the land upon the question of citizenship, and that the immigration authorities have no jurisdiction over them.

Upon the filing the petitions, writs of habeas corpus were issued, to which returns were made setting forth, in substance, that each of the petitioners is in custody and detained by, under, and pursuant to warrants of arrest and deportation granted and issued by the Acting Secretary of Labor of the United States, directed to the United States Commissioner of Immigration at Montreal, or to any immigrant inspector in the service of the United States, commanding the arrest of the petitioners on the charges as set forth in the several warrants of arrest; that the petitioners were duly granted a hearing on the charges set forth in said warrants of arrest by the immigration inspector in charge, a copy of the minutes and a report of the proceedings taken upon the hearings being attached to and made a part of the return; that these minutes and reports of the proceedings were duly forwarded by the immigration inspector to the Secretary of Labor of the United States for his decision and action thereon; and that the Acting Secretary of Labor thereupon issued warrants of deportation under which warrants the petitioners are held by the respondent; that the warrants of arrest and the warrants of deportation were properly

and lawfully granted and issued; that the petitioners are alien immigrants, subject to the immigration laws of the United States; that the Acting Secretary of Labor had lawful authority to issue said warrants, and that the respondent was duly authorized to examine the petitioners as to their rights to enter and be in the United States and to make a report of the examination to the Secretary of Labor; that the petitioners had a fair hearing and were granted their full legal rights in the premises.

These returns were traversed, and hearings had on the issues raised thereon; no testimony being offered.

[1, 2] Since the decision of the Supreme Court in United States v. Wong You, 223 U. S. 67, 32 Sup. Ct. 195, 56 L. Ed. 354, there is no longer any question but that Alien Immigration Act Feb. 20, 1907, c. 1134, § 36, 34 Stat. 898, 908 (Comp. St. 1913, 4285), applies to Chinese laborers irregularly coming to this country, notwithstanding the special acts relating to the exclusion of Chinese. This decision completely disposes of and sets at rest any possible contention that they can be dealt with only under the Chinese Exclusion Acts of earlier date. There is also no remaining doubt as to the right of the Department of Labor to order the deportation of an alien immigrant to the country from which he originally came, notwithstanding his immediate entry into this country may have been from Canada. Lewis v. Frick, 233 U. S. 291, 302, 34 Sup. Ct. 488, 58 L. Ed. 967. In the case just cited the question was whether the alien should have been deported to Canada, whence he came upon the occasion of his unlawful entry into the country, rather than to Russia, the land of his birth, from which he came six years earlier. It was held that the act admitted of the return of the alien to Russia. The court in the course of its opinion said on page 303 of 233 U. S., on page 493 of 34 Sup. Ct. (58 L. Ed. 967):

"Respecting this matter, the sections are somewhat lacking in clearness. But, at least, section 35 indicates a legislative intent that aliens subject to deportation shall be taken to trans-Atlantic or trans-Pacific ports, if they came thence, rather than to foreign territory on this continent, although it may have been crossed on the way to this country."

[3] This ruling of the Supreme Court has been very recently followed by the Circuit Court of Appeals of the Second Circuit in Lee Sim v. United States, 218 Fed. 432, 134 C. C. A. 232. Furthermore, it is now definitely established that, if the Department of Labor has found that an alien is unlawfully in the United States, a warrant of deportation can lawfully issue, provided a fair, even though a summary, hearing has been given in ascertaining that fact, if there is any proof tending to sustain the charge. It is not open to the courts to consider either admissibility or weight of evidence, and the courts cannot interfere if anything was offered which tends, although slightly, to sustain the charge; the decision of the department being in such cases binding upon the courts. Lewis v. Frick, 233 U. S. 291, 34 Sup. Ct. 488, 58 L. Ed. 967; United States v. Petkos, 214 Fed. 978, 131 C. C. A. 274.

[4, 5] And, finally, as was held in Lee Sim v. United States, supra, there is, in a proceeding to deport a person of the Mongolian race, a natural presumption that he is an alien, which can only be overthrown

by clear and convincing evidence; his own testimony as to his birthplace not being competent evidence of his United States citizenship, as he could not possibly know the fact. So that the only question in cases like this is whether the immigrant was accorded a fair hearing by the authorities to whom Congress has intrusted the question. The petitioners were accorded a fair hearing in these cases, as the returns show. Their testimony was taken and recorded, and they were given the right to employ counsel, if they desired. Moreover, they were unable to state the leading incidents connected with their residence in this country, which fact, as is pointed out in the Lee Sim Case, just cited, would discredit their testimony, even if competent.

[6] The constitutionality and validity of the statute are no longer open to question, and, if sufficient ground for the detention of the alien is shown, he is not to be discharged upon habeas corpus for defects in the original arrest or commitment. Mr. Justice Gray in Nishimura Ekiu v. United States, 142 U. S. 651, 660, 12 Sup. Ct. 336, 338 (35 L. Ed. 146), in delivering the opinion of the court, has stated the law very distinctly:

"An alien immigrant, prevented from landing by any such officer claiming authority to do so under an act of Congress, and thereby restrained of his liberty, is doubtless entitled to a writ of habeas corpus to ascertain whether the restraint is lawful. Chew Heong v. United States, 112 U. S. 536 [5 Sup. Ct. 255, 28 L. Ed. 770]; United States v. Jung Ah Lung, 124 U. S. 621 [8 Sup. Ct. 663, 31 L. Ed. 591]; Wan Shing v. United States, 140 U. S. 424 [11 Sup. Ct. 729, 35 L. Ed. 503]; Lau Ow Bew, Petitioner, 141 U. S. 583 [12 Sup. Ct. 43, 35 L. Ed. 868]. And Congress may, if it sees fit, as in the statutes in question in United States v. Jung Ah Lung, just cited, authorize the courts to investigate and ascertain the facts on which the right to land depends. But, on the other hand, the final determination of those facts may be intrusted by Congress to executive officers; and in such a case, as in all others, in which a statute gives a discretionary power to an officer, to be exercised by him upon his own opinion of certain facts, he is made the sole and exclusive judge of the existence of those facts, and no other tribunal, unless expressly authorized by law to do so, is at liberty to re-examine or controvert the sufficiency of the evidence on which he acted. Martin v. Mott, 12 Wheat. 19, 31 [6 L. Ed. 537]; Philadelphia & Trenton Railroad v. Stimpson, 14 Pet. 448, 458 [10 L. Ed. 535]; Benson v. McMahon, 127 U. S. 457 [8 Sup. Ct. 1240, 32 L. Ed. 234]; In re Oteiza, 136 U. S. 330 [10 Sup. Ct. 1031, 34 L. Ed. 464]. It is not within the province of the judiciary to order that foreigners who have never been naturalized, nor acquired any domicile or residence within the United States, nor even been admitted into the country pursuant to law, shall be permitted to enter, in opposition to the constitutional and lawful measures of the legislative and executive branches of the national government. As to such persons, the decisions of executive or administrative officers, acting within powers expressly conferred by Congress, are due process of law. Murray v. Hoboken Co., 18 How. 272 [15 L. Ed. 372]; Hilton v. Merritt, 110 U. S. 97 [3 Sup. Ct. 548, 28 L. Ed. 83]."

This decision is now the law of the land, especially in view of the recent decisions to which reference has been made. Tested by these rulings, the conclusion is imperative that the petitioners have not presented any case for the courts, the decision of the executive officers being final.

The writs should be dismissed, and all petitioners remanded to the custody of the immigration officers. Let judgment to that effect be entered in each case.

In re LIPHART.

(District Court, E. D. Virginia. October 15, 1915.)

1. GIFTS ⟹53—GIFTS CAUSA MORTIS—ELEMENTS.
A gift causa mortis must be of personal property, must be made in the last illness of the donor, while under the apprehension of death as imminent, and subject to the implied condition that if the donor recover of the illness, or if the donee die first, the gift shall be void, and possession of the property must be delivered at the time to the donee, or some one for him, and the gift must be accepted by the donee.
[Ed. Note.—For other cases, see Gifts, Cent. Dig. § 104; Dec. Dig. ⟹53.]

2. GIFTS ⟹82—GIFTS CAUSA MORTIS—SUFFICIENCY OF EVIDENCE.
Each element of a gift causa mortis must be established by the most cogent proof, and such as to leave no doubt as to the character of the transaction.
[Ed. Note.—For other cases, see Gifts, Cent. Dig. §§ 154, 155; Dec. Dig. ⟹82.]

3. GIFTS ⟹82—GIFTS CAUSA MORTIS—SUFFICIENCY OF EVIDENCE.
Within the rule that the evidence, to establish a gift causa mortis, must be clear and convincing, evidence *held* insufficient to show that a bankrupt's wife, during her last illness, made a gift of her furniture and jewelry to her infant son.
[Ed. Note.—For other cases, see Gifts, Cent. Dig. §§ 154, 155; Dec. Dig. ⟹82.]

4. WILLS ⟹90—GIFTS CAUSA MORTIS—TESTAMENTARY LANGUAGE.
A bankrupt's wife, who died immediately following a surgical operation, told the bankrupt, before the operation, that her furniture and her jewelry was to go to her son, and that certain articles were to go to her mother and brothers, and a brother of the bankrupt. It appeared that her desires with regard to her mother and brothers and the bankrupt's brother had not been complied with, but that the bankrupt had listed the property for taxation in his own name, and stored it, or some of it, in his mother's name, though he was his son's duly qualified guardian, and that he had described the property as his in a lease. *Held*, that the facts did not show a gift, either to the son or the other alleged donees; the wife's language being at most of a testamentary character, which will not support a gift causa mortis.
[Ed. Note.—For other cases, see Wills, Cent. Dig. § 219; Dec. Dig. ⟹90.]

In the matter of C. M. Liphart, bankrupt. Upon the petition of C. M. Liphart, as natural guardian and next friend of C. G. Liphart, an infant son under the age of 14 years and a party to this proceeding, to review the referee's ruling as to the title to certain personal property. Ruling approved.

The opinion of Referee Thomas B. Snead was as follows:

The property which is the subject of this controversy consists of certain household effects which formerly belonged to the bankrupt's wife, the late Mrs. Eula Liphart, and it appears that just before her death, which occurred May 3, 1910, and immediately following a surgical operation which she had undergone, Mrs. Liphart, while in the operating room awaiting said operation, stated to her husband what disposition she desired made of this and other personal property, which had been given her by her relatives and friends, in the event that she should die. She requested that her jewelry and

furniture be given her son, that certain articles of silverware, which had been given her by her brothers, be returned to them, and that certain other articles be given to other relatives. It further appears that, for a number of years prior to her death, Mrs. Liphart had been in ill health, and that upon other occasions she had expressed the desire that her son should have her property at her death. She had previously expressed such a desire to her brother-in-law, R. P. Liphart, and had also stated to both the nurse and physician, who attended her in her last illness, and for some time before her death occurred, that she desired her son to have her property at her death, and it further appears that the statement made by Mrs. Liphart to her husband, as to what disposition she desired made of her property, was made in periculo mortis, and that she died shortly after said operation. At the time of Mrs. Liphart's death, the property in question was located upon premises No. 1617 Park avenue, where the bankrupt and his family then resided, and it appears to have remained in the bankrupt's possession and control ever since. Subsequent to bankruptcy, the bankrupt's trustee was approached by Mrs. Liphart's father and one of her brothers, who stated to the trustee that it was their desire to purchase the property which had belonged to Mrs. Liphart, for sentimental reasons. On September 29, 1913, this property was stored in the warehouse of W. Fred Richardson, Incorporated, partly in the name of the bankrupt, and partly in the name of his mother. It appears that the bankrupt intended to have all the property, claimed to be his son's, stored in his mother's (Mrs. C. E. Liphart's) name, and his own stored in his name; but, through some mistake upon the part of the warehouseman, the two lots became commingled, and some of each lot was stored in the bankrupt's name, and some in his mother's name. A full and complete list of the property claimed to belong to the bankrupt's son is set out in the petition filed by the bankrupt as guardian and next friend of his son, and each article and parcel thereof is referred to by number.

[1, 2] As I understand, the only question to be decided here is whether the evidence in this matter establishes a gift causa mortis, upon the part of the decedent, the bankrupt's wife, to her son, of the property which is the subject of this controversy, and I am of opinion that it does not establish such a gift. Commenting upon this method of disposing of personal property between donor and donee, the Court of Appeals of Virginia, in Johnson v. Colley, 101 Va. at page 416, 44 S. E. at page 722, 99 Am. St. Rep. 884, lays down the following as being the essential attributes of a gift causa mortis: "(1) It must be of personal property; (2) the gift must be made in the last illness of the donor, while under the apprehension of death as imminent, and subject to the implied condition that if the donor recover of the illness, or if the donee die first, the gift shall be void; and (3) possession of the property given must be delivered at the time of the gift to the donee, or to some one for him, and the gift must be accepted by the donee." Not only is this view in thorough accord with those expressed in a long line of decisions, both in this country and in England, but, wherever it has been attempted to establish a gift causa mortis, the courts have been inclined to scrutinize closely all of the attending circumstances and to allow such gifts only upon the clearest and most convincing proof. Thomas' Administrator v. Lewis et al., 89 Va. 1, 15 S. E. 389, 18 L. R. A. 170, 37 Am. St. Rep. 848; Miller v. Jeffress, 4 Grat. (Va.) 472; Yancy v. Field, 85 Va. 761, 8 S. E. 721; Spooner v. Hilbish, 92 Va. 341, 23 S. E. 751; Basket v. Hassell, 170 U. S. 602, 2 Sup. Ct. 415, 27 L. Ed. 500; Hitch v. Davis, 3 Md. Ch. 266; Waite v. Grubbe, 43 Or. 406, 72 Pac. 206, 99 Am. St. Rep. 764; Drew v. Hagerty, 81 Me. 231, 17 Atl. 63, 3 L. R. A. 230, 10 Am. St. Rep. 255; Cyc. Vol. 20, 1228; Jones' Adm'r v. Irvin, 4 Va. Law Reg. 526. Furthermore, not some, but all, of these elements must be present, and each must be established by the most cogent proof, and such as to leave no doubt as to the character of the transaction; for to require a less rigid rule of proof, as said in Miller v. Jeffress, 4 Grat. (Va.) 480, "would introduce in such cases all the mischiefs of fraud, perjury, and surprise, which the law seeks, as far as practicable, to guard against."

[3, 4] I am of the opinion that the requirements of the law have not been met in this case. The evidence depended upon to establish a gift causa

mortis is neither clear and convincing, nor such as to leave no doubt as to the character of the transaction. The bankrupt, at pages 72, 73, of his deposition, upon being asked what his wife said about what disposition she desired made of her property, testified as follows: "She made frequent requests of me what she wanted done with her property and personal things. Her last request was when she was taken to the hospital, a short while before she was operated upon, when the nurse and doctor and myself were together. She asked the nurse and doctor to go out of the room into the antiseptic room there, as she wanted to have a talk with me; and in her talk with me she told me she had been sick a long while, and that she knew I was worried about the enormous expense, and she wanted to help me, and I told her I was able to stand the expense better than I ever was; that if I needed any help, and she could help me, she would be the first that I would go to. So she told me that she had everything to live for and nothing to die for, and if it was God's will for her to die it was all right with her. And she told me what she wanted me to do with the various things she had which were given to her, some by her mother and by her father, and my mother and my father, her brothers and her friends, and gave me detailed information what I should do, should she die, and asked me whether I would carry out her wishes. I promised her I would, and I have to the best of my knowledge and belief. Her furniture, her jewelry, was to go to her son. I was to keep a home for him, educate him, and bring him up to be a good man. Certain silverware articles, which one of her brothers had given to her, were to be returned to him. Her personal apparel was to go to her mother, to be distributed as she saw fit and best. Certain articles which my brother had given to her were to be returned to my brother, and various other little requests which I cannot just think of; but they were all complied with promptly by me. I kept a home for my son as long as I was able to, up until I think the last of October. I stored this furniture with permission of Eppes & Eppes in Richardson's Storage Warehouse, after consulting with them first in regard to the matter, and they wrote me, and I replied. That was the last request Mrs. Liphart made of me, as she was practically unconscious from that time until she died. This request she had made to various other people, not in the way she told me, but that what she had was to go to my boy and her son."

While it is true that the bankrupt's statement is in a way corroborated by the testimony of the physician and nurse, who attended Mrs. Liphart in her last illness, as well as by that of the bankrupt's brother, R. P. Liphart, all three of whom stated, in substance, that they had heard Mrs. Liphart express the desire that her property should go to her son upon her death, viewing the statements, purported to have been made by Mrs. Liphart, in the light of the language used by the court in the case of Miller v. Jeffress, supra, it is clear to my mind that the same are merely testamentary; and mere testamentary declarations upon the part of the donor, unaccompanied by delivery of the property, will not sustain a gift causa mortis. There must be a delivery of the property to the donee, or some one for him, at the time of the gift, and the title, though a defeasible one, must vest as of the time of the gift; otherwise the donor's declarations will be considered as testamentary only. Thomas' Administrator v. Lewis et al., 89 Va. 1, 15 S. E. 389, 18 L. R. A. 170, 37 Am. St. Rep. 848.

The evidence under consideration in Miller v. Jeffress was as follows:

"We, the undersigned, do hereby certify that Paschal Fowlkes, during his illness of body, but of a sound mind, said that he wished his nephew L. Fowlkes to have two thousand dollars out of his estate, and that his friend Edward T. Jeffress should have all the bonds of his in his possession. As witness and given under our hands and seals, this 20th day of December 1828.

"[Signed] Ephraim Waller. [Seal.]
"George M. Fuqua. [Seal.]
"John X Overstreet. [Seal.]"
his mark

And, commenting upon the same, the court said, among other things: "The facts as set out in the certificate, and I may add as proved by the witnesses,

satisfy me that the decedent had no idea at the time of parting with all dominion over the subject. When a man in his last illness attempts to dispose of his property, it is prima facie a testamentary act, unless the contrary be clearly shown. So far from that being the case here, the words themselves import a future benefit. 'That his friend Edward T. Jeffress should have all the bonds of his in his possession' imply, not a present donation, but a future enjoyment. The words were also used in connection with other words and declarations uttered and made about the same time, and all of which look to dispositions to take effect at the death of the testator by way of last will and testament. There is nothing whatever to distinguish this from the other attempted bequests, except that, in describing the thing attempted to be bequeathed in this instance, it was referred to as being in the possession of the intended legatee."

So it must be said of the language Mrs. Liphart is purported to have used upon the occasion of her last illness. It shows that she was undertaking to dispose of her property to several persons, that certainly some of the bequests were not to take effect until after her death, and that none of the intended gifts were accompanied by a delivery of the property which she was seeking to dispose of. In fact, as far as I can see, nothing can be gathered, from the language Mrs. Liphart is purported to have used, which would distinguish the gift to her son from those she intended to make to her other relatives, except that the articles were different in character.

In addition to the fact that the language, purported to have been used by Mrs. Liphart, is not sufficiently clear to establish a gift causa mortis, the surrounding circumstances would appear to absolutely negative any such idea. Although the bankrupt states that it was his wife's desire that her mother and brothers and his brother should be the recipients of certain articles which they had given her as presents, there is no evidence to the effect that the bankrupt ever complied with any such request, except his own naked statement, "I promised her I would, and I have to the best of my knowledge and belief;" whereas, on the contrary, there is considerable evidence tending to show that he never did any such thing. Mrs. Liphart's father, J. H. Valentine, when called to testify in regard to this matter, stated, in substance, that while, whenever he gave his daughter anything, he tried to impress upon her that he desired his grandchild to have such things at her death, he never heard her say what disposition she desired made of her property, and not only was Mr. Valentine unable to relate any conversation which had occurred between his daughter and himself concerning a disposition of her property, but it affirmatively appears that, subsequent to the intervening of bankruptcy, he and one of his sons approached the trustee with a view to buying the very things they had given his daughter, "for sentimental reasons," as they stated, showing that they had no idea that Mrs. Liphart had undertaken to make any such disposition of her personal effects as it is here sought to establish was her intention. And these are not the only countervailing circumstances which appear in this matter. It also appears that the bankrupt stated, in the lease upon the premises he occupied just prior to this bankruptcy, that this was his property, and that subsequent to his wife's death he listed the same for taxation in his own name, and stored it, or some of it, in his mother's name, when, as he states, he was the duly qualified guardian of his son. And such circumstances as these, instead of tending, as they should, to strengthen the bankrupt's statement as to what disposition his wife intended to make of her property, have just the opposite effect.

To recapitulate, as I understand the law, such a gift must be complete within itself; that is to say, the donor must, in her lifetime, and in anticipation of death, have actually made a gift of the property to the donee, to be defeated only in event of the death of the donee, or of the survival of the donor of the particular illness. And the language used, in respect to none of the gifts under consideration, was such as would constitute a good gift causa mortis. No such words as Mrs. Liphart is reputed to have used, whether as respects the alleged gift to her son, or to the other members of her family, indicating merely how she desired her husband to dispose of her estate after her death, will suffice. Such language was, at best, of a testa-

mentary character only, and but an oral declaration of the disposition she desired should be made of her property after her death.

George A. Hanson, of Richmond, Va., for guardian and next friend.
Haw & Haw, of Richmond, Va., for trustee.

WADDILL, District Judge. The ruling of the referee as set forth in the foregoing is approved, and his opinion is adopted as that of the court.

Let order be entered accordingly.

CLOSSER et al. v. STRAWN.

(District Court, W. D. Pennsylvania. September 1, 1915.)

No. 27.

1. ASSIGNMENTS FOR BENEFIT OF CREDITORS ⟹184—RIGHTS AND REMEDIES OF ASSIGNEE.

In the absence of a statute conferring greater powers, an assignee for the benefit of creditors succeeds to the rights of his assignor only, and not to the rights or remedies of creditors.

[Ed. Note.—For other cases, see Assignments for Benefit of Creditors, Cent. Dig. §§ 555–571; Dec. Dig. ⟹184.]

2. BANKRUPTCY ⟹9—STATE INSOLVENCY LAWS—SUSPENSION BY BANKRUPTCY ACT.

Act Pa. June 4, 1901 (P. L. 404), which is in the nature of a bankruptcy act, is suspended, and no authority can be derived from its provisions, so long as the national Bankruptcy Act is in force.

[Ed. Note.—For other cases, see Bankruptcy, Cent. Dig. §§ 7–9; Dec. Dig. ⟹9.]

3. BANKRUPTCY ⟹9—STATE INSOLVENCY LAWS—EFFECT OF BANKRUPTCY ACT.

Congress having legislated upon the subject of insolvency proceedings by the passage of Bankr. Act July 1, 1898, c. 541, 30 Stat. 544, and its amendments, no additional bankruptcy or insolvency act can be enforced in any of the states, and no person excepted from the operation of the Bankruptcy Act can be subjected to, or have the benefit of, any state bankruptcy law.

[Ed. Note.—For other cases, see Bankruptcy, Cent. Dig. §§ 7–9; Dec. Dig. ⟹9.]

4. REMOVAL OF CAUSES ⟹11—JURISDICTION OF FEDERAL COURT—CREDITORS' SUIT.

The rule of the federal courts that a bill in equity to set aside a fraudulent conveyance can only be maintained by judgment creditors may be waived by the defendant, and when waived cannot be invoked by the plaintiff to defeat jurisdiction on removal.

[Ed. Note.—For other cases, see Removal of Causes, Cent. Dig. §§ 29–31; Dec. Dig. ⟹11.]

5. FRAUDULENT CONVEYANCES ⟹237—JURISDICTION OF EQUITY—SUIT TO ENFORCE TRUST.

A suit by assignees for the benefit of creditors, on behalf of the creditors, brought under authority of a state statute, to set aside a fraudulent conveyance, is one brought in the enforcement of a trust, of which equity has jurisdiction.

[Ed. Note.—For other cases, see Fraudulent Conveyances, Cent. Dig. §§ 674–680, 684–686; Dec. Dig. ⟹237.]

In Equity. Suit by James W. Closser and Corbley K. Spragg, assignees for the benefit of creditors of James L. Iams, against John H. Strawn, trustee. On motion by defendant to dismiss bill, and motion by plaintiffs to remand to state court. Motion to remand denied, and motion to dismiss sustained.

John C. Bane, of Pittsburgh, Pa., Jas. J. Purman, of Waynesburg, Pa., and Wiley & Marriner, of Washington, Pa., for plaintiffs.

John S. Wendt, of Pittsburgh, Pa., P. D. Rinehart, of Waynesburg, Pa., and Jas. I. Brownson, of Washington, Pa., for defendant.

ORR, District Judge. This is a suit in equity, which was removed from the court of common pleas of Greene county, in the state of Pennsylvania. It is before the court upon a motion on the part of the defendant to dismiss the bill, and also upon a motion on the part of the plaintiffs to remand the suit to the court in which it was originally brought. The averments of the bill, so far as they are material to the consideration of the questions now before the court, are substantially as follows:

On the 1st of April, 1912, pursuant to the act of assembly of the commonwealth of Pennsylvania approved June 4, 1901 (P. L. 404–424), James L. Iams, of Morris township, Greene county, Pa., a person engaged chiefly in farming or the tillage of the soil, and Belle S. Iams, his wife, made a deed of assignment to the plaintiffs of all the property of the said Iams, for the benefit of the latter's creditors, which deed was duly delivered and recorded. The plaintiffs accepted the trust created by said deed, and have in all respects performed their duties as such assignees according to the provisions of said act.

The creditors of Iams confirmed and approved the appointment of the plaintiffs as such assignees, and waived their right to select additional assignees, and thereby duly constituted and appointed the plaintiffs as their representatives, by force and virtue of which, and of the said deed, and of the said act of assembly, the plaintiffs became the representatives of such creditors, and became entitled by proper steps in their own names as assignees to have vacated and set aside for the benefit of such creditors any lien, conveyance, or incumbrance which could have been avoided by any of the creditors; and by virtue, also, of the same the plaintiffs became vested with all the property of the said Iams which might have been liable for the payment of any of his debts.

Before March 1, 1910, the aggregate of the property of the said Iams, at a fair valuation, was not sufficient to pay his debts, and on and since that date the aggregate of the property of the said Iams, inclusive of any property which he might have conveyed, transferred, concealed, or removed with intent to defraud, hinder, or delay his creditors, including his undivided interest in the lands described in the mortgage hereinafter referred to, at a fair valuation, has not been sufficient to pay his debts, and before and since that date said Iams was, has been, and still is insolvent within the true intent and meaning of said act of assembly, and during all of said period the said defend-

ant and those he represents had knowledge and notice of such insolvency.

As of March 1, 1910, the defendant in his capacity as receiver of the Farmers' & Drovers' National Bank of Waynesburg, Pa., and upwards of 60 national banking associations, trust companies, and other banks and banking associations of Pennsylvania, Ohio, Maryland, West Virginia, and Virginia, together with other persons named therein, with full knowledge and notice of the insolvency of said Iams, entered into a contract in writing, as parties of the first part, with said Iams, George F. Auld, and J. F. Tilton, as parties of the second part, whereby it was agreed that the defendant be appointed trustee for the parties of the first part in said contract, and be authorized and empowered to take and receive in his name as trustee the evidences of indebtedness therein provided for, and to collect the same and distribute the proceeds among the parties entitled thereto, according to the terms of the agreement, and that said Iams and said Auld, without stipulating the amount for which either of them was supposed to be liable, should deliver to the defendant, in his capacity as trustee, a certain mortgage dated April 1, 1910, conveying coal and mineral rights for the sum of $126,500. Pursuant to said contract the said Iams and the said Auld executed and delivered to the defendant such mortgage, which was duly recorded in the proper office for the recording of deeds and mortgages.

Said contract of March 1, 1910, stipulated that the said Tilton should pay to the said defendant certain money in cash and execute and deliver a mortgage for $3,500. The said contract of March 1, 1910, further provided that for its purpose all the several obligations listed in an exhibit attached thereto should be treated as valid obligations, without the necessity of further proof to establish the same, and that the distribution of moneys to be recovered in pursuance of said agreement and the said mortgage should be based upon the face value thereof as the same stood at the time of the closing of the Farmers' & Drovers' National Bank on the 12th day of December, 1906.

The contract contains certain provisions for the release of the second parties from liability for all claims held by the other party, contains certain stipulations with respect to the application of the moneys to be received by the said receiver of the bank, such as the payment of certain judgments, etc., and, further, that its execution and delivery should not be taken as an admission of liability of any of the second parties as maker, or indorser, or otherwise, of any of the particular items listed in the exhibit attached to the contract. Said contract further provided that all the provisions should be inoperative, null, and void, at the option of the said John H. Strawn, if there were bankruptcy proceedings instituted against any of the second parties, and, further, that it should be binding and effectual as between the parties only when it should be approved by the Comptroller of the Currency of the United States, and an order be made by a court of competent jurisdiction authorizing its execution and delivery. Such order was not made by such court until January 23, 1911.

The agreement of March 1, 1910, further provided that the amounts which would have been distributed to parties entitled to execute said

agreement, but refusing to do so, should be paid and distributed to the second parties as their interests should appear, and that thereafter the rights of the nonassenting parties should remain as theretofore, unaffected by the agreement. Some of the parties refused to sign, and by reason of such refusal the plaintiff charges that the defendant became trustee in said mortgage for the said Iams, Auld, and Tilton. There is a further stipulation in the agreement that the mortgages to be given by the second parties should impose no personal liability, thereby relieving Tilton, in consideration of his paying a comparatively small sum, of and from all personal liability for and on account of the principal consideration of the contract which was very large.

The plaintiffs charge that there has been no accounting or settlement between the trustee in said mortgage and the mortgagors, or either of them, for the purpose of ascertaining their separate or individual liability, and that such separate indebtedness or liability has never been ascertained. They further charge that a large number of the judgments listed in the schedule attached to said agreement were not entered or obtained against said Iams, and that he never was liable therefor, nor bound thereby, and that some of said judgments were recovered upon forged paper.

The plaintiffs further charge in the bill that the said defendant and the said Iams well knew that said judgments were obtained upon forged paper, and that the said Iams was in no respect liable therefor or bound thereby, and they further charge that a large majority of the claims in the exhibit attached to the said contract never were just and valid claims against Iams, and do not purport to be, and that they are based upon false, fraudulent, and forged paper, all of which was well known to the said defendant and to the said Iams, and, further, that a large number of the claims inserted in said agreement had been paid and extinguished, or partially so, prior to the time when said mortgage became effective, and that the said defendant and the said Iams had knowledge thereof.

The plaintiffs further charge that the proposed intent and effect of the said agreement and of the mortgage were to divert the assets of Iams, to the value of upwards of $100,000, from his creditors existing at the time of making said agreement and mortgage, to persons to whom said Iams was not indebted, and also to blend and intermingle the claims of the parties of the first part to said contract against the said Iams, Auld, and Tilton into a common pool and apply thereto the proceeds of said mortgage when collected.

Plaintiffs further charge that the true consideration of said mortgage was concealed from the creditors of said Iams, and that the contract of March 1, 1910, was not referred to in said mortgage, and that knowledge and notice of the contents of said contract were withheld and concealed from the creditors of said Iams, for the purpose of hindering, delaying, and defrauding them in the enforcement and collection of their claims against the said Iams and the lands and interest in coal covered by the mortgage.

The bill of the plaintiffs further recites certain proceedings instituted in the county of Washington on the said mortgage by scire facias, wherein judgment was obtained in the sum of $148,950.62, with inter-

est from May 26, 1914, which judgment was affirmed by the Supreme Court of Pennsylvania on January 2, 1915, and in which proceedings it was held that the plaintiffs in this bill had no standing in that court to make or set up as a defense thereto any of the matters set forth at length in the present bill. The bill further charges that the said defendant has caused a writ of levari facias to be issued upon said judgment, by virtue of which the mortgaged premises have been advertised for sale by the sheriff of said county.

The plaintiffs further insisting that by virtue of the said act of assembly of Pennsylvania, and by virtue of the proceedings thereunder which are pending at No. 1 of June term, 1912, in the common pleas court of Greene county, Pa., they are authorized and empowered to set aside and have vacated for the benefit of all the creditors of said Iams the said mortgage, judgment, and other proceedings thereon, and averring that they are in possession of the property of said Iams, and have been from the date of the deed of assignment, and averring that they are unable to sell said lands at a fair and adequate price by reason of the cloud and incumbrance of said mortgage upon the title thereto, they pray for relief in various forms—principally to have the mortgage and judgment and lien thereof vacated and set aside and to have an accounting from the said defendant.

On Motion to Dismiss.

The reasons in support of the motion to dismiss may be briefly summarized as follows:

That the plaintiffs by their bill show no title or right to maintain such a bill, otherwise than by virtue of the act of assembly of the state of Pennsylvania approved June 4, 1901 (P. L. 404).

That such act of assembly is an insolvency law, amounting to, and in substance and effect being, a state bankruptcy statute, and as such is suspended and rendered inoperative under and by virtue of the Constitution and laws of the United States, while the bankruptcy law passed by Congress on July 1, 1898, as subsequently amended, is in full force and effect.

That so much of said act of Pennsylvania as purports to grant to the plaintiffs or invest them with the right and power to proceed by proper legal steps in their own names as assignees for the benefit of creditors of their assignor, to have vacated and set aside for the benefit of all the creditors of their assignor any judgment, execution, conveyance, or incumbrance, etc., which could have been avoided by the creditors of said assignor, or any of them, was on the date of the filing of said bill, and now is, suspended and inoperative by reason and in consequence of the enactment of the aforesaid act of Congress approved July 1, 1898.

The plaintiffs by said bill show no lawful title and right in themselves to maintain the suit, or to obtain the relief for which they pray.

[1] It is plain under the authority of Strawn, Trustee, v. Iams, 247 Pa. 132, 93 Atl. 174, which was the appeal from the proceeding in Washington county for the foreclosure of the mortgage, recited in the bill, that the plaintiffs, unless the right is vested in them under the

state insolvency act of June 4, 1901 (P. L. 404), have no right to maintain this bill. The following language from the opinion of the Supreme Court in that case clearly and correctly states the law:

"Leaving that act out of consideration, such assignee succeeds to the rights of his assignor, and none others. In the language of Gibson, C. J., in Vandyke v. Christ, 7 Watts & S. [Pa.] 373: 'He is the debtor's instrument for distribution, and stands in relation to the property as stood the debtor himself, except that it cannot be seized in his hands on a creditor's execution. It has been transferred to him, as it would have been transferred to the debtor's right hand, had it pleased him to exercise his common-law right of preference, by payment in person. As he stands in no privity to the creditors, he cannot arrogate to himself any of their attributes and rights.' It was ruled in Bullitt v. Methodist Episcopal Church, 26 Pa. 108, that such assignee so purely represents the debtor that he cannot even avoid a prior assignment which would be void against creditors, and that, such being the character and the rights of a voluntary assignee, he is bound by the judgments rendered against the debtor before his trust began; that neither a judgment nor mortgage creditor can intervene, either to set aside a judgment or prevent its revival, except for fraud, and then it is done not by defending in the shoes of the assignee, but by a collateral proceeding in his own behalf. * * * 'The assignee is but a volunteer, who takes subject to the judgment against the debtor, who has no estate of his own to protect as a purchaser, and who leaves the creditor interested in the assignment, in this as in all other cases, to the protection of that self-interest in their debtor which prompts every man to defend himself against false claims.' Fulton's Estate, 51 Pa. 204. With his rights and powers circumscribed at common law as we have indicated, clearly the assignee in this case would have no standing to contest the plaintiff's right to judgment in the scire facias upon the debtor's mortgage, except it was conferred by statute."

In passing, it is well to note that the court considers the extent to which the powers of an assignee are enlarged by the statute, with special reference to the seventeenth section thereof, and determines that the assignees in the case before them were not entitled to defend in the foreclosure proceeding, because the act did not confer upon the assignees rights in relation to the property incumbered or transferred more than four months before the assignment, which creditors did not enjoy prior to the act, but empowered the assignees to enforce in their own names the rights which prior to the act were enforceable only by the creditors.

[2] It is significant that the Supreme Court of its own motion suggests a more serious question than any which had been argued before them in the case, in the following language:

"The case suggests the more serious question, whether the act of June 4, 1901 (P. L. 404), is not inoperative, so long as the federal bankruptcy statute (Act July 1, 1898, c. 541, 30 Stat. 544) is in force; but this question was not raised in the court below, nor was it argued on the appeal. We have assumed, for the purpose of this case only, that the act is operative."

The question thus stated to be so serious in that litigation is now before this court. Turning to the Pennsylvania statute, we find its title to be as follows:

"An act relating to insolvency; embracing, among other matters, voluntary assignments for the benefit of creditors, and adverse proceedings in insolvency by creditors; forbidding, also, certain preferences; providing for the distribution of the insolvent's estate, and in certain contingencies relieving him, and others liable with him, from further liability for his or their debts."

The very title of the act indicates that it is an act in the nature of a bankruptcy act. Section 1 provides that:

"If any person, persons, firm, limited partnership, joint stock company or corporation, being insolvent or in contemplation of insolvency, with a view to give a preference to any creditor or person having a claim against, or who is under any liability for, such insolvent, shall procure, suffer or permit any judgment to be entered, by confession or otherwise, or any execution to be levied, or any attachment, or sequestration to be made of any part of his, their or its real or personal property, or shall make any payment, pledge, assignment, transfer, conveyance or incumbrance thereof, either absolutely or as collateral security for a debt then existing, whether due or not, such judgment, execution, attachment, sequestration, payment, pledge, assignment, transfer, conveyance, or incumbrance shall inure to the benefit of all the creditors of such insolvent, if an assignment for the benefit of creditors be made or proceedings in insolvency be commenced within four months after," etc.

Passing by certain provisions of the act relating to voluntary assignments, we find provisions for proceedings on the part of creditors of an alleged insolvent to have such insolvent so adjudged upon grounds specifically set forth in the act. There is provision in the act for delivery by the insolvent of all his assets to the receiver, or to such assignee or additional assignee as may be selected by the creditors at a meeting required to be called for that purpose. There is provision in the act for the discharge of the insolvent from liability to those creditors making claim to their share in the assets, except with respect to claims arising in certain cases, such as fraud, embezzlement, and for false oaths in reference to the settlement of the estate, etc. It is plain that it is in the nature of a bankruptcy act. This is the view taken by the Superior Court of Pennsylvania in Potts v. Smith Mfg. Co., 25 Pa. Super. Ct. 206.

The seventeenth section of the act, upon which the plaintiffs in this case rely, so far as is necessary to be set forth, is as follows:

"Sec. 17. An assignee or receiver for the benefit of creditors shall be under the control of the proper court of common pleas, shall be the representative of the creditors of the insolvent, and entitled by proper legal steps, in his own name as assignee or receiver, to have vacated and set aside for the benefit of all the creditors any judgment, execution, attachment, sequestration, payment, pledge, assignment, transfer, conveyance or incumbrance which heretofore could have been avoided by the creditors, or any of them, or by which it is attempted to give one creditor preference over another, or which by this act inures to the benefit of all the creditors of such insolvent."

It is plain, therefore, that that section is an enlargement of the powers of assignees for the benefit of creditors. It follows that such enlargement is for the purpose of enabling the accomplishment of the general purposes of the act. It is a material part of the act, and should not be considered as an enlargement of the common-law rights of assignees for the benefit of creditors, irrespective of the act of which it is such material part. In Potts v. Smith Mfg. Co. supra, the court held that:

"The Pennsylvania act of June 4, 1901, relating to insolvency is suspended by reason of the existence of the federal Bankruptcy Act of July 1, 1898, and does not become operative as to the persons and subjects to which the federal act applies."

The reasoning in support of that decision is sound. It rests upon the proposition that, where the Constitution of the United States leaves in the states and in Congress concurrent power over a particular subject, and Congress has exercised its power over such subject, the control of the states over that subject is prohibited.

It is unfortunate that the same court, in later cases, as for instance, Miller v. Jackson, 34 Pa. Super. Ct. 31, has held that the Pennsylvania insolvency act of June 4, 1901 (P. L. 404), is not suspended by the federal Bankruptcy Act as to farmers. No consideration at length seems to have been given the question, but the decision seems to have been reached because the act of Congress, while affording wage-earners and farmers the opportunity of having the benefit thereof, has expressly excepted them from among those who may be compelled to comply with its provisions.

In the view we take of the question, we are bound to hold that, while the bankruptcy law of the United States is in force, the act of 1901 of Pennsylvania is suspended, and that no farmer who declines to avail himself of the provisions of the Bankruptcy Act can avail himself of the insolvency act of Pennsylvania, or be subjected to the requirements of that act.

[3] It will be noticed that the Pennsylvania act was not passed until three years after the bankruptcy law of the United States went into effect. So far as wage-earners and tillers of the soil may be affected by the provisions of the bankruptcy law, the passage of the insolvency act of Pennsylvania, which by its language would include such persons, would indicate on its face a dissatisfaction by the state of Pennsylvania with the act of Congress and a purpose and attempt to extend the act to others who might be excepted from involuntary proceedings under the act of Congress. Such, however, is merely the superficial glance, which, of course, should not control.

By the Constitution of the United States (article 1, § 8) the power was granted to Congress "to establish * * * uniform laws on the subject of bankruptcies throughout the United States." That the bankruptcy law of 1898 is constitutional is without doubt at this late date. Congress, therefore, having passed the bankruptcy law of July 1, 1898, entitled "An act to establish a uniform system of bankruptcy throughout the United States," and having excepted from its operation certain persons from those who may be adjudged bankrupts under said act, and yet granted to the same persons the privilege of becoming voluntary bankrupts under said act, should be deemed to have intended that no person who could not be adjudged an involuntary bankrupt under the bankruptcy law could be adjudged an involuntary bankrupt under any state law on the subject, and that persons who had the privilege of becoming voluntary bankrupts under the bankruptcy law could not ignore the privileges of that law and become voluntary bankrupts or insolvents under any state law. The controlling principle is expressed in this language of the Supreme Court of the United States, quoted from time to time and last found in Southern Railroad Company v. Railroad Commission of Indiana, 236 U. S. 439, 446, 35 Sup. Ct. 304, 305 (59 L. Ed. 661):

"If Congress have a constitutional power to regulate a particular subject, and they do actually regulate it in a given manner and in a certain form, it cannot be that the state Legislatures have a right to interfere, and, as it were, by way of complement to the legislation of Congress, to prescribe additional regulations, and what they may deem auxiliary provisions for the same purpose. In such a case, the legislation of Congress, in what it does prescribe, manifestly indicates that it does not intend that there shall be any further legislation to act upon the subject-matter. Its silence as to what it does not do is as expressive of what its intention is as the direct provisions made by it. * * * The will of Congress upon the whole subject is as clearly established by what it had not declared as by what it has expressed."

It seems to be clear that the will of Congress, as expressed in the Bankruptcy Act and its various supplements, is that no other or additional bankruptcy act should be enforced in any of the states, and that no persons excepted from the operation of the bankruptcy law of the United States should be subjected to, or have the benefit of, any other bankruptcy law passed by any of the states. It is unnecessary to consider the cases in which this proposition has been considered to any extent. The insolvency act of Pennsylvania of 1901 is suspended, because the bankruptcy law of Congress and its supplements are in full force. Because the state insolvency law is not in force, the plaintiffs in this case have derived no authority by reason of any of the provisions of that law, and there was not extended to them by that law, or by the proceedings in court pursuant to that law, any other or greater powers than would exist in them under a deed of voluntary assignment at common law.

From the foregoing considerations, it is plain that the bill shows no lawful title or right in the plaintiffs to maintain the suit or obtain the relief for which they pray. Their bill, therefore, must be dismissed, unless the motion to remand prevail.

On Motion to Remand.

[4] The reason in support of this motion is stated therein to be:

"That the said District Court sitting in equity has no jurisdiction in the action, neither of the subject-matter thereof, nor of the parties thereto, or any of them."

It plainly appears from the record that there is diversity of citizenship between the parties, and that the amount involved exceeds the jurisdictional limit fixed by the act of Congress. The argument on the part of the plaintiffs on the question of the jurisdiction of the court was in substance as follows:

The Constitution of the United States distinguishes between and separates law and equity, so that legal and equitable remedies must be separately pursued. Hence a state statute providing a remedy in equity, where previously the remedy was at law, does not enlarge the equitable jurisdiction of the federal courts, and accordingly, notwithstanding the fact that under the state act of 1901 the plaintiffs could maintain the present bill in the state court, such bill cannot be entertained by this court, for the reason that, under the rules of equity which govern this court, a bill in equity to set aside a fraudulent

conveyance cannot be maintained for the benefit of creditors who are not judgment creditors.

To support the argument on the part of the plaintiffs, the cases of Scott v. Neely, 140 U. S. 106, 11 Sup. Ct. 712, 35 L. Ed. 358, and Cates v. Allen, 149 U. S. 451, 13 Sup. Ct. 883, 37 L. Ed. 804, are cited. In each of those cases the debtor interposed the defense that his creditor, who was the plaintiff, had not exhausted the legal remedies, and that to fix upon him a liability and the amount thereof would be in contravention of the fundamental provision of the Constitution, and impair his right of trial by jury. In the case at bar the plaintiffs, who are the creditors, raise the question of jurisdiction to hear and determine their claims, although they have, by instituting their proceeding in the state court, attempted to enforce their claims without regard to their right of trial by jury.

The inconsistency of their position is apparent, and the weight of their argument in support of the present motion is diminished accordingly, if there should be weight given to it at all. The defendant has not raised the question in this case. On the contrary, by the exclusion of the question from his motions to dismiss, which go to the merits of the bill, he has waived a right to insist that the creditors whom the plaintiffs represent should reduce their claims to judgment. Not only that, but defendant has admitted in the brief filed on his behalf, and by the argument of his counsel in court, that this court has jurisdiction of the controversy between the parties, although insisting that the plaintiffs upon their own showing could not maintain their bill. That the defense in an equity suit that the complainant has not exhausted his remedy at law, or is not a judgment creditor, may be waived by the defendant, and that, when waived, the case stands as though the objection never existed, is clear under the authorities, of which it is necessary to recite only Re Metropolitan Railway Receivership, 208 U. S. 90, 28 Sup. Ct. 219, 52 L. Ed. 403.

[5] That this court has jurisdiction seems plain on other grounds. The title to the property was conveyed to the plaintiffs by a deed of assignment in trust for the benefit of the creditors of Iams. By that deed a trust was created in favor of the creditors which appears to be enforceable in equity, and if there be such trust in favor of a creditor jurisdiction of the bill should be retained, regardless of the fact as to whether or not the plaintiffs had recovered a judgment at law. See Case v. Beauregard, 101 U. S. 688, 25 L. Ed. 1004.

Again, as appears, the plaintiffs are seeking to enforce a new right of action vested in them by the seventeenth section of the insolvency law of Pennsylvania above recited, and it seems clear that such new right, if any there be, conferred by the state, should be enforced in this court, where there is the requisite diversity of citizenship and the proper amount involved. See Cowley v. Northern Pacific Railroad Co., 159 U. S. 569, 16 Sup. Ct. 127, 40 L. Ed. 263. It may be noted, too, that the right of action to set aside fraudulent conveyances which was intended to be given to assignees by the insolvency act of Pennsylvania is almost identical with the right of action for the same pur-

pose which the Bankruptcy Act of the United States gives to a trustee in bankruptcy. In the case of the latter it is well settled that he may proceed for such purpose by bill in equity and will not be required to seek his remedy at law. Such suit may be maintained, although neither the trustee nor any creditor has reduced the claim against the bankrupt to judgment. Collier on Bankruptcy (10th Ed.) 1042f.

We are of opinion that this court has full jurisdiction to entertain this bill and to dispose of it upon its merits. The motion to remand must be overruled. The motion to remand having been overruled, and being of the opinion that the motion to dismiss should prevail, it is ordered that the same be and is hereby sustained, and the bill dismissed.

Let a decree be drawn.

THE SANTA MARIA.

THE JOHN E. MEHRER.

(District Court, D. Delaware. June 29, 1915.)

Nos. 728, 828.

1. COLLISION ⟹95—MEETING TOWS—FAULTS OF TUGS.

A collision occurred at night on the Delaware river at a point where it bends to the eastward between the steamship Santa Maria and the barge Hampshire. The Santa Maria was going down the river in tow of the tug John E. Mehrer and having two other tugs alongside, being herself without steam, and the barge Hampshire was proceeding up the river in tow of the tug Sweepstakes, that barge and two others being towed tandem. When the tugs were within a quarter of a mile of each other, the Sweepstakes, which was on the western side of the channel, because of the bend and her long tow, signaled to pass port to port, which was agreed to by the Mehrer, although she was about the middle of the channel. Both tugs ported and passed in safety, but the starboard bows of the two following vessels came into collision. *Held*, that the Sweepstakes was primarily in fault for not signaling sooner or passing starboard to starboard, and also for not reducing speed, and that the Mehrer was in fault for assenting to the signal at the time it was given. All the other vessels *held* free from fault.

[Ed. Note.—For other cases, see Collision, Cent. Dig. §§ 200-202; Dec. Dig. ⟹95.]

2. COLLISION ⟹91—INLAND RULES—NARROW CHANNELS.

The requirement of article 25 of the Inland Rules (Act June 7, 1897, c. 4, § 1, 30 Stat. 101 [Comp. St. 1913, § 7899]) that in narrow channels steam vessels shall keep to the right or starboard side of the fairway is not absolute, but expressly applies only when that course is "safe and practicable," and is subject to the "special circumstances" provision of article 27 (Comp. St. 1913, § 7901).

[Ed. Note.—For other cases, see Collision, Cent. Dig. §§ 187-192; Dec. Dig. ⟹91.]

In Admiralty. Suits for collision by the Davis Coal & Coke Company, owner of the barge Hampshire, against the steamship Santa Maria, the tugs John E. Mehrer, Brandywine, and Bristol, with the tug Sweepstakes impleaded, and against William J. Grandfield and

---

others, owners of the Mehrer. Decree for libelant against the Sweepstakes and the Mehrer and its owners.

J. Frank Staley, of Philadelphia, Pa., for libelant.
Henry R. Edmunds, of Philadelphia, Pa., for Wm. J. Grandfield and others.
Howard H. Yocum, of Philadelphia, Pa., for the Santa Maria.
Howard M. Long, of Philadelphia, Pa., for the Bristol.
Edward F. Pugh, of Philadelphia, Pa., for the Brandywine.
John F. Lewis, of Philadelphia, Pa., for the Sweepstakes.

BRADFORD, District Judge. The controversy in this case grows out of a collision between the barge Hampshire and the steamship Santa Maria, which occurred in the main ship channel of the Delaware River in the vicinity of Grubbs Landing about 3 o'clock in the morning of September 6, 1906. The evidence is conflicting as to the precise point of the collision, it being stated by some of the witnesses that it was a short distance above, and by others a short distance below, the red light at Grubbs Landing. But it appears from the testimony that it was approximately opposite that light, whether slightly above or slightly below; and whether it was just above or just below, in the view I take of the case, is unimportant. It was in the bend of the channel where the Schooner Ledge Range and the Bellevue Range meet, and approximately in the middle of the channel—possibly a little to the eastward—and between the red light at Grubbs Landing and the red buoy in the easterly half of the channel; a straight line drawn from the red light to the red buoy passing a slight distance above an anchored dredge in the easterly half of the channel which had been engaged in government work there carried on. By reason of the presence of this dredge it was desirable or necessary that vessels of considerable size in ascending or descending the channel should keep to the westerly side of the dredge. The Hampshire and two other barges, the Annie M. Ash and the Elk Garden, were being towed by the tug Sweepstakes up the river tandem, or one astern of the other, in the order in which they are above named. The Hampshire was connected with the tug, and the several barges were connected together by hawsers running from stem to stern, each about 300 feet long, the total length represented by the tug, the hawsers and the barges being about 1200 or 1300 feet. The Santa Maria was being towed down the river by the tug John E. Mehrer, hereinafter referred to as the Mehrer, the tug Bristol and the tug Brandywine; the Mehrer being ahead and connected with the steamship by a hawser leading off the starboard bow of the latter, and the Bristol and the Brandywine being fastened alongside of the steamship, the former on her starboard quarter and the latter on her port quarter, and the length of the Mehrer and her tow being between 700 and 800 feet. The Hampshire received and was the only vessel that did receive damage from the collision, and the Davis Coal and Coke Company as her owner filed a libel in rem against the steamship, the Mehrer (now called the Pennsylvania), the Bristol, and the Brandywine. Subsequently the Sweepstakes was, on the petition of the Brandywine, brought in as a respondent under rule 59

(29 Sup. Ct. xlvi). The owner of the Hampshire also filed a libel in personam against William J. Grandfield and others, owners of the Mehrer. These two suits, numbered respectively 728 and 828, were consolidated for the purpose of saving costs and promoting convenience.

The master and crew of the Santa Maria were aboard of her, but she was without motive power. While there was sufficient steam in her donkey-engines to work the steering-gear and light the ship, there was no steam in her main boilers and she lacked power of self-propulsion. The steamship was being towed from Thompson's Point to Pigeon Point off the port of Wilmington, under a contract between the agent of the steamship and Paul L. Le Compt, who was engaged in the towage business. The compass course of the Schooner Ledge Range is about southwest by west one-half west and that of the Bellevue Range is about southwest, one quarter south, the difference between the two courses being approximately nineteen degrees. Owing to this angle between the two ranges, a vessel ascending the channel below its bend, and approximately along its center, would normally display its starboard or green side light to a vessel descending the channel above its bend and approximately along its center, and at the same time the descending vessel would display its port or red side light to the other vessel. If, however, vessels in proceeding to the bend in the channel substantially depart from following its center it is evident that on or a few moments before reaching the bend their side lights may not be so displayed to each other. By way of illustration, the ascending vessel by proceeding substantially to the westward of the center of the channel, may on or about the time of reaching the bend bear on the starboard bow of the descending vessel, the two vessels showing green to green; and the ascending vessel by porting her helm and swinging to starboard may so change her direction toward the east that while still bearing on the starboard bow of the descending vessel it would display to that vessel her port side light.

[1] These considerations will serve to solve certain questions respecting the position and course of the Sweepstakes and the Mehrer in relation to each other at and a few moments before the collision, which would otherwise be inexplicable.

It is shown by the evidence beyond dispute that when the Sweepstakes with her tow was proceeding up the channel but at some distance below the bend, and at the same time the Mehrer with her tow was moving down the channel, but at some distance above the bend, the starboard side lights of the Sweepstakes and her tow were visible to the Mehrer and her tow, and the port side lights of the Mehrer and her tow were visible to the Sweepstakes and her tow. The bend in the channel opposite or just above the dredge renders it natural and probable that the Mehrer with her tow approaching the bend in her course down the river should first see the starboard side lights of the Sweepstakes and barges she was towing, and that the port side lights of the Mehrer and the Santa Maria should have continued visible to the Sweepstakes from the time the Sweepstakes was at a point considerably down the river until she began to bear on the starboard bow of the Mehrer. The fact, as shown by the evidence,

that while at some distance from the Mehrer the Sweepstakes saw only her starboard side light, and that of the Santa Maria, shows that if the Santa Maria was going down approximately along the center of the channel and following the line of the channel—and the weight of evidence is to that effect—the Sweepstakes with her tow must have directed her course diagonally toward the westerly side of the channel and across the bow of the Mehrer and Santa Maria to such an extent that their port side lights were shut out. The Sweepstakes and her tow were nearly a quarter of a mile in length, and that she should have so directed her course is not unnatural but altogether probable in view of the length of her tow and the proximity of the dredge, especially if she intended to swing eastwardly when or just after passing the dredge. While the distance between the Sweepstakes and the Mehrer was lessening, the former vessel gave a single blast signal indicating to the Mehrer her intention to pass her port to port. The latter vessel promptly replied with a single blast, thereby acquiescing in the proposed maneuver of the former. At what distance the Mehrer and Sweepstakes were apart at the time the latter gave her single blast signal, is a point on which there is much loose and contradictory oral evidence, the distance being variously stated at from one-eighth to three-quarters of a mile. These varying statements of distance are as unsatisfactory and unreliable as usually are estimates of time in collision cases. But whatever may have been the exact distance the circumstances show that the Mehrer with its tow was too near the Sweepstakes to justify any attempt by the latter vessel unnecessarily to cross the bow of the Mehrer. At or about the time of the exchange of the single blast signals, the Sweepstakes ported her helm and swung sharply toward the easterly side of the channel, and the Mehrer ported her helm and swung toward the westerly side. A few moments after porting her helm, the Sweepstakes while swinging to starboard blew a danger signal but did not stop or lessen her speed. She and the Mehrer cleared each other, but the Hampshire, towed by the former, came in collision with the Santa Maria striking her on the starboard bow and receiving the damage on account of which this suit was instituted. The libelant contends that as the Sweepstakes was swinging to starboard in order to pass the Santa Maria red to red, the latter vessel gave a sudden sheer to port or eastward, bringing her bow across the course of the Hampshire, and that had it not been for such sheer the collision would not have occurred. This contention for several reasons cannot be sustained.

First, a clear preponderance of the testimony directly bearing upon the subject is against the alleged sheer. Secondly, a sudden and substantial sheer of the Santa Maria to the eastward was under the existing circumstances a physical impossibility. She was without the power of propulsion. There was nothing in the condition of wind or water to cause such a sheer, and there is satisfactory evidence that neither the steering of the Santa Maria by her own helm, nor the action of the Bristol and the Brandywine on her starboard and port quarters had the remotest tendency to produce such a sheer. Further, the Mehrer was to the extent of its ability trying to pull the bow of

the Santa Maria to starboard or westward by means of the tow-line. Under these circumstances the claim of a sudden sheer by the steamship is a fanciful, unnatural and impossible contention. The captain of the Mehrer, who has no bias in favor of the Santa Maria, says:

"Such a sheer to port as is alleged by the Sweepstakes was most unlikely to occur while the Mehrer was off to starboard pulling in that direction upon the Santa Maria's bow."

The testimony given by witnesses on the Sweepstakes and her tow as to the occurrence of the alleged sudden sheer may have been given in good faith and according to the understanding at the time of those so testifying, but is not reliable for the reason that owing to the motion, direction and position of the several vessels in approaching each other, and the comparative darkness, the Santa Maria may have appeared, contrary to the fact, to be moving eastwardly; and that she should have so appeared to those on the Sweepstakes and her tow was almost inevitable in view of the fact that she was not promptly following the Mehrer and of the further fact that by reason of her failure to do so her bow so projected across the curved line of approach of the Hampshire that the latter vessel struck her starboard bow after the Sweepstakes had passed in safety. There is no occasion to impute falsity to those who, misled by the appearance of things under the circumstances, supposed that the Santa Maria had made or was making a sudden sheer. From the size of the Santa Maria she was slow in responding to the efforts of the Mehrer to pull her to westward. She could not follow in the track of the Mehrer, but was moving down the river eastward of that track, thus exposing her starboard bow to collision with the Hampshire as she swung upward and eastwardly in tow of the Sweepstakes. There was a combination of inertia and momentum on the part of the Santa Maria but no sheer.

It is important to ascertain the distance between the Mehrer and the Sweepstakes and their relative positions in the channel, and with respect to each other at the time the latter vessel gave the one blast signal. Careful analysis of the evidence will enable this to be done with approximate accuracy. A preponderance of the evidence, direct and circumstantial, shows that the two vessels were not at the most more than a quarter of a mile apart when the single blast was blown by the Sweepstakes, and that the latter vessel immediately before porting her helm to cross the bow of the Mehrer was headed in a direction which, as hereinafter more particularly stated, could have been followed without risk of collision—the two vessels passing each other green to green. But it is claimed by the libelant that the Santa Maria was coming down in the easterly half of the channel in violation of the rule governing the navigation of narrow channels, and that it was not only the right but the duty of the Sweepstakes with her tow to proceed up the channel on its easterly side. The evidence, however, shows that the Mehrer and Santa Maria were approximately in the middle of the channel. The presence of the dredge was enough to keep them from encroaching to any considerable extent on the easterly side of the channel.

[2] Further, Article 25 of the Rules of Navigation of Inland Waters of the United States in force at the time of the collision, provides as follows:

"Art. 25. In narrow channels every steam-vessel shall, when it is safe and practicable, keep to that side of the fair-way or mid-channel which lies on the starboard side of such vessel."

And Article 27 of the Rules is as follows:

"Art. 27. In obeying and construing these rules due regard shall be had to all dangers of navigation and collision, and to any special circumstances which may render a departure from the above rules necessary in order to avoid immediate danger."

In Three Brothers, 170 Fed. 48, 95 C. C. A. 322, it was well said of Article 25, above quoted:

"Its purpose is to prevent collisions, not to produce them. It is not an inflexible rule to be followed in all cases, and, where it is manifest that a blind adherence will produce disaster, it is not only the right but the duty of the navigator to disregard it. The rule so states explicitly. It must be followed only 'when it is safe and practicable.' "

It is contended on behalf of the Sweepstakes that when she gave her one blast signal, she was distant from the Mehrer from a half to three-quarters of a mile, and that at that time the Mehrer was exhibiting her port side light to the Sweepstakes, and was bearing a point or more on the port bow of the latter vessel, indicating that these two vessels would pass each other red to red. If that were true the collision in question manifestly could not have occurred. This contention is met by fatal difficulties. If the Sweepstakes had been so far distant from the Mehrer when the single blast whistle was blown, and pursuing the course up the channel she claims to have kept, it would, owing to the bend in the channel, have been physically impossible that the Mehrer should then have borne on her port bow. She necessarily would have borne on the Sweepstakes starboard bow. Further, if the distance between the two vessels had been much less than a half or three-quarters of a mile when the single blast signal was given, and they were showing red to red, the collision could not have occurred. Aside from some mysterious and inexplicable sheer to port, both positive and extensive, which clearly is negatived, directly as well as circumstantially, no mere failure on the part of the Santa Maria, owing to her size and consequent inertia and momentum, promptly to respond to the pull of the Mehrer to starboard, could have caused or accounted for the collision. The witnesses for the Sweepstakes who say they saw the port side lights of the down coming tow bearing one to two points off her port bow at a time when she was coming up substantially on the ranges, evidently have confused what they saw after the Sweepstakes gave the single blast signal, and changed her course to starboard, bringing her red to red with the Mehrer, with what they now suppose they saw prior to such change. An undeniable and dominant fact in the case, so far as the Sweepstakes is concerned, is that she crossed the course of the Mehrer eastwardly within a perilously short distance from her in view of the length of tow of each of the vessels. As before stated, the Mehrer and the Santa Maria were descending the river approximately

in the middle of the channel. The Sweepstakes must therefore have been and was in the westerly portion of the channel at the time she gave the one blast signal, and swung toward the New Jersey shore; and at that time she bore slightly on the starboard bow of the descending Mehrer and Santa Maria, and there is evidence that until the Sweepstakes so changed her course she exhibited her starboard side light to the Mehrer and her tow, and both vessels were pursuing their respective courses, green to green. This evidence is strongly corroborated by the circumstances. The Sweepstakes and her tow of barges were nearly a quarter of a mile long, and in leaving the lower and entering upon the upper range the Sweepstakes would naturally keep so far toward the westerly side of the channel as to allow ample margin for her line of barges safely to pass to the west of the dredge, which was at a considerable distance from the easterly side of the channel, and thence to proceed on her course up the river. The Sweepstakes and the Mehrer, being green to green, and there being an abundance of water to the west of the Mehrer for the Sweepstakes and her tow to pass the Mehrer and her tow on that side, there was no sufficient, if any, reason why the Sweepstakes should not have followed a course to the west of the Mehrer. Had this been done the collision would not have occurred.

Opinions as to distance and lapse of time in collision cases are proverbially uncertain and unreliable, and the usual conflict of testimony on this point is here present. But such discrepancies do not obscure the facts that on the evidence after the green lights of the Sweepstakes and her tow became visible to the Mehrer and her tow as the former were coming up the Bellevue Range or course, there was only one change on the part of the Sweepstakes from green to red, which occurred when she swung to starboard under a ported helm in order to cross the course of the Mehrer; that the port side light of the Sweepstakes could not be seen by the Mehrer until after the former vessel had begun to swing to starboard in execution of her above intention; that the Sweepstakes was at the time she ported her helm closer to the Delaware shore than was the Mehrer; that immediately before beginning to swing to starboard the Sweepstakes was on the starboard bow of the Mehrer showing green to green; and that the Sweepstakes instead of porting her helm could have continued on her course, possibly, with a slight deflection westwardly, and safely passed the down coming tow, green to green. The Sweepstakes had two plain courses of action open to her; first, seasonably to give a signal to the Mehrer to pass red to red, and, secondly, in view of the Sweepstakes being in the westerly half of the channel, to hold or direct her course to the west of the down coming tow, passing green to green. But she did neither. She did not seasonably blow to the Mehrer or Santa Maria, nor did she hold her course to the west after reaching a point from which it was hazardous in the extreme to swing to starboard. Through inattention or recklessness or unjustifiable insistence on her supposed right to move up the river in the easterly half of the channel regardless of surrounding circumstances, she wrongly directed her course to starboard without attempting to stop or slacken her speed, which was about nine miles per

hour with the tide, and so brought about the collision. She was clearly in fault for not directing her course to the westward of the Mehrer and for not seasonably signaling the Mehrer to pass red to red; and for not stopping or attempting to stop or slacken her speed before getting into dangerous proximity to the Mehrer and her tow. The Sweepstakes is confronted with the horns of a dilemma. If she did not whistle until she was showing red to red with the Mehrer, she necessarily changed her course before whistling, and whistled too late; and if she whistled before changing her course, she whistled when she was showing green to green with the Mehrer, and there was no occasion or excuse for changing to starboard.

With respect to the Mehrer but little need be said. She as the leading tug was, to the exclusion of the Santa Maria, the Bristol and the Brandywine, entrusted with the selection of the course of navigation. Knowing that she had in tow a large and ponderous vessel impossible quickly to be diverted from the course she was pursuing she was clearly in fault in assenting to and acting upon the single blast signal received from the Sweepstakes, instead of refusing to join in the proposed maneuver and promptly giving danger signals, and slackening her speed as far as could be done with safety. Had she done so it is probable that the Sweepstakes would not have persisted in pursuing her eastward swing from the westerly side of the channel, and the collision might and probably would have been avoided.

But while the Sweepstakes and the Mehrer are responsible for the collision the evidence does not, I think, disclose fault on the part of the Hampshire, the Santa Maria, the Bristol or the Brandywine. The Hampshire was controlled in her movements by the Sweepstakes and her own helm. An able seaman was in charge of the Hampshire's wheel, and she followed without unnecessary or undue deflection the course of the Sweepstakes.

The Santa Maria, without power of self-propulsion was, as before stated, being towed down the river under a contract with Le Compte, who was engaged in the business of towing vessels. While her captain and crew were on board of her, she was nevertheless in charge of and wholly subjected to the control of the Mehrer, as the leading tug, and the Bristol and the Brandywine, placed respectively on her starboard and port quarters to steady her and to take part in controlling her movements as should be directed. The captain of the Bristol was entrusted with the general management of the towage service, the selection of the course to be followed down the river, however, being exclusively confided to the Mehrer. It appears from the evidence that both the Bristol and the Brandywine were faithful in their discharge of duty. The Santa Maria escorted by the three tugs had safely and properly been brought down the river from Thompson's Point on her way to Pigeon Point until the Sweepstakes had given her single blast signal and the same had been answered by the Mehrer. Promptly on hearing the Mehrer's answering blast, the wheel of the Santa Maria was ported and the engine of the Bristol was put astern, and that of the Brandywine ahead, in order to facilitate the swinging of the Santa Maria to starboard after the Mehrer; and this continued until it became manifest that a collision was impending, when the engines of

both tugs were put astern in order to overcome, if possible, the headway of the Santa Maria. The sheer, however, of the Sweepstakes across the course of the Mehrer and the Santa Maria was so sudden and in such close proximity to them, that it was impossible to overcome the momentum of the Santa Maria and her tendency to move without deflection down the channel before the Hampshire came in contact with her starboard bow. On behalf of the Hampshire and the Sweepstakes great stress has been laid on the contention that the Bristol and the Brandywine were too small, and without sufficient power to render it proper to employ them in the towage service in question, and further that the Santa Maria was at fault in permitting them to engage in such service. This position cannot be maintained. The fact that the tugs in charge of the Santa Maria found it impossible to turn her to starboard so speedily as to escape the consequences of the sudden and wrongful sheer of the Sweepstakes across her course furnishes no criterion of their insufficiency successfully to perform the towage service under ordinary conditions. Much more powerful tugs would have failed under similar circumstances. As was well said by one of the witnesses for the Mehrer, "a big ship won't move in an instant, I don't care how many boats you have on her." The tugs had safely taken the Santa Maria down the river without accident prior to the maneuver of the Sweepstakes, and there is nothing in the evidence to indicate that in the absence of such fault on the part of the Sweepstakes they would not have successfully completed the trip without mishap of any kind.

There is a preponderance of evidence that the tugs were of sufficient power under ordinary circumstances to tow a vessel of the size of the Santa Maria on such a trip as she was making. She was in the exclusive charge and control of the tugs, and although her master and crew were on board they took no part in controlling her navigation. The conclusion reached renders unnecessary any discussion of the liability of a vessel under the exclusive management and control of tugs insufficient in power to prevent a collision.

In reaching a conclusion the ex parte affidavit of the mate of the Sweepstakes which was improperly forced into the case against the protest of opposing counsel has been wholly disregarded. Its genesis, the manner in which it was prepared, and the circumstances attending and surrounding it, do not commend it to the favorable consideration of the court. To recognize it would involve a wide departure from the uniform practice observed here.

The libel as against the Santa Maria, the Bristol, and the Brandywine must be dismissed with costs. It must be sustained, however, with costs, as against the Sweepstakes and the fund in court representing the Mehrer; and both of those vessels having been at fault the damages and costs must be equally divided. The cause must be referred to a commissioner to assess the damages and costs.

A decree in accordance with this opinion may be prepared and submitted.

THE EPSOM.

(District Court, W. D. Washington, N. D. October 16, 1915.)

No. 3030.

1. ADMIRALTY ⟹5—JURISDICTION—SUIT BY CITIZEN AGAINST FOREIGN SHIP—RULE OF COMITY.

An American citizen, by signing shipping articles and entering on his duties as a seaman on a foreign ship, becomes entitled to the protection and benefit of the laws of the country of the ship's nationality; but he does not forfeit his constitutional right to invoke the jurisdiction of the admiralty courts of the United States to determine a dispute arising under the shipping articles.

[Ed. Note.—For other cases, see Admiralty, Cent. Dig. §§ 69–85; Dec. Dig. ⟹5.]

2. ADMIRALTY ⟹5—SUIT FOR WAGES—JURISDICTION.

A court of admiralty, taking jurisdiction of a suit for wages against a foreign ship by one seaman, by reason of his American citizenship, will not dismiss as to other libelants having similar claims.

[Ed. Note.—For other cases, see Admiralty, Cent. Dig. §§ 69–85; Dec. Dig. ⟹5.]

3. WAR ⟹10—EFFECT ON SEAMEN'S CONTRACTS—RIGHT TO TERMINATE EMPLOYMENT—WAR RISKS.

Libelants, in February, 1914, in England, signed shipping articles for three years' service as seamen on a steamship for a voyage to Seattle and other North and South American ports. When they reached a Chilian port, where they laid up several months for repairs, it was learned that war had commenced between Great Britain and Germany and their allies, and that German cruisers were attacking merchant vessels, and one such cruiser twice entered the port for coal. On resuming her voyage, by direction of the officers, the ports of the steamship were darkened at night to avoid being seen. After discharging, the vessel was loaded with a cargo of flour and grain, which was contraband, destined for London. *Held* that, under the English law, libelants were justified in refusing to serve on the return voyage, on the ground that the risk was not the commercial risk which their contract contemplated, and that they were entitled to recover wages to the time they left the vessel.

[Ed. Note.—For other cases, see War, Cent. Dig. §§ 26–36; Dec. Dig. ⟹10.]

In Admiralty. Suit by Andrew Olsen, C. Calicris, Peter Alemonakis, and Nick Trataris against the steamship Epsom. Decree for libelants.

Libel was filed by Andrew Olsen, a citizen of the United States, and C. Calicris, Peter Alemonakis, and Nick Trataris, subjects of Greece, against the steamship Epsom, of British registry, for wages as seamen, alleging, among other things, that on February 13, 1914, at the port of Newport, Moon, England, libelants were employed by the master of the Epsom as stokers, for a voyage to Seattle and other North and South American ports, for three years, at £5. 10s. per month each, that they served as stokers continuously to the time of filing the libel, and that there is due to them as wages, the amounts stated, and then alleges (paragraph 4) "* * * that the kingdom of Great Britain is now at war with Germany and her ally, Austria-Hungary, and that by reason of said war the enemies of Great Britain are preying upon the commerce of Great Britain, and are attacking her merchant vessels, such as the respondent herein, by torpedoes and submarines and other instrumentalities of warfare, and that while upon the high seas and without neutral ports the said steamship Epsom, by reason of being of Brit-

ish register, is in grave danger of being attacked, disabled, and sunk, and that the lives of these libelants and all persons aboard said steamship will be imperiled as soon as said steamship puts to sea, and particularly on her return voyage through the North Sea and the Atlantic Ocean to her home port, and that the employment and service of these libelants upon said steamship is extrahazardous and perilous, and that these libelants are fearful of remaining aboard said steamship upon her return voyage to England, which voyage it is the intention of her master and owners to attempt;" and further states that the contract of employment was entered into prior to the declaration of war, at which time they were not exposed to the hazards and perils of war; that they requested the master to release them from further service and pay them the wages due, which the master refused to do, but "insisted that they make the return voyage, notwithstanding said perils, to England"; that libelants appealed to the British vice consul at Seattle, who refused to order their discharge or the payment of their wages—and pray that the vessel may be sold to pay the wages due, with interest and costs.

Respondent appeared specially, and moved to dismiss the libel upon various grounds, which was denied, upon the ground that Olsen, being a citizen of the United States, was entitled to have the court consider his grievance. Answer was thereafter filed, in which claimant, without waiving its special appearance, denies that libelant Olsen is a citizen of the United States, but admits the other libelants are subjects of Greece, and denies practically all the remaining allegations of the libel, except that it admits that the contract was entered into as therein alleged, admits that the Epsom is a British ship, admits that Great Britain is now at war with Germany and Austria, admits libelants requested to be released from their contract, that the master refused to release them, that they appealed to the British consul, who decided they were not entitled to a discharge, and alleges, in substance, that at the time of the filing of the libel the Epsom was lying in the port of Seattle, making ready to proceed to the port of Portland, Or., there to take on a cargo of grain and flour and proceed through the Panama Canal to Colon and thence to Norfolk, Va., for orders; that the master had no knowledge of his destination after reaching Norfolk, Va., and that the steamer may never cross the North Sea or the Atlantic Ocean to her home port; that respondent has in no way breached the shipping articles; that there is no danger because of the war to libelants while the steamer is proceeding from Seattle, via Portland, to Colon, and from Colon to Norfolk; that, if libelants are fearful, it is entirely unfounded; that there is no provision in the shipping articles excepting the libelants from the dangers of war, if any; and that the laws of Great Britain, under which the contract was made, provide that seamen, shipping under articles such as those in issue, shall not be entitled to sue in any court abroad for wages unless discharged with the sanction of the laws and written consent of the master, or unless they prove such ill usage on the part of or under authority of the master as to warrant apprehension of danger to their lives, and that all seamen who shall desert the ship during period of service shall forfeit all wages then due, and, if the seaman shall refuse to proceed on the voyage which he has agreed to make, he shall forfeit the wages due him at that time; that such is the common maritime law of the world, and that none of the libelants have been so discharged, as provided by law; that libelant Olsen represented that he was a citizen of Norway; that his name appears on the shipping articles as a citizen of Norway, and the claimant and master accepted him under that belief, and if he was a citizen of the United States he falsely misled the master and claimant as to his nationality, and is estopped from asserting differently in this action.

Upon the trial the evidence established the fact that Olsen is a citizen of the United States, and, among other things, that upon the arrival of the Epsom at the port of Punta Arenas, Chili, in August, 1914, libelants and other members of the crew first learned that war had been declared between England and its allies, and Germany and its allies, and that German war vessels were preying upon English merchant ships; that the Epsom remained in port for six months making necessary repairs, and during this time libelants and other members of the crew had access to the public press and read

the comments with relation to the war, especial emphasis being given to the destruction occasioned by the Karlsruhe, Nurenberg and Dresden; that while in port the Dresden put into port twice for coal; that on the voyage from this port to Seattle, upon orders of the first mate, the portholes were covered to obscure the lights, and but one mast light was burned; that the crew maintained a lookout watch for the enemy's ships until the vessel arrived at Victoria, B. C., from which place it proceeded to Seattle. At Seattle the Greek libelants were not allowed to land by the immigration officers, and were forced to remain with the ship, and at Portland, Or., the objection being removed, they were permitted to land and returned to Seattle. When request was made to the British consul, and denied, he stated, as shown by his testimony, "At the time I told all parties there was no danger in these waters as far as we knew," and also stated, "I told them this was not the time to take up the matter, but that it should be taken up at Portland or Norfolk." Libelants understood from the officers on the ship that the vessel was bound for London, and after having loaded at Portland, Or., with a cargo of grain and flour it proceeded to London. The outward manifest shows that the vessel was bound for London. Application was made for permission to present further evidence to show that the vessel did stop at Norfolk. The application shows that the vessel did stop at the coal bunkers at Norfolk, but the testimony was not deemed material, and application was denied. Libelants did not know at the time of filing the libel that the Dresden was destroyed.

Ryan & Desmond, of Seattle, Wash., for libelants.
Huffer & Hayden, of Tacoma, Wash., for claimant.

NETERER, District Judge (after stating the facts as above). [1] The rights of the parties are determined, not by reference to any special trip, but by reason of the change of risk from commercial risk to extraordinary risk of war. The fact that there was greater danger on a voyage over waters in the German war zone does not eliminate danger over waters not included in such zone, or along the Pacific and Atlantic Oceans, washing the shores of the United States. A conclusion that there was no danger was entirely speculative, and was so considered by all parties. Claimant urges the want of jurisdiction of this court, and while this question was raised on the consideration of the motion to dismiss, no memorandum was filed, but the order was orally directed. A review of the cases cited, The Walter D. Wallett (D. C.) 66 Fed. 1011, 1012, and The Kentigern (D. C.) 99 Fed. 443, leads to the same conclusion. In The Walter D. Wallett, supra, the court stated that admiralty courts may, in their discretion, take jurisdiction in cases made by foreign seamen, but held, upon the authority of The Belgenland, 114 U. S. 355, 5 Sup. Ct. 860, 29 L. Ed. 152, that in the absence of treaty stipulation with England, on general principles of comity, the admiralty courts of this country in such cases, except for special reasons, while not bound by, will always pay due respect to, the wishes of the foreign consul as to taking jurisdiction. That was an issue raised between a British seaman and a British ship for injury on the high seas. In The Kentigern, supra, the federal court entertained jurisdiction of an action for services of a seaman based upon his contract, broken by assault upon him by the master of a British vessel, within the police limits of the United States, although the British consul had denied libelant's request for release, and requested the court to decline jurisdiction of the matter.

The further contention that Olsen, on signing the shipping articles

on the British vessel, lost his privilege of claiming rights under the "Stars and Stripes" for wrongs suffered, but that his remedy was under the "Union Jack," and all remedy for wrongs must be asserted under the British law, and not under the law of the United States, is not determined by the citations, Ross v. McIntyre, 140 U. S. 453, 11 Sup. Ct. 897, 35 L. Ed. 581, Rainey v. N. Y. & P. S. S. Co., Ltd., 216 Fed. 449, 132 C. C. A. 509, and Leon XIII, 5 Aspinall's Reports of Maritime Cases (N. S.) 25, 73. Justice Field, in Ross v. McIntyre, supra, 140 U. S. at page 472, 11 Sup. Ct. at page 903, 35 L. Ed. 581, said:

"The national character of the petitioner, for all the purposes of the consular jurisdiction, was determinable by his enlistment as one of the crew of the American ship Bullion. By such enlistment he becomes an American seaman—one of an American crew on board of an American vessel—and as such entitled to the protection and benefits of all of the laws passed by Congress on behalf of American seamen, and subject to all their obligations and liabilities."

Judge Ross, in Rainey v. N. Y. & P. S. S. Co., supra, 216 Fed. at page 454, 132 C. C. A. 514, said:

"When Rainey, although a citizen of the state of Washington, went before the British consul at Seattle and signed the shipping articles, and thereupon stepped upon the British ship flying the British flag as a member of its crew, * * * he stepped upon British territory and became entitled to the protection and benefit of all British law in behalf of British seamen, and subject to all of its obligations and liabilities."

In The Leon XIII, supra, at page 26, it is said:

"It is, I conceive, a settled doctrine of law that, when a subject of one country enters into the service of a ship belonging to the subject of another country, he must be considered pro hac vice to be a subject of the country to which the vessel belongs."

The principle enunciated by these distinguished jurists cannot be denied, but is not applicable here, nor determinative of the issue. An American citizen, when he signs shipping articles and steps upon a British ship, flying the British flag, becomes entitled to the protection and the benefit of the British law as fully as a British subject; but he does not thereby forfeit his citizenship, nor his right to redress wrongs in the courts of his own country. The right to invoke the jurisdiction of the federal courts by a citizen of the United States for the purpose of determining a dispute under shipping articles with a foreign vessel is a constitutional right, which the courts cannot deny. The people have ordained by the Constitution that judicial power shall be vested in the national courts, and that the judicial power shall extend to all cases of admiralty and maritime jurisdiction. These provisions without doubt are for the purpose of creating a tribunal where a citizen of the United States may as a matter of right seek redress of wrongs cognizable in admiralty, and enforce legal rights. This may not be denied. It was so held by Judge Hanford, in The Falls of Keltie (D. C.) 114 Fed. 357; The Neck (D. C.) 138 Fed. 144; and the reason for taking jurisdiction is more pronounced in this case.

It is strongly urged that Olsen misrepresented his citizenship upon his employment. The master testified that Olsen misrepresented his

nationality, and that he would not have employed him, had he known he was an American citizen. It seems that, when libelant was asked his nationality, he replied that he was a Norwegian, not appreciating citizenship was required. The error can very readily be understood. Nationally he is a Norwegian; by adoption he is a citizen of the United States; and it does not appear that he knowingly intended to practice any fraud upon the master. At any rate, he is a citizen of the United States, and, if misrepresentation with relation to citizenship was made, such fact would not close the doors of the courts of the United States against entertaining jurisdiction of an admiralty wrong which he seeks to have righted under the issue in this case, and no other relief is asked against him.

[2] The court, taking cognizance of one libelant because of his citizenship, will not dismiss the other libelants, but will inquire into the grievances of all.

[3] The right of recovery depends upon the question whether the ordinary commercial contract entered into in time of peace may be abrogated by a seaman because of the extraordinary risks occasioned on account of the existence of war. Seamen cannot be relieved from a shipping contract because they do not like the "job," or because of present or anticipated conditions of the weather, or for any cause which was or could reasonably have been in the minds of the parties at the time of making the contract; nor can the master require seamen to assume greater risks than the commercial risks contemplated by the contract. The Epsom flew the British flag, was loaded with grain and flour, contraband articles, destined for London, England, sailing over waters on which had been seen by these sailors, German war vessels. It cannot be doubted that the master thought there was danger, for the lights of the vessel were hidden, and the seamen maintained a lookout watch for German war vessels. The British consul thought the request for release was premature, and should be made at Portland or Norfolk. All the evidence shows that these men acted in good faith, and that there was in their minds a probability of capture. If there was in fact no danger, that has not been established. Seamen cannot be expected to weigh with too much nicety the chances of capture, or speculate upon the movements of belligerent war vessels. The destination of the ship was London. The cargo was a London cargo. The manifest showed London to be its destination. The fact that it stopped at Norfolk, for whatever purpose, cannot serve to press the seamen into service or forfeit their wages. They agreed to serve on a voyage attended by the risks of peace, and not on a voyage attended by the risks of war.

It is conceded that the issue is governed by the English law. The crew of the Carpathian (Liston v. Owners of S. S. Carpathian, vol. 20, part. 4, Adv. Sheets of Commercial Cases, decided February 10, 1915), signed articles for a voyage to Port Arthur, Tex. Upon arrival there they learned war had been declared between Great Britain and Germany, and also that a German cruiser was in the vicinity. They refused to proceed without additional compensation, which the master agreed to pay them. When the vessel arrived in England, the owners refused to pay, upon the ground that the master had not authority to enter into

the agreement. The seamen brought suit, and the court held the master under the circumstances, was authorized to make the agreement; Lord Coleridge saying:

"It is quite clear that seamen cannot demand release from their contracts merely because they do not like the conditions under which they work, or because there is a probability of bad weather, or for some similar reason. Such things are in the minds of all the parties when they enter into these contracts. But it cannot be said that, prima facie, it is within the reasonable contemplation of parties entering into an agreement of this character that war may break out between the nation to which the owners of the ship belong and another maritime power, whose vessels may be met with on the very course the ship is destined to take. Of course, the mere fact of war breaking out might not involve a ship or her crew in any substantial risk, or indeed, in any risk at all. But here so great was the risk run by this vessel that she crossed the Atlantic without lights, and when she reached the English Channel she was diverted from her course by a British cruiser, who bade her put in at London and abstain from proceeding to Rotterdam, her port of destination. * * * The plaintiffs knew that they would not only have to cross the Atlantic, possibly within sight of the German cruiser Karlsruhe, which was in the vicinity. There was also danger from mines. * * * Then their voyage up the English Channel could not be other than fraught with peril. I am of the opinion that, while there was no certainty of danger being met with, there was every risk of it. The crew, therefore, were justified in refusing to continue the voyage without the introduction of special terms as regards wages."

In Palace Shipping Co. v. Caine et al., 76 Law Journal, 1079, Kings' Bench Division, decided in 1907, plaintiffs contracted for a three-year voyage upon the steamship Franklyn to Hong Kong and other ports. When the ship left England with a cargo of coal, Japan and Russia had been at war for more than a year. Upon arrival at Hong Kong, the seamen were told that she intended to proceed to Sasebo, a Japanese naval base. Coal had been declared contraband by Russia, and against Great Britain's protest a number of neutral ships carrying coal had been sunk. The seamen, upon refusal to proceed, were tried before the port magistrate in Hong Kong, and sentenced to imprisonment. Upon the expiration of their term they brought suit against the vessel, and the court held they were wrongfully imprisoned, and could not be compelled to proceed upon a voyage attended with risks not contemplated by their contract, and were entitled to recover their wages. Lord Loreburn, at page 1081, said:

"The master had no right to require that these men should sail for Sasebo, for the risk was not a commercial risk, nor the voyage a commercial voyage, such as the articles contemplated. The contention that there was in fact no danger of capture is not established. I cannot doubt that the owners themselves thought there was danger, and the men thought so also, and with reason. It is nothing short of preposterous to expect that seamen in a strange port shall speculate on the movements of belligerent war vessels, and nicely weigh the chances of capture."

Lord James Hereford, concurring, said:

"In determining what amounts to a justification for seamen refusing to proceed to sea, I do not think that they are called upon to prove by positive and legal evidence that there was an actual probability of capture. Their decision has to be formed upon such general information as is at the moment at their disposal. Doubtless their decision must not be based on merely arbitrary grounds. Good faith is a necessary element, and such good faith

would not exist, unless some reasonable grounds for the refusal can be alleged."

Lord Atkinson, concurring as to the right of discharge, said:

"It is, I think, equally clear that this risk of capture is not one of the risks ordinarily attending a commercial voyage or adventure of a peaceful nature. The risk of capture may be so remote that it leaves the character of such a voyage practically unchanged, or so proximate and imminent as to entirely change its character. It must be a question of degree, to be determined in each case on its own special facts. * * * It was, however, for an ordinary commercial voyage of a peaceful nature that the crew in this case engaged to serve. And, in my opinion, the burden of rebutting the prima facie presumption above mentioned, and establishing that the risk of capture was so remote that the character of the voyage remained practically unchanged from that which the crew supposed it to be when they signed the articles, rested upon the owners of the ship, or their agent, the master. I do not think that they or he discharged that burden simply by proving that, at the port from which the voyage across the theater of war was to commence, it was the opinion of the officials in a position to judge that, owing to the crippled condition of the naval forces of that belligerent by whom capture, if it was to take place, was to be apprehended, there was no real risk or danger of capture at all."

Lord Escher, in O'Neill v. Armstrong-Mitchell & Co., 65 Law Journal, 7, Queen's Bench Division, said, at page 10:

"The moment war was declared the sailors were exposed to the risks attending the infringement of the foreign enlistment act, and of being attacked by the Chinese; so that by the act of the captain's principals, the Japanese government, in declaring war, an ordinary voyage was changed into a voyage of risk. The captain was bound by that, and the seamen were entitled to say that there had been such an alteration of the circumstances of the voyage as to give them a right to leave the ship and claim the whole of the agreed wages for the voyage."

This was a case in which O'Neill engaged as a seaman aboard an English vessel for a voyage which the defendants contemplated, pursuant to an agreement with the Japanese government, to deliver a torpedo boat, constructed in England, to Japan. Before the voyage was completed, Japan declared war with China, and at the port of Aden plaintiff refused to continue the voyage. I do not think that the voyage was such as was contemplated by the agreement.

It is stipulated that the amount of wages, less deductions made, earned by the seamen on the date of the libel, was:

Andrew Olsen	$207.47
C. Calicris	221.51
Peter Alemonakis	264.78
Nick Trataris	255.55

Reason and justice would dictate that these seamen be released from the contract, and this is amply sustained by English authority.

A decree may be presented.

H. B. MARIENELLI, Limited, v. UNITED BOOKING OFFICES OF AMERICA et al.

(District Court, S. D. New York. July 31, 1914.)

1. COMMERCE ⟹43, 44—INTERSTATE COMMERCE—WHAT CONSTITUTES—THEATER BOOKING AGENCY.

Where vaudeville theaters were arranged in circuits, and it was the practice to book performers for the whole or part of one circuit under one contract, requiring them to pass from theater to theater and from state to state, taking with them certain paraphernalia and stage properties, certain aspects of the business of the theater owners and their booking agents constituted interstate commerce, as, for instance, the contracts under which the performers were to go from state to state, fulfilling their contracts as much by the travel as by the acting, the carriage of their stage properties and paraphernalia from one state to another, and the sending by the theaters themselves from state to state of scenery and advertising matter.

[Ed. Note.—For other cases, see Commerce, Cent. Dig. §§ 32, 35; Dec. Dig. ⟹43, 44.]

2. MONOPOLIES ⟹12—COMBINATIONS IN RESTRAINT OF INTERSTATE COMMERCE.

Whether a combination causes a restraint of interstate commerce must be judged by the usual rule of legal responsibility; that is, whether the effect upon the interstate movement of goods or persons is within those consequences which would reasonably be supposed to result from the acts of the parties, but results insignificant in proportion to the total effect will be disregarded.

[Ed. Note.—For other cases, see Monopolies, Cent. Dig. § 10; Dec. Dig. ⟹12.]

3. MONOPOLIES ⟹12—COMBINATIONS IN RESTRAINT OF INTERSTATE COMMERCE.

A number of vaudeville theaters scattered over the United States were arranged into circuits, and it was the practice to book performers over the whole or part of one circuit under one contract, requiring them to pass from state to state, taking with them certain paraphernalia and stage properties. The owners of such theaters and their booking agents entered into a combination or conspiracy in restraint of their own business, whereby the theater owners were not to employ performers not booked through booking agents, and the booking agents were not to act for any theater employing any other booking agent, or employing any performer who played outside such circuits, or who had as a representative any person who had obtained employment for a performer outside such circuits. Any theater employing such a performer would be blacklisted, and the booking agents would not act for it. *Held*, that the effect of a monopoly of such business upon interstate commerce was not so inconsiderable as not to come within the Sherman Act (Act July 2, 1890, c. 647, 26 Stat. 209).

[Ed. Note.—For other cases, see Monopolies, Cent. Dig. § 10; Dec. Dig. ⟹12.]

4. MONOPOLIES ⟹12—COMBINATIONS IN RESTRAINT OF INTERSTATE COMMERCE.

That a state has power to tax a business is not determinative that a combination monopolizing such business is outside the Sherman Act; nor does it follow, because a combination is within the act, that the business may not be subject to a state tax.

[Ed. Note.—For other cases, see Monopolies, Cent. Dig. § 10; Dec. Dig. ⟹12.]

5. MONOPOLIES ⟹12—COMBINATIONS IN RESTRAINT OF INTERSTATE COMMERCE.
A combination may be within the Sherman Act, though concerned in great part with internal matters.

[Ed. Note.—For other cases, see Monopolies, Cent. Dig. § 10; Dec. Dig. ⟹12.]

6. MONOPOLIES ⟹12—COMBINATIONS IN RESTRAINT OF INTERSTATE COMMERCE.
In an action for damages caused to plaintiff by a combination in restraint of interstate commerce, it is immaterial whether the acts in pursuance of the combination which injured plaintiff were themselves acts of interstate commerce; the illegality arising from the project or plan as a whole.

[Ed. Note.—For other cases, see Monopolies, Cent. Dig. § 10; Dec. Dig. ⟹12.]

7. MONOPOLIES ⟹12—COMBINATIONS IN RESTRAINT OF INTERSTATE COMMERCE.
A combination between a number of vaudeville theaters and their booking agents, the purpose of which is to keep all first-class performers for such theaters, refuse to allow them to act if they act in other theaters, and refuse to allow other theaters to have their performers if they employ other performers, and refuse to deal with performers' agents who book such performers elsewhere, is in restraint of trade, where it is alleged that, outside of the circuits into which such theaters are arranged, first-class performers cannot obtain sufficient employment in the United States and Canada to make a living, as the necessary inference is that, if successful, the parties to the combination will control all first-class performers, and monopolize the supply, and thus control the business.

[Ed. Note.—For other cases, see Monopolies, Cent. Dig. § 10; Dec. Dig. ⟹12.]

8. MONOPOLIES ⟹28—COMBINATIONS IN RESTRAINT OF TRADE—DAMAGES.
The damages sustained by a performer's agent blacklisted by the members of such combination were within the seventh section of the Sherman Act (Comp. St. 1913, § 8829), providing that any person, injured in his business or property by any other person or corporation by reason of anything forbidden or declared to be unlawful by that act, may sue therefor and recover threefold the damages sustained.

[Ed. Note.—For other cases, see Monopolies, Cent. Dig. § 18; Dec. Dig. ⟹28.]

9. MONOPOLIES ⟹28—COMBINATIONS IN RESTRAINT OF TRADE—ACTIONS—PARTIES.
In an action for damages caused by such combination, all of the parties privy to the general plan were properly joined, though the execution of different parts of the plan was confined to individuals.

[Ed. Note.—For other cases, see Monopolies, Cent. Dig. § 18; Dec. Dig. ⟹28.]

At Law. Action by H. B. Marienelli, Limited, against the United Booking Offices of America and others. On demurrer to the complaint. Demurrer overruled.

This is a demurrer to a complaint at law for damages under the Sherman Act. Its general outline is as follows: The individual defendants collectively own many vaudeville theaters scattered over the United States, which are, roughly, arranged in two circuits—an Eastern circuit, comprising those owned by one set of the defendants, and with other theaters known as the "Keith circuit," and a Western circuit, comprising those owned by other defendants, and with other theaters known as the "Orpheum circuit." The owners of the other theaters making up these two circuits are not parties to the action. The entertainments in these theaters are each made up of short, disconnected acts, aggregating altogether two or three hours. The performers play at a given

place not over one week at a time, and the practice is for them to be booked under one contract upon the whole or part of one circuit, making contracts which require them to pass from theater to theater and from state to state, taking with them certain paraphernalia and stage properties. The two corporate defendants are severally booking agents for the two circuits, securing performers to travel upon the whole or part of each circuit and in general acting as agents for the managers or owners.

Up to the time of the acts here in question the plaintiff maintained offices in London, Paris, Berlin, and New York, from which it observed and sought out all promising vaudeville performers, and advised the defendants when it knew of them, thus establishing a kind of clearing house of information between performers and managers. If opportunity offered, it induced performers to come to this country from other countries, and acted as their agent in procuring for them contracts to perform on one or both of the circuits through the whole or a part of the theaters comprised in it. It arranged for the performer's entrance into the country, passing through the customs his paraphernalia, apparatus, etc., and it advised and helped him to carry them about with him. In general, the plaintiff acted as agent for the performers and as their personal representative in negotiations and contracts with the managers of the theaters, acting through the corporate defendants.

All the defendants entered into a combination or conspiracy in restraint of their own business, to be accomplished as follows: The Eastern owners were not to employ any one not booked through the Eastern booking corporation, which was not to act for any theater which employed another booking agent. They were to procure the assent of the other theaters in the Keith circuit to this plan. They agreed to employ no performer who played outside of the two circuits, and would blacklist any such and post him with the other theaters; the Eastern booking corporation refusing to act for any theater that disregarded the blacklist. No one should be employed who had as a representative any person who had obtained employment for a performer outside of the two circuits, and if any theater employed a performer who had such a representative the Eastern booking corporation should not act for that theater. All such representatives of performers should be blacklisted, and might not thereafter negotiate with the Eastern booking corporation, which would not act as agent for any theater who billed a performer represented by a blacklisted agent. Any theater billing a blacklisted performer should be blacklisted, and the Eastern booking corporation would no longer act for it. The Western booking corporation should be advised of these blacklists.

Similar allegations were made relating to the Western circuit. The defendants in pursuance of this plan did blacklist the plaintiff, and caused notices to be sent out to that effect, and so entirely destroyed the plaintiff's business.

Henry A. Wise, of New York City, for plaintiff.
George W. Wickersham, of New York City, for defendants.

LEARNED HAND, District Judge. [1] The combination or conspiracy is alleged to be in restraint of the defendants' business, and the first inquiry must be of the nature of the business. Undeniably certain aspects of the business are interstate commerce, as, for instance, the contracts made by the booking companies under which the performers must go from state to state, throughout the circuit, acting here and there, and fulfilling their contracts as much by the travel as by the acting. Since Hoke v. United States, 227 U. S. 308, 33 Sup. Ct. 281, 57 L. Ed. 523, 43 L. R. A. (N. S.) 906, Ann. Cas. 1913E, 905, and Wilson v. United States, 232 U. S. 563, 34 Sup. Ct. 347, 58 L. Ed. 728, it cannot be doubted that this feature of the business was within the complete powers of Congress, for such purposes as it might find to the public interest. This, moreover, applies as well to that feature, incidental to the foregoing, which consists in the carriage of the

performers' stage properties and paraphernalia from one state to another, a necessary part of the performance of their contracts with the defendants. The Lottery Cases, 188 U. S. 321, 23 Sup. Ct. 321, 47 L. Ed. 492. The same may be said of the scenery and advertising matter sent from state to state by the theaters themselves. In respect of all these details the business, therefore, consists of interstate commerce.

[2] The nature of the defendants' business is one thing, determinative in cases where the question arises of a state license tax or the like; the subject-matter of their combination is, at least formally, different. Perhaps the distinction has small practical consequence here, yet it is important in such shifty questions to keep the principles in mind. No doubt the proposition still stands good that the restraint of interstate commerce must be direct (United States v. Patten, 226 U. S. 543, 33 Sup. Ct. 141, 57 L. Ed. 333, 44 L. R. A. [N. S.] 325), just as it did when E. C. Knight v. United States, 156 U. S. 1, 15 Sup. Ct. 249, 39 L. Ed. 325, was decided; but nobody can intelligently read the decisions without becoming aware that the actual meaning of the words has greatly changed. All the cases, of course, presuppose that the contract has an effect upon the transit of some goods or persons across state lines, but just what that effect must be is the point of divergence. From some expressions of the earlier cases it might be supposed that the agreement must in its terms concern the transit, or in other words that the conscious purpose of the parties must be to change movement, which would otherwise occur; but that rule is not now the law. Since perhaps Addyston Pipe Co. v. United States, 175 U. S. 211, 20 Sup. Ct. 96, 44 L. Ed. 136, and certainly since United States v. Patten, supra, a case which had an unusual degree of consideration by the Supreme Court, it must be understood that the combination must be judged by the usual rule of legal responsibility; that is to say, whether the effect upon the movement of goods or persons is within those consequences which would reasonably be supposed to result from the parties' acts.

The words "direct" and "indirect" permit of some latitude, as the cases show. In nature all results are equally inevitable, and the category has no useful application; it would be arbitrary and meaningless. Only when we speak of conscious persons, necessarily ignorant of all the causes which actually operate, can the distinction become useful; and it is, of course, only in relation to persons that it is used juristically. As I have said, the rule no longer is that only those results are direct which fall within the immediate purpose, or high light of intention, a rule which would eliminate consequences, certain enough to follow, but neither desired nor intended. When once that test is abandoned, there remains only the common test of legal responsibility, which I have mentioned, or else the test of more or less. It may be that some effects of a combination, certain enough to follow, bear so small a proportion to the sum total that the Sherman Act will not reach the combination as a whole. Although the statute may seem intended to exercise the federal power to its fullest capacity, and although Congress no doubt might make illegal any combination which to the parties' knowledge affected interstate commerce in any degree what-

ever, the decisions of the Supreme Court certainly prove that it has not been so interpreted, and that results insignificant in proportion to the total effect will be disregarded. This, in any case, is the present meaning of the test of "direct" and "indirect" as I understand it in the development of the decisions.

[3] If this be so, then the case depends upon whether the effect upon interstate commerce of a monopoly of the defendants' business is so inconsiderable as not to come within the statute. In the light of the allegations, I do not think that it is such. It may well be that the results of a monopoly of the playhouses within a single state would not come within the statute, though it were shown inevitably to affect the entrance or exit from the state of performers and their accouterments, and though that result were obvious to the parties concerned from the outset. Here there is no such case, because here the contracts of hiring involve for their performance the transit quite as much as the performance. I cannot say that this feature is so inconsiderable a part of the business that it must be disregarded; I must say that it is within the necessary consequences of their acts.

[4, 5] The cases do not seem to me to give a solution for a new situation, for each stands upon its own facts. The insurance cases, ending in New York Insurance Company v. Deer Lodge County, 231 U. S. 495, 34 Sup. Ct. 167, 58 L. Ed. 332, perhaps stand somewhat apart; in any event, they became fixed at an early period and have been continuously reasserted without opportunity for variation. Moreover, the incidental effect upon interstate commerce bears but a small proportion to the business as a whole. They are significant, also, as arising under the legality of a state tax. In this respect they are like Williams v. Fears, 179 U. S. 270, 21 Sup. Ct. 128, 45 L. Ed. 186, Ware v. Mobile County, 209 U. S. 405, 28 Sup. Ct. 526, 52 L. Ed. 855, 14 Ann. Cas. 1031, and U. S. Fidelity Company v. Kentucky, 231 U. S. 394, 34 Sup. Ct. 122, 58 L. Ed. 283. In such cases it is of course apparent that, if a state is to have the power to tax at all, all businesses may not be excluded which in any way have an effect upon interstate commerce, even though Congress might regulate them to the extent that they did. If the rule in Gibbons v. Ogden, 9 Wheat. 4, 6 L. Ed. 23, that the spheres of regulation are mutually exclusive, be so rigidly applied as this, the system will not work. There are indications enough that there is now thought to be a range of governmental activity which the states may enjoy until Congress intervenes. The Minnesota Rate Cases, 230 U. S. 352, 33 Sup. Ct. 729, 57 L. Ed. 1511.

I cannot, therefore, regard those cases as necessarily determinative, in which the question only was of the power of the state to tax a local business, nor does it follow from them that a combination monopolizing the same business is necessarily outside of the Sherman Act. Of course, persons not engaged in interstate commerce may violate the Sherman Act. Loewe v. Lawlor, 208 U. S. 274, 28 Sup. Ct. 301, 52 L. Ed. 488, 13 Ann. Cas. 815. But I mean more than this, for in the case at bar the combination relates to the business as a whole, and not to the interstate features of it. It does not follow, because the combination is within the act, that the business may not be subject to

a state tax. How far the effects upon interstate commerce of the combination must preponderate to bring it within this statute is not a question of the extent of federal powers, but of the extent to which Congress intended to exert such powers. That it intended to reach every conceivable restraint of such commerce may not be true, and the degree to which it reaches is not measured by the power of the states in the regulation of their internal affairs until Congress intervenes. It is no objection that the combination declared illegal shall be concerned in great part with internal matters.

[6] Nor need we be concerned with the question whether the acts in pursuance of the combination which injure the plaintiff are themselves a part of interstate commerce, for the illegality arises from the project or plan as a whole (Swift v. United States, 196 U. S. 375, 25 Sup. Ct. 276, 49 L. Ed. 518; Nash v. United States, 229 U. S. 373, 33 Sup. Ct. 780, 57 L. Ed. 1232), and the performance, innocent without it, takes its color from its setting.

The case of Metropolitan Opera House v. Hammerstein, 162 App. Div. 691, 147 N. Y. Supp. 532, decided by the Appellate Division of the Supreme Court, is not necessarily an authority to the contrary. There the plaintiff was in the habit of presenting opera in several states, and sent its performers, scenery men, and stage properties about as occasion required. It also imported artists from Europe to perform in New York and elsewhere. These elements of its business were certainly interstate, and within the express control of Congress, and the questions turned, as here, whether a monopolization of the business was a restraint upon interstate commerce. If the test really be the proportion of these features to the business as a whole, obviously the case is not an authority, unless the facts are the same. They differ at least in this respect: That it was not there the course of the business to book all performers under one contract, which required them to go from one state to another. Suppose the case of a traveling troupe of players, who were constantly on tour from state to state at short "stands," and who had no fixed playhouse; certainly their business would be interstate. On the other hand, a combination of local playhouses might not be in restraint of interstate commerce, though it affected the interstate movement of actors or scenery. The defendants' business is not so wholly interstate as though they managed a troupe of traveling players, because they own theaters; but it consists none the less in universally securing from the outset that substantially each player shall in fact travel upon interstate tour. I think it fair, fully recognizing the loose character of the distinction, to call the interstate element in the case at bar "essential," and that in Metropolitan Opera Co. v. Hammerstein "incidental." The rule is not so much a constitutive principle as a regulative guide.

[7, 8] There remains the final question as to whether the combination is in restraint of trade. The allegations show that the purpose of the defendants was to exclude from the two circuits any performer who would not deal exclusively with them, any theater which employed any other booking agent or performer, and any performer's agent who dealt with outsiders. Not every contract which destroys a com-

petition, theretofore existing, is within the act; but those are which put a market into one hand. Standard Oil Co. v. United States, 221 U. S. 1, 31 Sup. Ct. 502, 55 L. Ed. 619, 34 L. R. A. (N. S.) 843, Ann. Cas. 1912D, 734. It is the effort to secure control over prices by a control over supply which counts. No doubt "market" is a vague word; a combination may control within such narrow limits that new supplies are available at trivial advances; perhaps such combinations do not "prejudice the public interests." Nash v. United States, 229 U. S. 373, 376, 33 Sup. Ct. 780, 57 L. Ed. 1232. If the combination does not control enough of the supply to fix prices at all, it cannot be an unreasonable restraint of trade prejudicial to the public. In the case at bar the allegations show that the defendants are trying to keep all "first-class" performers for their own theaters, refusing to allow them to act, if they act elsewhere, refusing to allow other theaters to have the circuits' performers if they take others, refusing to deal with any performers' agents who book them elsewhere. Article XIX of the complaint alleges that "first-class" performers cannot obtain sufficient employment in the United States and Canada outside the two circuits to make a living. The necessary inference is that the defendants, if successful, will control all "first-class" performers and succeed in monopolizing the supply. This, in turn, enables them to control the whole business, and constitutes the very conditions which the Sherman Act means to prevent. If in the execution of that project they injure the plaintiff, the resulting damages are within the seventh section of the act.

[9] The complaint is not bad for misjoinder; all the defendants are asserted to be privy to the general plan, and it does not matter that the execution of different parts is confided to individuals. The rules regulating original conspiracies obtain in such cases.

Demurrer overruled; defendants to answer over in 20 days.

CITY COUNCIL OF AUGUSTA v. TIMMERMAN, County Auditor, et al.

(District Court, W. D. South Carolina. October 20, 1915.)

TAXATION ⚷608—SALE OF LAND FOR NONPAYMENT OF TAX—INJUNCTION—POWERS OF FEDERAL COURT.

Civ. Code S. C. 1912, § 460, provides that "the collection of taxes shall not be stayed or prevented by any injunction"; and section 461 provides that any property owner who deems a tax charged against his property unjust or illegal may pay the same under protest and bring an action within 30 days for its recovery, and that the money shall be deposited in the state treasury to await the determination of the suit, and shall be refunded if the tax shall be adjudged invalid. *Held* that, while such provisions are not binding on a federal court, they afford an owner of property claimed to be exempt from taxation under the statutes of the state an adequate remedy at law against the enforcement of a tax thereon, and that such court will not enjoin its collection.

[Ed. Note.—For other cases, see Taxation, Cent. Dig. §§ 1230–1241; Dec. Dig. ⚷608.]

⚷For other cases see same topic & KEY-NUMBER in all Key-Numbered Digests & Indexes

In Equity. Suit by the City Council of Augusta against J. R. Timmerman, Auditor, J. F. Mims, Treasurer, and W. R. Swearingen, Sheriff, of Edgefield County, S. C. On rule for temporary restraining order. Denied.

C. Henry Cohen, of Augusta, Ga., and Hendersons, of Aiken, S. C., for complainant.

B. E. Nicholson, of Edgefield, S. C., and Fred. H. Dominick, Asst. Atty. Gen., S. C., for defendants.

JOHNSON, District Judge. This matter comes before me on return to a rule served upon the defendants to show cause why a restraining order pendente lite should not be issued. The complainant is now, and for more than 40 years has been, the owner of and in the possession of about three acres of land in Edgefield county, in this state. This land was acquired and has been used solely for the purpose of the abutment to a dam, which the complainant has erected according to law across the Savannah river, a navigable stream running between the states of South Carolina and Georgia, and during all these years the dam in question has been used by the complainant, a municipal corporation, for the gathering together of the waters of Savannah river and the passage of the same into canals constructed on the Georgia side to operate pumps, supplying the municipal waterworks, the fire supply, the health supply, and the drinking supply of water for the city of Augusta, in the state of Georgia. The said dam as erected was and is being used for said municipal water supply, and said dam is an essential part of the waterworks system of the city of Augusta. The water that is used and pumped by the city, as well as the power to pump, is produced by the said canal, which is a part of the dam, and the dam is a part of the canal; and the canal, dam and abutment on the South Carolina side, and the land heretofore referred to, are all part and parcel of the waterworks of the city of Augusta, a municipal corporation of the state of Georgia.

Complainant has never paid any taxes upon its aforesaid water plant, either in the state of Georgia or in the state of South Carolina. On the 29th day of April, 1915, the defendant J. T. Mims, as treasurer of Edgefield county, issued an execution against the complainant in this action and its property, and placed the same in the hands of the defendant W. R. Swearingen, sheriff of Edgefield county; the execution being for $747.35, the sum of $674.25 thereof being for taxes for the fiscal year 1914 and the balance thereof being costs and penalties accrued thereon. The $674.25 as taxes arises from the assessment made by the auditor of Edgefield county, J. R. Timmerman, one of the defendants herein. The sheriff has served his execution upon the tract of land containing three (3) acres in the county of Edgefield, state of South Carolina, and so much of the dam as extends from the South Carolina shore to the middle of the river. The complainant also alleges that it is informed that the auditor of Edgefield county has levied an assessment for the year 1915, and that, if the said tax is not paid, the said auditor intends to endeavor to collect the same by seizure, levy, and sale of the property in ques-

tion; and complainant further alleges that it is the intention of the authorities, as aforesaid, to enforce, levy, and collect back taxes.

Complainant alleges that under section 290 of the Code of Laws of South Carolina of 1912, volume 1, all assessments, taxes, and penalties, when regularly assessed, are made a specific first lien on the property taxed, and that according to section 474 of said Code of Laws, in all cases of sales for taxes, the sheriff's deed of conveyance shall be held and taken as prima facie evidence of good title, and that all proceedings have been regular, and that all requirements of law have been complied with. The complainant alleges that any sale that may be made or that may be attempted to be made hereafter for the collection of back taxes will prove a cloud upon the title of this land and dam in question, and that the commission of any other assessment on the property of complainant, or any sale made thereof, or any proceedings for the collection of back taxes, would necessarily involve complainant in various suits, and hence a multiplicity of actions and proceedings would arise. Complainant alleges that, if the assessments, sales, and proceedings were permitted to go on, complainant would suffer irreparable damage and injury, because the title to this property would be questioned, and, if the property was sold, damage beyond question would result to the citizens of the city of Augusta in the state of Georgia.

The complainant declares that by subdivision 13 of section 294 of the Code of Laws of South Carolina (1912) there is provided an exemption from taxation as follows:

> "All waterworks to supply water for the use of a town or city, the machinery and fixtures connected therewith, and the grounds occupied thereby, when owned by any city or town"

—and that complainant is informed and believes, and so charges, that the express provision of the statute law of South Carolina, as well as the common law and equity on the subject of the exemption of municipal bodies from taxation, when applied to the facts in this case, exempts complainant in this action from any taxes, state or county, upon the property hereinabove described.

The defendants made return, and claimed that this court is without jurisdiction of the matters involved in this action for the reasons: (a) In that the amount involved in this action is less than the sum of $3,000; (b) that under the statute laws of the state of South Carolina the complainant has a full and adequate remedy for the matters complained of in the bill in this action, if entitled to any relief therefrom. The return further shows that the only assessments against the property of the complainant in Edgefield county, known as the "city of Augusta dam property," for which James T. Mims, as treasurer of Edgefield county, has issued execution, and which W. R. Swearingen, as sheriff of Edgefield county, is endeavoring to collect, are the state and county taxes for the fiscal year 1914, amounting to $674.25, together with the costs and penalties accrued thereon, making in the aggregate $747.35; that there is assessed against the complainant, on account of its said property, state and county taxes for the year 1915, amounting to $718.30, but the same are not due and

payable until October 15, 1915, and no effort has been made or could be made by these defendants, or any of them, to collect the same until it becomes due; and that, with reference to the back taxes which complainant alleges defendants will endeavor to collect, under and by virtue of the statute law of the state of South Carolina the state may bring suit for back taxes, but that these defendants are not authorized by law to bring such action, and that no such action has been instituted by them, or any of them.

It will be observed that the return questions the jurisdiction of this court on account of the amount involved in this controversy. In my view of the case, it is not necessary at this time to determine that question. Nor is it necessary to construe subdivision 13 of section 294 of the Code of Laws of South Carolina, nor sections 1 and 4 of article 10 of the Constitution of South Carolina. The Code of Laws of South Carolina, volume 1, section 460, provides:

"The collection of taxes shall not be stayed or prevented by any injunction, writ or order issued by any court or judge thereon."

Section 461 of said Code provides:

"In all cases in which any county, state, or other taxes are now or shall be hereafter charged upon the books of any county treasurer of the state against any person, and such treasurer shall claim the payment of the taxes so charged, or shall take any step or proceeding to collect the same, the person against whom such taxes are charged, or against whom such steps or proceedings shall be taken, shall, if he conceives the same to be unjust or illegal for any cause, pay the said taxes notwithstanding, under protest, in such funds and moneys as the said county treasurer shall be authorized to receive by the act of the General Assembly levying the same; and upon such payment being made, the said county treasurer shall pay the taxes so collected into the state treasury, giving notice at the time to the comptroller general that the payment was made under protest; and the person so paying said taxes may at any time within thirty days after making such payment, but not afterwards, bring an action against the said county treasurer for the recovery thereof in the court of common pleas for the county in which such taxes are payable; and if it be determined in said action that such taxes were wrongfully or illegally collected, for any reason going to the merits, then the court before whom the case is tried shall certify of record that the same were wrongfully collected and ought to be refunded, and thereupon the comptroller general shall issue his warrant for the refunding of the taxes so paid, which shall be paid in preference to other claims against the treasury."

The taxing power is an important attribute of the sovereign powers of the state. It is upon taxation that the state must rely to obtain means to carry on its government, and it is important that its adopted mode to enforce its taxes should be interfered with as little as possible. In South Carolina the Legislature has specifically prohibited its own courts from staying the hands of the fiscal authorities in the collection of taxes. While that statute is not binding upon this court, in its equity jurisdiction, this court will respect it, if it can do so without denying to the complainant any legal or equitable right.

Justice Field, in Dows v. City of Chicago, 11 Wall. (78 U. S.) 110, 20 L. Ed. 65, in commenting on collection of taxes by the states, says:

"No court of equity will * * * allow its injunction to issue to restrain their action, except where it may be necessary to protect the rights of

the citizen whose property is taxed, and he has no adequate remedy by the ordinary processes of the law. It must appear that the enforcement of the tax would lead to a multiplicity of suits, or produce irreparable injury, or where the property is real estate, throw a cloud upon the title of the complainant, before the aid of a court of equity can be invoked. In the cases where equity has interfered, in the absence of these circumstances, it will be found, upon examination, that the question of jurisdiction was not raised, or was waived."

Several decisions of state courts to same effect are quoted. Justice Field, continuing, says:

"The equitable powers of the court can only be invoked by the presentation of a case of equitable cognizance. There can be no such case, at least in the federal courts, where there is a plain and adequate remedy at law. And except where the special circumstances which we have mentioned exist, the party of whom an illegal tax is collected has ordinarily ample remedy, either by action against the officer making the collection or the body to whom the tax is paid. Here such remedy existed. If the tax was illegal, the plaintiff protesting against its enforcement might have had his action, after it was paid, against the officer or the city to recover back the money, or he might have prosecuted either for his damages. No irreparable injury would have followed to him from its collection. Nor would he have been compelled to resort to a multiplicity of suits to determine his rights. His entire claim might have been embraced in a single action."

Justice Moody, in the case of Boise Artesian Water Co. v. Boise City, 213 U. S. at page 281, 29 Sup. Ct. at page 427, 53 L. Ed. 796, says:

"The sum of the company's contentions is that the imposition of the license fee was illegal, unconstitutional, and void. All these contentions are open in a court of law. It is a guiding rule in equity that in such a case it will not interpose where there is a plain, adequate, and complete remedy at law. This rule at an early date was crystallized into statute form by the sixteenth section of the Judiciary Act (Revised Statutes, § 723 [Comp. St. 1913, § 1244]), which, if it has no other effect, emphasizes the rule and presses it upon the attention of courts. New York, &c., Co. v. Memphis Water Co., 107 U. S. 205, 214 [2 Sup. Ct. 279, 27 L. Ed. 484]. It is so well settled and has so often been acted upon that no authority need be cited in its support, though it must not be forgotten that the legal remedy must be as complete, practicable, and efficient as that which equity could afford. Walla Walla v. Walla Walla Water Co., 172 U. S. 1, 11 [19 Sup. Ct. 77, 43 L. Ed. 341]. A notable application of the rule in the courts of the United States has been to cases where a demand has been made to enjoin the collection of taxes or other impositions made by state authority, upon the ground that they are illegal or unconstitutional. The decisions of the state courts in cases of this kind are in conflict, and we need not examine them. It is a mere matter of choice of convenient remedy for a state to permit its courts to enjoin the collection of a state tax, because it is illegal or unconstitutional. Very different considerations arise where courts of a different, though paramount, sovereignty interpose in the same manner and for the same reasons. An examination of the decisions of this court shows that a proper reluctance to interfere by prevention with the fiscal operations of the state governments has caused it to refrain from so doing in all cases where the federal rights of the persons could otherwise be preserved unimpaired. It has been held uniformly that the illegality or unconstitutionality of a state or municipal tax or imposition is not of itself a ground for equitable relief in the courts of the United States. In such a case the aggrieved party is left to his remedy at law, when that remedy is as complete, practicable, and efficient as the remedy in equity. And the rule applies as well where the right asserted is by way of defense. Insurance Co. v. Bailey, 80 U. S. [13 Wall.] 616, 623 [20 L. Ed. 501]. In order to give equity jurisdiction there must be shown, in

addition to the illegality or unconstitutionality of the tax or imposition, other circumstances bringing the case under some recognized head of equity jurisdiction, before the remedy by injunction can be awarded. The leading case on the subject is Dows v. Chicago, 78 U. S. [11 Wall.] 108 [20 L. Ed. 65]."

Justice Holmes, in Dalton Machine Co. v. Virginia, 236 U. S. at page 701, 35 Sup. Ct. at page 480, 59 L. Ed. 797, refers to the Boise Artesian Water Co. v. Boise City Case as authority, and concludes his decree in these words:

"The appellant has an adequate remedy at law in its right to raise the constitutional question if proceedings are taken against it, or, it seems, to recover the money if it pays under protest. No special circumstances are shown, that we can notice, to take this case out of the ordinary rule. Indiana Mfg. Co. v. Koehne, 188 U. S. 681, 690 [23 Sup. Ct. 452, 47 L. Ed. 651]."

The doctrine announced in these cases is sustained by the great weight of authority. It is true that this court can reach out its strong arm and stay the fiscal authorities of South Carolina in the performance of their duty, giving as a reason that taxes are a lien on the property and a cloud upon its title; but there is no equity here that appeals to the conscience of the court with impelling force. "An examination of the decisions of the Supreme Court shows that a proper reluctance to interfere by prevention with the fiscal operations of the state government has caused it to refrain from so doing in all cases where the federal rights of the persons could otherwise be preserved unimpaired." In this case the complainant is setting up no right under the Constitution or statutes or treaties of the federal government. Its sole contention is that the state of South Carolina has by subdivision 13 of section 294 of the Civil Code of 1912 exempted its property from taxation. What could be more appropriate than to allow the courts of South Carolina to construe their own statutes with respect to taxation? The complainant can pay its taxes under protest and then bring suit against the county treasurer of Edgefield county to recover it. If the court holds that subdivision 13 of section 294 exempts the property of the complainant from taxation, it would be so certified, and the money would be refunded. There is no multiplicity of suits involved, because, if the courts of South Carolina held, in an action under section 461, that the property of the complainant is exempt from taxation, there would be no further attempt to collect taxes thereon. There would be no cloud upon the title of complainant, and no impairment of any of its legal rights. The complainant, claiming a legal right, has a full, complete, adequate, practicable, and efficient remedy at law.

For these reasons the temporary restraining order is refused.

In re ROBERTS.

In re LAMAR, TAYLOR & RILEY DRUG CO.

(District Court, N. D. Georgia, W. D. October 27, 1915.)

No. 727.

1. BANKRUPTCY ⟹165—PREFERENCES—MORTGAGE RECORDED WITHIN FOUR MONTHS.

Under the law of Georgia, by which an unrecorded chattel mortgage is void only as against lien creditors or subsequent purchasers, mortgagees, or lienholders in good faith, such a mortgage is not required to be recorded within the meaning of Bankr. Act July 1, 1898, c. 541, § 60a, 30 Stat. 562, as amended by Act Feb. 5, 1903, c. 487, § 13, 32 Stat. 799 (Comp. St. 1913, § 9644), and, if executed more than four months prior to the bankruptcy, failure to record it until within four months does not render it preferential.

[Ed. Note.—For other cases, see Bankruptcy, Cent. Dig. §§ 259, 260, 266; Dec. Dig. ⟹165.]

2. BANKRUPTCY ⟹184—VALIDITY OF LIEN—FAILURE TO RECORD MORTGAGE.

The failure of a creditor to record a chattel mortgage taken a few months before the bankruptcy of the debtor, who was a merchant, *held* not fraudulent as to subsequent creditors, where there was no agreement not to record, and the mortgagee did not have reason to suppose the debtor insolvent, or that he was purchasing goods from others on credit.

[Ed. Note.—For other cases, see Bankruptcy, Cent. Dig. §§ 275–277; Dec. Dig. ⟹184.]

In Bankruptcy. In the matter of C. D. Roberts, bankrupt. On review of order of referee allowing claims of the Lamar, Taylor & Riley Drug Company as a secured claim. Affirmed.

The statement of facts and opinion of the referee in the above-entitled case are as follows:

The question in this case is whether or not the claim of the Lamar, Taylor & Riley Drug Company against C. D. Roberts, bankrupt, should be allowed as a secured claim over the objection of the trustee in bankruptcy, on the following grounds, to wit: (1) Because the same is void under section 60, subdivisions (a) and (b), of the Bankruptcy Act, for the reason that same is a preference. (2) That said claim is based upon a transfer of property, made by said bankrupt while insolvent, to one of his creditors for the purpose of securing a pre-existing debt, and that at the time the said transfer was taken or given the creditor had reasonable cause to believe that the enforcement thereof would effect a preference. (3) That said transfer was recorded within four months next preceding the adjudication in bankruptcy of said bankrupt. (4) That it was the intention of the bankrupt, by the execution and delivery of said mortgage, to prefer one of his creditors, which said intention was known to said creditor at said time.

After notice to all parties at interest, a hearing was had on said matter before me at Cuthbert, Ga., and on the 26th day of July, 1915, I passed an order allowing said claim as a secured claim against the estate of said bankrupt, subject to the proper costs of administration. At said hearing the trustee introduced the following documentary evidence: Schedule A (2), showing the creditors holding securities, and schedule A (3), showing the creditors whose claims are unsecured. The Lamar, Taylor & Riley Drug Company introduced the following documentary evidence: Six promissory notes, all payable to the Lamar, Taylor & Riley Drug Company, and all dated March 2, 1914, and due, respectively, September 1st, $500; September 15th, $250; October 10th,

⟹For other cases see same topic & KEY-NUMBER in all Key-Numbered Digests & Indexes

$500; November 15th, $200; December 10th, $500; and January 1, 1915, $1,531.48, all bearing interest from date at 8 per cent. per annum, said notes secured by a mortgage dated March 6, 1914, given by C. D. Roberts to the Lamar, Taylor & Riley Drug Company "to secure the aforesaid notes, and all other advances and credits which may be extended to me by said Lamar, Taylor & Riley Drug Company, during one year after this date, so that the balance due after making all credits for payments will not exceed $1,000, whether evidenced by these notes or open account charged on the books of said Lamar, Taylor & Riley Drug Company, upon the following described property, to wit: All of the stock of drugs, proprietary and patent medicines, stationery, perfumes, pipes, cigars, tobacco, showcases, tables, chairs, soda fountains, apparatus, and all property of any and every kind now situated in the two stores at Shellman, Ga., known as the City Drug Store and Roberts Pharmacy. This mortgage is on goods changing in specific, and is intended to cover all other articles purchased to supply those sold in the due course of trade. It is hereby agreed that, in case of failure to pay any of said notes at maturity, all of the same shall become due at the option of the second party"—which said mortgage was duly recorded in the clerk's office of the superior court of Randolph county on September 4, 1914, in Book of Mortgages P, p. 63; also the mortgage execution, with the entry of levy made by the sheriff of Randolph county; also a statement of the account due by said C. D. Roberts, bankrupt, to the Lamar, Taylor & Riley Drug Company, for $903.23, the amount owing said Lamar, Taylor & Riley Drug Company, on open account; also the statement of assets and liabilities made by C. D. Roberts to the Lamar, Taylor & Riley Drug Company, dated January 1, 1913.

Findings of Fact.

I find that on the 6th day of March, 1914, C. D. Roberts, who was in the retail drug business at Shellman, Ga., was indebted to the Lamar, Taylor & Riley Drug Company, hereinafter called the Drug Company, in the sum of $3,531.48, for goods purchased by him from them, and that on said date Roberts, who had gone to Macon, where the said Drug Company is located, to see them with reference to his account, at their request, executed to them a mortgage to secure six notes representing his said past-due account, and to secure all other advances and claims which might be extended to him by said Lamar, Taylor & Riley Drug Company, during one year after its date, so that the balance after making all credits for payments will not exceed $1,000, which mortgage covered all of his stock of drugs, fixtures, etc., located in the two stores at Shellman, Ga., known as the City Drug Store and Roberts Pharmacy. Said mortgage provided that: "This mortgage is on goods changing in specific, and intended to cover all other articles purchased to supply those sold in due course of trade," and that, "in case of failure to pay any of said notes at maturity, all of the same shall become due at the option of the second party." After the execution of said mortgage to secure the then indebtedness of Roberts to the Drug Company, they continued to sell Roberts, during each month thereafter until September, various bills of goods on 30 days' time, all of which said monthly bills were paid, except those for July and August, which, under the provisions of the mortgage, became secured by the mortgage, and, when the mortgage was later foreclosed, it was for the amount owing on March 6, 1914, the date of the mortgage, and also for the accounts for the two months above mentioned, making a total of $4,434.71, besides interest. That said mortgage was not recorded until the 4th day of September, 1914, though there was no agreement that the same be withheld from record, and was foreclosed on October 20, 1914, in the superior court of Randolph county. That on November 6, 1914, an involuntary petition was filed against Roberts, upon which he was, on November 10, 1914, after reference, duly adjudged a bankrupt. That when Roberts gave the mortgage to the Drug Company, on March 6, 1914, he told them that he only owed other creditors about $600, and that his two stocks of goods were worth about $8,000, and that he had about $1,000 in open accounts on his books owing to him, and that the Drug Company did not consider or have reason to believe him insolvent. That when the first of the series of notes secured by the mortgage became due on September 1, 1914, it was sent

to the bank at Shellman for collection, and was returned unpaid, and thereupon, on September 3d, the Drug Company sent the mortgage to the clerk of superior court of Randolph county for record. That while the Drug Company knew that Roberts had increased his account with them by about $900, by failing to pay the July and August bills, they did not know that he had bought a considerable amount of goods from other people, but only knew that he bought from other people such articles as were needed in his trade which they did not keep in stock, and that on September 4, 1914, the date of the record of the mortgage, they had no information that Roberts was insolvent.

Conclusions of Law.

This matter arises upon the objections filed by the trustee in bankruptcy of C. D. Roberts to the allowance, as a preferred claim, of the claim of the Lamar, Taylor & Riley Drug Company, for $4,434.71 and interest, represented by the six promissory notes and an account, secured by a mortgage. The mortgage is attacked upon the grounds given in the first paragraph above.

It is essential under Bankr. Act, § 60 (a), that the mortgage sought to be set aside as a preference should be made "within four months of bankruptcy," and that "such period of four months should not expire until four months after the date of the recording or registering of the transfer, if by law such recording or registering is required"; and as the mortgage in question here was executed more than four months before bankruptcy, but was recorded within the four months period, it becomes necessary to determine whether or not, under the law of this state, mortgages are required to be recorded in order to be valid as between the parties and ordinary creditors. This question has been settled in Re Jacobson & Perrill, 29 Am. Bankr. Rep. 603, 200 Fed. 812 (District Court, Northern District of Georgia), in which it was held that:

"Under the law of Georgia, the failure to record a chattel mortgage does not render it void as between the parties or ordinary creditors, but only against lien creditors of the mortgagor, or subsequent purchasers and mortgagees or lienholders in good faith, and recording is not 'required' within the meaning of section 60(a) of the Bankruptcy Act."

And as the mortgage was recorded before the institution of the bankruptcy proceedings, it was a superior lien to that of the trustee, which does not take effect prior, at least, to the institution of said bankruptcy proceedings.

It is contended that the failure to promptly record the mortgage rendered the same void; but, having found that there was no agreement between the parties thereto that the same should be withheld from record, I think this question is controlled by the case of Bean v. Orr, 25 Am. Bankr. Rep. 400, 182 Fed. 599, 105 C. C. A. 137 (Circuit Court of Appeals, Fifth Circuit), in which it was held, with reference to a mortgage executed prior to the four months period, but recorded within said period, that the evidence failed to show that the mortgage was given with the intent to hinder, delay, and defraud creditors, and that neglecting to promptly record it was not in itself fraudulent as against other creditors.

It is further contended by counsel for the trustee that this mortgage should not be enforced against the general creditors of the bankrupt, who sold him goods after the date of the execution and delivery of the mortgage, but before its record. This same question was before the court in the case of In re Jacobson & Perrill, supra; but therein the court held that the mortgage was intentionally withheld from the record, and that its effect was to deceive creditors, and, further, that in that case some of the general creditors testified that they would not have sold the bankrupt the goods, had they known of the existence of the mortgage, while in the case at bar it is clear from an inspection of the record, and especially the testimony of Mr. Riley, the manager of the Lamar, Taylor & Riley Drug Company, that he expected and thought that Roberts was buying all of his goods from them, except such little things as they did not carry in stock, and that he did not know or have cause to believe that Roberts had increased his indebtedness to general creditors in the large amount which it appears that he owed at the date of bankruptcy. This fact is, it appears to me, borne out by the statement made by Roberts, at the time of the execution of the mortgage, that while he owed the Lamar, Taylor &

Riley Drug Company something like $3,500, he owed all other creditors only about $600, and I do not believe that the mortgage was withheld from record for a fraudulent purpose, because of the fact that at the time the same was executed, Roberts, in addition to the statement just mentioned, told the Lamar, Taylor & Riley Drug Company that he owned two stocks of goods, worth about $8,000, and that he had owing him on his books about $1,000, so that, when the indebtedness of $3,500 owing the Drug Company and the $600 owing to unsecured creditors are taken from the assets as above stated by him, he had a net worth of about $4,800, so that the Lamar, Taylor & Riley Drug Company could have had no reason to suspect that he was insolvent, and there was no evidence tending to show that any of the above facts were false.

Upon the foregoing facts I entered the order which is hereto attached, allowing the claim of the Lamar, Taylor & Riley Drug Company as a secured claim, subject to the proper costs of administration, and said questions are certified to the judge for his opinion thereon.

Yoemans & Wilkinson, of Dawson, Ga., for trustee.

Hardeman, Jones, Park & Johnston, of Macon, Ga., for claimant.

NEWMAN, District Judge. The question for determination in this case is one which has arisen in a number of cases; that is, whether the mortgage should be allowed as a secured claim.

[1] First. It appears that the mortgage was made in March, 1914, but not recorded until September, and the bankruptcy petition was filed in October. So that the recording of the mortgage was within four months of the bankruptcy, but not its execution. The question on this part of the case is whether the mortgage was one which was required to be recorded under the Bankruptcy Act, as amended, providing that:

"Where the preference consists in a transfer, such period of four months shall not expire until four months after the date of the recording or registering of the transfer, if by law such recording or registering is required."

I passed on the question as to whether or not the recording of a mortgage as against general creditors, in a case like this, was "required" in Georgia in the case of In re Jacobson & Perrill, 200 Fed. 812, relying upon the authority of our Circuit Court of Appeals in Meyer Bros. Drug Co. v. Pipkin Drug Co., 136 Fed. 396, 69 C. C. A. 240, and in Keeble v. John Deere Plow Co., 190 Fed. 1019, 111 C. C. A. 668.

The Circuit Court of Appeals in the two cases named was considering this question in some cases coming from Texas. The Texas statute (Rev. St. 1895, art. 3328), in reference to the recording of mortgages is stated by Judge Pardee, in Meyer Bros. Drug Co. v. Pipkin Drug Co., supra, as follows:

"This statute has been construed in the Supreme Court of the state of Texas to mean that an unrecorded chattel mortgage shall be void only against lien creditors of the mortgagor, or subsequent purchasers and mortgagees or lienholders in good faith; and, as between the parties to the chattel mortgage and against all ordinary creditors, the record is immaterial."

And, as I stated in that case:

"The statute of Georgia on this subject could be stated in exactly the same language."

I shall adhere to the ruling made in the Jacobson & Perrill Case.

[2] The only other question in this case requiring attention is the rights of creditors who sold goods to Roberts between the time of the

execution of the mortgage and its record. The facts relative to that in this case are not at all like the facts in the Jacobson & Perrill Case. In the Jacobson & Perrill Case the mortgagee knew that Jacobson & Perrill were buying considerable quantities of new goods—indeed, they expected them to do this when they took the mortgage—and they stood by and allowed them to do it, and then claimed that the goods so purchased came within the lien of the mortgage, although it was not recorded, and no notice was given to the sellers of goods during the period that the mortgage was withheld from record. Here I think the most that can be claimed against the mortgagee, the Lamar, Taylor & Riley Drug Company, is that they did not expect Roberts to buy very much from any establishment other than their own, and only such articles as they did not carry in stock, and for him to pay for the same when he bought them. Such is, I think, substantially what the referee finds in his opinion in the case.

On the whole, I do not feel that I would be justified in disagreeing with the referee in the conclusion he reached in this matter. Consequently his action in allowing the claim of the Lamar, Taylor & Riley Drug Company as a secured claim is sustained.

UNITED STATES v. GROVER et al.

(District Court, N. D. California, Second Division. October 27, 1915.)

No. 15,214.

1. MORTGAGES ⟹307—LIEN—TAKING OF NEW MORTGAGE IN RENEWAL.

Where a mortgage is renewed before maturity, or the evidence of the debt is changed by the substitution of new notes therefor, or for such portion thereof as may remain unpaid, the lien of the mortgage is not lost or affected, even though it is discharged of record and a new mortgage is taken on the same property, unless the circumstances of the transaction disclose clearly that such was the intention of the parties. Nor does including in the new mortgage an additional indebtedness not covered by the first discharge the lien of the old mortgage, so far as the indebtedness secured thereby remains unpaid, unless such be the purpose of the parties.

[Ed. Note.—For other cases, see Mortgages, Cent. Dig. §§ 864, 897; Dec. Dig. ⟹307.]

2. NOVATION ⟹7, 13—NATURE AND REQUISITES—INTENTION OF PARTIES.

The question whether a debt has been novated by a particular transaction is ordinarily one of fact, dependent entirely upon the intention of the parties, and it can only be predicated on the terms of a written instrument, where they are so plain and explicit as to leave no doubt of their construction, when it may be treated as a question of law.

[Ed. Note.—For other cases, see Novation, Cent. Dig. §§ 7, 13; Dec. Dig. ⟹7, 13.]

3. PUBLIC LANDS ⟹120—SUIT FOR CANCELLATION OF PATENT—RIGHTS OF BONA FIDE MORTGAGEE.

A mortgage of land for which the mortgagor holds a final receipt from the United States, though executed before the issuance of patent, if taken in good faith and for value, protects the holder as a bona fide purchaser,

and is superior in equity to the right of the government to a cancellation of the patent for fraud of the patentee.

[Ed. Note.—For other cases, see Public Lands, Cent. Dig. §§ 332–335; Dec. Dig. ⚷120.]

In Equity. Suit by the United States against Harry M. Grover and William Barklage. On exceptions to master's report. Exceptions sustained.

John W. Preston, U. S. Atty., of San Francisco, Cal.
Henry M. Owens, of San Francisco, Cal., for defendants.

VAN FLEET, District Judge. This is a bill by the government tc cancel the patent to a parcel of public land. The defendant William Barklage held a mortgage on the premises, executed by Grover, the patentee, after receipt of final certificate, but before patent, and he filed an answer in which he set up his rights under his mortgage, claiming as an innocent purchaser. He died pending the suit and before trial; but the government by bill of revivor brought in those succeeding to his rights, and made them defendants. After the appointment of Barklage's executors, the latter, who were his devisees as well, made an arrangement with Grover whereby they formally canceled the Barklage mortgage, which was soon to expire, and took a new one in their own names on the same property. The Barklage mortgage was for $2,000, with interest at 8 per cent. The one to the devisees was for a balance of $1,375 still unpaid on the former mortgage, the sum of $276 due on another note of Grover, previously unsecured, and an item for merchandise, making the principal of the second mortgage $1,650, with interest fixed at 7 per cent. This transaction was had before the trial. Thereafter the cause was, by consent of the parties, sent to the master to take the evidence and report his findings and conclusions thereon.

The master found: (1) Fraud on the part of Grover, justifying cancellation of the patent; (2) that the mortgage to Barklage was for value, and taken in good faith, without knowledge of Grover's fraud, and that Barklage, at the time of his death, was entitled to be protected in the suit as an innocent purchaser for value; but (3) that the subsequent transaction between the devisees of Barklage and Grover, resulting in the second mortgage, extinguished the security of the first mortgage in its entirety—that is, that the mortgage to the devisees was not a renewal of the prior mortgage, but a new obligation, by which the rights of the government could in no respect be prejudiced; and he concluded that the plaintiff was entitled to a decree canceling the patent as against all the defendants. This holding of the master as to the character and effect of the mortgage to the devisees is made the subject of an exception by those defendants and gives rise to the only question in the case calling for special notice.

[1] The contention of the devisees is that the evidence does not warrant the construction put by the master upon the effect of the new mortgage; but that, to the extent the latter mortgage covers the unpaid portion of the debt secured by the prior mortgage, they are enti-

tled to have it treated as a renewal and continuation of that security, with the same protection as a prior equity, as if the first had never been canceled. The record does not disclose any controversy in the evidence as to the purpose and intent of the parties to this new mortgage; that is, so far as their intent could govern, it was evidently not their desire or purpose to abandon or waive their security, or forego their equity in the land, but to avail themselves of it, and that they supposed in the course they took they were accomplishing that purpose. The conclusion of the master is, therefore, not to be regarded as if based on facts found from conflicting evidence, but as a mere deduction by him of what he deemed the legal effect of facts as to which there was no dispute. The question is so treated by him in discussing the effect of the transaction. In his report, which is in the form of an opinion, he thus states the reasons that actuated him:

"If this is a new mortgage, it is, of course, clear that the defendants are not purchasers for value without notice. This suit was then pending and operated as notice. It is contended by the defendants, however, that it was a renewal of the former mortgage to William Barklage, and that, so far as it represented an amount due on that mortgage, they are entitled to stand in his shoes. In the first place, I am clear that it is not a renewal of the old mortgage, but a new mortgage. The parties are different, the amount is different, made up as it is of the portion still remaining due on the old mortgage plus an amount represented by a note for $276 previously secured. The rate of interest is different, being 8 per cent. in the old mortgage, and 7 per cent. in the new, and the security differs slightly, in that the second mortgage includes a sawmill and machinery not included in the first mortgage. The language of the decree of distribution speaks of a settlement; in other words, it is a novation. The prior obligation was discharged and a new one created to take its place, and taken with full notice of the claims of the United States."

Are these considerations such as to support the conclusion of the master? It seems to me that they are lacking in most essential respects. That equity ignores mere form and looks to substance, and will ever seek to ascertain and carry out the intent of the parties, if compatible with its principles, is axiomatic. Applying these principles to the present case, it is well settled that, where a mortgage is renewed before maturity, or the evidence of the debt is changed by the substitution of new notes therefor, or such portion thereof as may remain unpaid, the lien of the mortgage is not lost or affected, unless the circumstances of the transaction disclose clearly that it was the intention of the parties to create a new security and treat the old as canceled. Dingman v. Randall, 13 Cal. 512; Bond v. Liverpool Insurance Co., 106 Ill. 654; Security Co. v. Hirsch, 96 Ala. 232, 11 South. 63. And the fact of entering satisfaction of the existing mortgage when taking a new one, if the latter be designed by the parties as a mere continuation of the first, when the two acts are a part of the same transaction, does not operate as an extinguishment of the mortgage, but will be regarded as a renewal thereof, and not as abandoning the lien and letting in intervening equities. Dillon v. Byrne, 5 Cal. 455; Roberts v. Doan, 180 Ill. 187, 54 N. E. 207; Higman v. Humes, 127 Ala. 404, 30 South. 733; Eggeman v. Eggeman, 37 Mich. 436.

So long as the same debt, or some part of it, subsists, the presumption ordinarily is that the new mortgage is intended as a renewal of the old,

and a continuance of the same security. Sloan v. Rice, 41 Iowa, 465; Markell v. Eichelberger, 12 Md. 78; McDonald v. McDonald, 16 Vt. 630. Nor does the including in the new mortgage of an additional indebtedness not covered by the first discharge the lien of the old mortgage, so far as the indebtedness secured thereby remains unpaid, unless such be the purpose of the parties. London & S. F. Bank v. Bandmann, 120 Cal. 220, 52 Pac. 583, 65 Am. St. Rep. 179; De Cottes v. Jeffers, 7 Fla. 284. And very clearly the difference in the rate of interest between the two mortgages where, as here, the rate is less in the last mortgage than in the first, cannot be regarded as material to indicate an intention to create a new obligation and abandon the security of the old. Kern v. Hotaling, 27 Or. 205, 40 Pac. 168, 50 Am. St. Rep. 714. So far as the difference in the parties to the two instruments is concerned, to which the master refers, manifestly that cannot be regarded as a material circumstance supporting his conclusion, where, as here, the mortgagees in the second mortgage are the successors in interest and privies in estate with the one who held the first.

As to the supposed difference in the security or property covered by the second mortgage, suggested by the master, it is a misapprehension. The land described in both instruments is the same, and the record indicates quite clearly that the lumber mill described in the second mortgage was not on the land when the first mortgage was given, being built subsequently; but the land being the same, when erected the structure would become a part of the realty, and in the absence of special exemption would go to feed the security afforded by the land, although not described. Improvements which are part of the realty need not be referred to in deeds or mortgages, unless they are to be exempted; they go with the land. So the security afforded by the second mortgage is not different from that of the first.

[2] The master adverts to the language of the decree of distribution of the Barklage estate, referring to the transaction resulting in the taking of the new mortgage as a "settlement," and makes this the basis of the suggestion that it was a novation, "The prior obligation was discharged and a new one created to take its place," as he puts it. In the first place, the recital in question was wholly unessential to any right carried by the decree, and was binding upon no one; but, in the next place, if it were the recital of a jurisdictional fact, it would be insufficient as the basis of a finding of novation. The question whether a debt has been novated by a particular transaction is ordinarily one of fact, dependent entirely upon the intention of the parties (Ceballos v. Munson S. S. Line, 93 App. Div. 593, 87 N. Y. Supp. 811; Trudeau v. Poutre, 165 Mass. 81, 42 N. E. 508); and it can only be predicated of the terms of a written instrument, where they are so plain and explicit as to leave no doubt of their construction, when it may be treated as a question of law (Trudeau v. Poutre, supra; Sinclair v. Richardson, 12 Vt. 33).

For these reasons I am of opinion that the finding and conclusion of the master as to the effect of the new mortgage to the devisees of Barklage cannot be sustained, but that the latter are entitled to protection against the forfeiture of their equity to the extent that their mortgage

secures the unliquidated portion of the debt due their testator—$1,375, with interest.

[3] It is urged in the brief of the government that, whether the ruling of the master, just considered, be sustained or not, the government is, nevertheless, entitled to a decree. This contention is based upon the proposition in substance that the mortgage to Barklage, having been executed prior to patent, carried no greater title or equity than that held by the mortgagor at the time, and therefore, however innocently taken, created rights subordinate to the equity of the United States, which held the legal title at the time of its execution—a doctrine which would seem to find support in some of the cases. But it is sufficient to say without elaboration that I regard the view upheld by the master as not only in accord with correct principles of equity, but as supported by the weight of authority. 2 Pomeroy's Eq. Jurisp. § 738; Marshall v. Farmers' Bank, 115 Cal. 330, 42 Pac. 418, 47 Pac. 52; United States v. Clark, 200 U. S. 601, 26 Sup. Ct. 340, 50 L. Ed. 613; United States v. Detroit Lumber Co., 200 U. S. 321, 26 Sup. Ct. 282, 50 L. Ed. 499; United States v. Kennedy, 206 Fed. 47, 124 C. C. A. 181.

In accordance with the views above expressed, the exception to the master's report above discussed is sustained.

BILLINGS v. CHARLES MILLAR & SON CO.

(District Court, N. D. New York. October 30, 1915.)

1. BANKRUPTCY ⟹299—ACTION BY TRUSTEE—PARTIES.

A trustee in bankruptcy, suing for money paid by bankrupt without consideration to a corporation, should, as a protection, in case of the corporation becoming insolvent, join as defendants all those shown by the complaint to be personally liable.

[Ed. Note.—For other cases, see Bankruptcy, Cent. Dig. § 448; Dec. Dig. ⟹299.]

2. BANKRUPTCY ⟹299—ACTION BY TRUSTEE—PARTIES—PLEADING—KNOWINGLY.

The complaint of the trustee in bankruptcy of a corporation to recover money paid by it to defendant corporation, showing that the same persons constituted a majority of the directors of each corporation, and alleging that they, acting for bankrupt, caused it to pay large sums to defendant without consideration, "knowing" the facts, shows a personal liability of the directors as regards the propriety of joining them as defendants; an intent to defraud being presumed from the doing "knowingly" of the wrongful act resulting in the injury to bankrupt.

[Ed. Note.—For other cases, see Bankruptcy, Cent. Dig. § 448; Dec. Dig. ⟹299.]

In Equity. Suit by E. Ross Billings, as trustee in bankruptcy of the Utica Pipe Foundry Company, against Charles Millar & Son Company. Heard on rule for order to bring in additional defendants. Order granted.

This is a suit in equity for an accounting by the defendant of the moneys alleged to have been paid by the bankrupt company through the action of its directors to the defendant company without any substantial consideration,

and known to have been paid without any substantial consideration, and as compensation for alleged services not rendered, or, if rendered, of little value, or as commissions on sales not made, and also for a judgment for the amount so illegally or improperly paid. This matter is now before this court on a rule to show cause why an order should not be made directing the plaintiff, as trustee in bankruptcy of the company making such payments, to bring in as defendants herein the individual directors common to both the bankrupt company making the payments and the defendant company receiving same. The claim is that the bill of complaint shows and states a cause of action, not only against the defendant company, but against the directors of both companies individually.

Edw. H. Letchworth and Jos. G. Dudley, both of Buffalo, N. Y., for the motion.

Lynch, Willis & Titus, of Utica, N. Y., opposed.

RAY, District Judge (after stating the facts as above). The Utica Pipe Foundry Company is the bankrupt, and the Charles Millar & Son Company is the defendant, and for the purposes of this motion it must be conceded that since January 1, 1908, the board of directors of the bankrupt company has consisted of five members, and that during all said time a majority of such directors have been also directors in the defendant company and interested financially therein. The bill of complaint also alleges:

"IV. That from time to time since said January 1, 1908, said directors common to both companies, acting for said bankrupt company, have caused it to pay to the defendant many thousands of dollars, the exact amount of which is unknown to the plaintiff, without any substantial consideration, and knowing that said payments were made without any substantial consideration, but for services which in fact were not rendered, or, so far as any services were rendered, were of little value, or were made as commissions for sales which were not made by said defendant, but were made by the employés of said bankrupt company itself.

"V. That the defendant received said money knowing that it was so paid without any substantial consideration, knowing that it was paid under the direction of said common directors and against the wishes of directors and stockholders of said bankrupt company who were not interested in the defendant, and knowing the financial condition of said bankrupt company at the time said payments were so made and received."

Does this complaint state facts which, if proved, constitute a cause of action against the directors of said corporations individually who had the knowledge alleged? If so, I think such directors should be brought in and made parties defendant, as it is the duty of the trustee in bankruptcy to seek to recover assets belonging to the estate he represents from every source available and every party liable, when payment or delivery is not voluntarily made and the legal proceedings necessary promise results; that is, a substantial benefit to the estate. This court has many times held that it is not the duty of a trustee in bankruptcy to institute legal proceedings, expensive in their very nature, for the sake of securing a small recovery, which evidently would not cover the expense of the litigation, or for the purpose of having a legal proposition determined, which, when settled, while of general interest, may be, would not result in benefit to the estate. Here it is claimed that, while the defendant corporation is now apparently solvent, it may not be solvent at the end of the litigation, and

that the directors claimed by creditors to be liable are solvent, and that the creditors of the bankrupt corporation are entitled to have these solvent directors made parties and their liability determined, inasmuch as the complaint states a cause of action against them. Questions of the propriety and of expediency of making them parties defendant, if on the allegation made they are liable, would seem to be eliminated, and the question reduced to the proposition: Does this complaint state a cause of action against such directors? If not, even if there exists a ground of liability on their part, the trustee should seek to enforce it in some other action.

The gist of the charge against some of the directors common to both corporations seems to be that the majority of the directors in the bankrupt corporation, in opposition to the wishes of their codirectors, caused the bankrupt corporation to pay to this defendant corporation with the knowledge of its directors "many thousands of dollars * * * without any substantial consideration and *knowing* that said payments were made without any substantial consideration, but for services which in fact were not rendered, or so far as any services were rendered were of little value," or were made as compensation by way of commissions for sales which were not made by said defendant, but were made by the employés of the bankrupt corporation. This is an allegation equivalent to saying that such directors of the one corporation knowingly so paid such sums to the other corporation, and that the directors of the latter, or defendant corporation, knowingly—that is, with knowledge of the facts—so received such sums of money belonging to the now bankrupt corporation. There is no direct charge or allegation of willful fraud or wrongdoing and no direct allegation of corrupt intent. It is well settled that the directors of a corporation are not liable for mere errors of judgment, when they act without corrupt intent and in good faith, and are fairly competent to discharge the duties of the position, unless the acts be unlawful or ultra vires. People v. Equitable Life Assurance Society of the U. S., 124 App. Div. 714, 731, and cases cited at page 731, 109 N. Y. Supp. 453; Cass v. Realty Securities Co. et al., 148 App. Div. 96, 99, 132 N. Y. Supp. 1074; Holmes, as Trustee, v. St. Joseph Lead Co. et al., 168 App. Div. 688, 693, 154 N. Y. Supp. 513.

But if two corporations have the same directors controlling each corporation, and such directors, or a majority of them, acting for one of such companies, causes it to pay many thousands of dollars of its own money to the other company without substantial consideration therefor, and *"knowing"* that such payments were made without any substantial consideration, but in payment for services not rendered at all, or, if any were rendered, of little value, or as commissions for sales not made by the defendant corporation, but by the now bankrupt corporation which made the payment, do we have the case of an error of judgment, and absence of corrupt or bad intent, and action had in good faith, and where such payments were lawful and within the powers of the corporation making such payments? Is it not true that the property and money of a corporation is held by its

directors as a trust fund, or in trust, in equity, for the carrying on of its legitimate and lawful business enterprises, the payment of its just debts and obligations, and the balance to its stockholders when wound up? Can it be that the majority of the directors in two corporations, and being the controlling directors of both, may, against the wishes of some of the directors and stockholders of the one making the payments, *cause* to be paid to the other many thousands of dollars of its money or funds, *knowing* that such payments were made without any substantial consideration, but for services not rendered, or of little value, or for commissions on sales not made by it, but by the corporation making the payments, without incurring personal liability? To create personal liability is it not all-sufficient that such acts as the complaint alleges were done by the directors *knowing* the facts stated? Would it add anything to the complaint to allege that such payments were not only made or caused to be made by them, knowing the absence of consideration therefor and knowing that they were made for services not performed, etc., but fraudulently made, and in bad faith, and with intent to injure? Is it not true that intelligent men are presumed to intend the natural and known consequences of their acts *knowingly* done? Agnew v. United States, 165 U. S. 36, 53, 17 Sup. Ct. 235, 242 (41 L. Ed. 624) where the court charged:

"The intent to injure or defraud is presumed, when the unlawful act, which results in loss or injury, is proved to have been *knowingly* committed."

The court said this was unexceptionable as matter of law. In this case loss is alleged, for the mere fact that thousands of dollars were paid out without consideration, and for services not performed, or commissions on sales not made, shows that the bankrupt company suffered injury in the amount so paid. It can hardly be contended that to pay out the money of a corporation for services not rendered, knowingly, is not as to such corporation and its directors a wrongful act. Such payments made knowing the facts are wrongful, even if not criminal. Would not such payments injure and defraud the corporation making them and its creditors and stockholders?

I am of the opinion that, in view of the allegations of the complaint, the directors of the two corporations should be brought in and made parties defendant under such allegations as the plaintiff, in view of all his information, is advised he is justified in making, whereupon the sufficiency of the complaint can be tested by demurrer or otherwise. In view of the complaint and moving affidavits, and the trust relation of the plaintiff to the creditors of the bankrupt corporation, I think this should be done to protect him from the possible charge of willful neglect of duty to the injury of the creditors and possible personal liability. When these directors are brought in, and the complaint has been properly amended, or a supplemental complaint filed, its sufficiency can be tested by proper proceedings. The court does not indicate or decide that the plaintiff must charge facts creating a personal liability on the part of such directors.

There will be an order bringing in such directors as parties defendant, and for an amended or supplemental complaint.

UNITED STATES v. LELES.

(District Court, N. D. California, Second Division. November 1, 1915.)

No. 180.

1. ALIENS ⟹71½, New, vol. 7 Key-No. Series—NATURALIZATION—CANCELLATION OF CERTIFICATE.

Under Naturalization Act June 29, 1906, c. 3592, § 15, 34 Stat. 601 (Comp. St. 1913, § 4374), declaring that it shall be the duty of the United States attorneys for the respective districts, upon affidavit showing good cause therefor, to institute proceedings in any court, having jurisdiction to naturalize aliens, in the district in which the naturalized citizen may reside, for the purpose of setting aside and canceling the certificate of citizenship on the ground of fraud, or on the ground that such disputed citizenship was illegally procured, the purpose of the affidavit is merely to furnish an authentic source or means through which the United States attorneys may receive information, and is not intended as a pleading; hence an affidavit stating that affiant was informed and believed that defendant was not qualified to become a naturalized citizen, in that he was not a person of good moral character for five years preceding his application for naturalization, and that he procured naturalization in violation of law, is sufficient basis for a proceeding, though not stating the facts with exactitude.

2. ALIENS ⟹71½, New, vol. 7 Key-No. Series—NATURALIZATION—CANCELLATION OF CERTIFICATE.

An affidavit, which was the foundation of a proceeding to cancel a naturalization certificate and averred that the affiant was informed and believed that defendant had procured naturalization in an illegal manner and in violation of Naturalization Act, § 9 (Comp. St. 1913, § 4368), in that the certificate was ordered on the testimony of witnesses, who were not under oath, sufficiently charges the illegal procurement of the certificate, though the averments that defendant was not entitled to naturalization, because he was not a person of good moral character for the five years preceding his application, were not sufficient to base a charge of fraud.

3. ALIENS ⟹71½, New, vol. 7 Key-No. Series—NATURALIZATION—CANCELLATION OF CERTIFICATE.

Under Naturalization Act, § 15, providing for the institution of proceedings for the cancellation of naturalization certificates when an affidavit showing good cause therefor shall be filed, the affidavit may be made on information and belief.

4. ALIENS ⟹71½, New, vol. 7 Key-No. Series—NATURALIZATION—NATURE OF PROCEEDINGS.

A certificate of naturalization is a public grant of political privileges, and, while partaking of the nature of a judgment, the sovereign power may provide for its cancellation, whenever procured unlawfully or fraudulently; hence a proceeding under Naturalization Act, § 15, to cancel a certificate, cannot be defeated on the ground that the alleged invalidity consisted merely of irregularities, which could be corrected on appeal.

Proceeding by the United States against John Leles to cancel a certificate of naturalization issued to defendant. On motion to dismiss. Motion denied.

John W. Preston, U. S. Atty., of San Francisco, Cal.
Frank A. Duryea, of San Francisco, Cal., for defendant.

⟹For other cases see same topic & KEY-NUMBER in all Key-Numbered Digests & Indexes

VAN FLEET, District Judge. The United States attorney, having filed herein a petition or complaint, under section 15 of the Naturalization Act of 1906 (Act June 29, 1906, c. 3592, 34 Stat. p. 596 [Comp. St. 1913, § 4374]), to cancel a certificate of naturalization issued to the defendant, John Leles, on the ground that it was illegally and fraudulently procured to be issued, the defendant has moved to dismiss on the ground that the complaint does not state facts sufficient to constitute a cause of action. The motion proceeds upon the theory that the proceeding is equitable in character, and that such motion, rather than a demurrer, is the proper method to test the sufficiency of the pleading. As this theory is not challenged by the plaintiff, its correctness may, without deciding, be assumed, since the motion raises the same question as would arise under a general demurrer.

[1] The main attack is directed to the sufficiency of the affidavit lodged with the United States attorney, which is attached to the complaint as an exhibit, it being treated by the defendant as an essential feature of the pleading and its sufficiency as jurisdictional; the objection being (1) that it does not state facts sufficient to warrant the bringing of the proceeding, and (2) that it is insufficient, because based upon information and belief, and not the personal knowledge of the affiant.

In the first place, I do not regard the affidavit as jurisdictional in any such extreme sense as that contended for, and am not prepared to say that it furnishes the only competent basis for bringing such an action. But, treating it as a feature of the pleading to which it is attached, I think it not open to the objections urged. Section 15 of the act, which alone refers to the affidavit, or indicates its purpose or function, provides:

> "That it shall be the duty of the United States district attorneys for the respective districts, upon affidavit showing good cause therefor, to institute proceedings in any court having jurisdiction to naturalize aliens in the judicial district in which the naturalized citizen may reside at the time of bringing the suit, for the purpose of setting aside and canceling the certificate of citizenship on the ground of fraud or on the ground that such certificate of citizenship was illegally procured."

The sole purpose apparently of the affidavit is to furnish an authentic source or means through which the United States attorney of the district may receive information upon which he may rely, of a violation of the statute. If the disclosures of the affidavit are such as to show "good cause"—that is, facts which, if sustained by proof, would afford ground for revoking the grant of citizenship involved, either for fraud or illegality—it is made his duty to proceed and institute proceedings to have the validity of the grant judicially investigated and determined. When it has accomplished this purpose of putting the wheels of justice in motion, the affidavit would seem to have fulfilled its office, and so far as anything appearing in the act to the contrary, becomes functionless. It is obviously not intended to serve as a pleading, since, in requiring a "suit" to be brought, the statute contemplates the filing of a formal complaint. Not being a pleading, it need not state its contents with the exactitude of one, but, like any affidavit, the form of which is not prescribed, is sufficient if the substantive matter

required be presented, however informally or inartificially stated. The affidavit here involved would seem to measure up to these requirements. After the preliminary recitals the material portions are these:

"The affiant further states that he is informed and believes that the said John Leles was not qualified to become a naturalized citizen of the United States, in that he was not a person of good moral character for the five years immediately preceding the date of his application for naturalization in the above referred to court.

"The affiant further states that he is informed and believes that the said John Leles procured naturalization in an illegal manner and in violation of section 9 of the act of June 29, 1906 (34 Stat. part 1, p. 596), in this respect, to wit, that the court ordered, adjudged, and decreed the said John Leles a citizen of the United States upon the testimony of witnesses who were not examined under oath in open court, before the court, and in the presence of the court, nor was their testimony taken by deposition in the manner prescribed in section 10 of the act of June 29, 1906 (34 Stat. part 1, p. 596)."

[2] Passing the question whether these statements are sufficient upon which to base a charge of fraud in procuring the certificate, they clearly, in my judgment, present a case showing such a departure from the requirements of the statute, as to the mode of procedure, as to make a case of a certificate "illegally procured." If it disclose either ground, it is sufficient. Section 15, supra; U. S. v. Nisbet (D. C.) 168 Fed. 1006; U. S. v. Simon (C. C.) 170 Fed. 680; U. S. v. Meyer, Id., 982; U. S. v. Plaistow (D. C.) 189 Fed. 1006. As stated by Judge Hanford in the Nisbet Case:

"The ninth section of the act of Congress above referred to, under which the petition for naturalization was filed, is specific and mandatory in requiring that the hearing should be in open court, and that the applicant and witnesses should be examined under oath 'before the court and in the presence of the court'; and, except as provided in the tenth section, the court was not authorized to receive or consider evidence taken by depositions out of the presence of the court. Without the depositions, there was a lack of evidence to establish the facts necessary to entitle the defendant to become a naturalized citizen of the United States. The manifest intention of Congress, in the enactment of the naturalization law of 1906, was to prescribe rigid rules to be observed by the courts in naturalization proceedings and to correct the abuse of laxity in such proceedings. Therefore a court may not, in the exercise of assumed discretionary power, admit an alien to citizenship who has failed to establish his right by the kind of evidence which the statute demands."

This would seem to be a correct construction of the act, and the other cases cited will be found to be in harmony with that view. The suggestion in United States v. Luria (D. C.) 184 Fed. 643, imputing a somewhat different meaning and effect to the phrase "illegally procured," was made in a case where that feature of the act was not involved, and what is there said on the subject of its meaning must therefore be regarded as obiter.

[3] Nor do I perceive any good reason why the facts stated in an affidavit of this character may not be made on information and belief; the statute being silent upon the subject, and the proceeding being strictly civil, and not criminal. The provision requiring the affidavit must have a reasonable construction, that will enable it to have application to the varying circumstances under which it may be desirable

to invoke it. In the very nature of things, many instances are likely to arise where, although there is good reason to believe the statute has been violated, the agent making the investigation and swearing to the affidavit is without personal knowledge of the facts, and there is no one having such knowledge willing to be sworn. The statute would prove impotent indeed if, in such a case, it could not be put in motion for want of some one with personal knowledge of the facts constituting the particular fraud or illegality. As suggested in Leigh v. Green, 64 Neb. 533, 90 N. W. 255, 101 Am. St. Rep. 592:

"Where a showing by affidavit is required as to facts which are necessarily matters of information and belief, an affidavit on information and belief ought to suffice. The statute should receive a construction in accordance with common sense. It was not intended to require perjury, and, as it requires affidavits as to matters involving legal opinions and conclusions of law and fact, it must contemplate that such affidavit will be made upon the only basis on which such opinions and conclusions can be reached."

This language is peculiarly applicable to the character of facts required to be inquired into under this statute for the information of the district attorney. They are, in their very nature, of a character of which personal knowledge may not readily be had, and will frequently depend for their value upon their legal effect. See, also, Smith v. Collis, 42 Mont. 350, 112 Pac. 1070, Ann. Cas. 1912A, 1158; 2 Corpus Juris, § 87, p. 355, and cases cited.

[4] It is further urged that the complaint discloses upon its face that the matters counted upon as the basis of the alleged invalidity of the defendant's certificate of naturalization are in the nature merely of irregularities in the proceedings of the court, which may only be corrected on appeal, and, further, that the order of the court granting naturalization is in the nature of a final judgment, which likewise may be attacked only by direct appeal therefrom, and is not open to collateral attack. But these contentions are fully met and negatived by the principles announced in Johannessen v. U. S., 225 U. S. 227, 238, 32 Sup. Ct. 613, 615 (56 L. Ed. 1066) where it is held that an adjudication like that here involved, while in some respects partaking of the nature of a judgment, "is in its essence an instrument granting political privileges, and open, like other public grants, to be revoked if and when it shall be found to be unlawfully or fraudulently procured," and that "the act in effect provides for a new form of judicial review of a question that is in form, but not in substance, concluded by the previous record, and under conditions affording to the party whose rights are brought into question full opportunity to be heard," and it is held that the act is, in this respect, a proper exertion of the legislative will.

The motion to dismiss is denied.

UNITED PRESS ASS'NS v. NATIONAL NEWSPAPERS' ASS'N.

(District Court, D. Colorado. September 6, 1915.)

No. 6111.

1. CONTRACTS ⟹313—ANTICIPATORY BREACH—RENUNCIATION.

A renunciation of the obligations of a contract by one of the parties must be unequivocal, and of the entire contract, to constitute an anticipatory breach, and must be accepted by the other party, to render the breach actionable as a basis for the recovery of damages.

[Ed. Note.—For other cases, see Contracts, Cent. Dig. § 1279; Dec. Dig. ⟹313.]

2. DAMAGES ⟹125—BREACH OF CONTRACT—FAILURE TO PAY INSTALLMENTS DUE—FUTURE PROFITS.

Under a contract by plaintiff to furnish to defendant news reports for a daily paper for a term of years, to be paid for weekly in advance, the failure of defendant to make the weekly payments after part performance was not such a breach of the contract in its entirety in a legal sense as to entitle plaintiff, on discontinuance of the service, to recover as damages future profits it might have made during the remainder of the term, but it might, at its election, terminate the contract and recover for past service, or continue performance and recover therefor.

[Ed. Note.—For other cases, see Damages, Cent. Dig. §§ 339–343; Dec. Dig. ⟹125.]

At Law. Action by the United Press Associations against the National Newspapers' Association. Judgment for plaintiff for part of claim.

Tyson Dines, Jr., of Denver, Colo., and Glendy B. Arnold, of St. Louis, Mo., for plaintiff.

Jno. T. Bottom, of Denver, Colo., and Frank M. Lowe, of Kansas City, Mo., for defendant.

LEWIS, District Judge. The plaintiff is a New York corporation; its business is the gathering of news throughout the United States and other countries, preparing news reports thereon and selling said reports, with the privilege of publishing the same, to newspaper publishers throughout the United States.

The defendant is a Colorado corporation, and owns and publishes the Kansas City Post at Kansas City, Missouri.

In 1909 plaintiff and defendant entered into a written contract by which the plaintiff agreed to furnish and the defendant agreed to take for its newspaper at Kansas City the Full Day and Saturday Night news reports at a named consideration to be paid weekly in advance. The reports were to be brought into Kansas City and delivered over telegraph or telephone lines, and the defendant further bound itself to provide a suitable room in the office of the Kansas City Post for the plaintiff's operator, and also to furnish to the plaintiff free of charge the local news which might be gathered by the defendant within twenty-five miles of said office.

The life of the contract extended to November 1, 1914. The contract was executed on both sides to the mutual satisfaction of the

parties, barring an occasional complaint by each, until the 7th day of February, 1911. On that day the defendant wired Mr. Lee, plaintiff's vice-president, as follows:

"We desire to notify you that we do not find the United Press service satisfactory nor according to your representations to us. You will therefore discontinue the daily service after this week. We would like to contract with you for your Saturday Night service alone."

On the same day Mr. Lee replied, expressing surprise at the notice and saying, "We feel that your contract obligations should be fulfilled;" that he believed the service valuable to the Post and to discontinue would represent a serious loss to the plaintiff. On February 11, 1911, F. G. Bonfils, acting for the defendant, notified the plaintiff's local agent, who had charge of the plaintiff's office in the building and rooms where the Post was printed, that the defendant had determined that it would no longer take the plaintiff's day service; that it would like to make a new arrangement by which the plaintiff would furnish the defendant the night service (Saturdays), but that if the new arrangement could not be made plaintiff would have to vacate its office with the Post, concluding:

"We request a definite and positive answer, and would ask that you take time to obtain such answer in full from your company and, until that time, the matter will be left open."

On February 14, 1911, Mr. Lee for the plaintiff wrote Mr. Bonfils, representing the defendant, acknowledging receipt of Mr. Bonfils' letter of the 11th, addressed to the local agent at Kansas City. Mr. Lee again expressed surprise at the attitude of the defendant, and refers to an interview which he had recently had with the manager of the Post, in which it had been suggested that the defendant had expressed a desire to discontinue the plaintiff's service, and says that the plaintiff does "not feel justified in altering the terms of our agreement"; urges that the agreement be kept, points out the advantages to both parties in keeping it, and closes:

"If you can suggest some more equitable adjustment of the matter, we will, of course, be pleased to give it every consideration."

The controversy was then dropped. The plaintiff's agent remained at his office in the Post and received and delivered to the defendant news reports sent by the plaintiff, and the defendant gave the plaintiff's agent at the Post access to the local news which it had gathered. But the defendant did not make the weekly payments stipulated for in the contract. While matters were in this condition and on March 10th, 1911, Mr. Lee, who was then at Kansas City, sent a letter on the part of the plaintiff to the defendant in which he called attention to the clause of the contract requiring the weekly payments to be made in advance, stating that the defendant was then in arrears for five weeks ($875), ending the next day,

"and we notify you that unless arrearages are paid up and your weekly payments in advance begun on March 13th, 1911, we will consider your default as a breach by you of the contract, and will proceed to collect the amount then owing for service actually rendered, and the damages accruing to us on account of the failure on your part to carry out the contract."

The arrearages were not paid as demanded, and on March 13th, the plaintiff gave up its office with the Post, took its receiving agent away and took out its facilities for receiving and delivering to the Post its news reports.

Thereafter on March 22, 1913, plaintiff brought this action to recover the $875 and damages claimed to have accrued to it for the alleged breach of the contract on the part of the defendant. The defendant's answer admits the indebtedness of $875 and the plaintiff is, of course, entitled to a judgment for that amount without more; but the defendant denies that it broke the contract; alleges that the service rendered by the plaintiff was poor and inefficient and not in accord with what it conceived was the obligation of the plaintiff under the contract, and then alleges:

"That notwithstanding said frequent complaints, said failure on the part of plaintiff to comply with the terms of its contract continued until on or about the 11th day of March, 1911, when plaintiff surrendered and abandoned the contract sued on and discontinued its service to defendant of both day and Saturday night service, removed its wires and operator from the office of this defendant, and thus terminating by its own unlawful acts the contract upon which the petition in this cause is founded."

The first question then for consideration under the pleadings and proof is whether the conduct of the defendant was such as to operate as a breach of the contract on its part and thus constitute a basis for an action for damages.

[1] 1. There is no doubt that the defendant's telegram of February 7th, and letter of February 11th, to the plaintiff were declarations of renunciation on its part, and if the plaintiff had accepted them as such they would have been equivalent, for the purposes in hand, to a breach by the defendant; for an accepted renunciation operates as a breach. No man can complain if he is taken at his word. But the plaintiff did not accept the renunciation. It entered into a discussion as to the advisability for such action from the standpoint of each of the parties; it continued to render the services required of it under the contract for more than a month thereafter, and accepted performance, in part, on the part of the defendant. A renunciation of the obligations of a contract by one of the parties must be unequivocal and of the contract and its obligations in its entirety, in order to operate as an anticipatory breach. When that has been done the other party has an option open to him which he must exercise before he is entitled to maintain an action for damages as for breach of the contract; i. e., he must accept the renunciation, and then he can sue. If he does not desire to take his adversary at his word and accept the renunciation he may treat it as inoperative and keep the contract open; i. e., he may reject the renunciation; and in that event he cannot sue as for a breach of the contract. If the contract remains open it is open for all purposes and for the benefit of all parties. Its obligations on each party for performance stand unaffected by prior notice of renunciation and its rejection. In support of this principle it is hardly necessary to cite more than Roehm v. Horst, 178 U. S. 1, 20 Sup. Ct. 780, 44 L. Ed. 953, s. c., 84 Fed. 565, in which the au-

thorities, English and American, are exhaustively reviewed. For additional authority in support of the proposition see Marks v. Van Eeghen, 85 Fed. 853, 30 C. C. A. 208; GaNun v. Palmer, 202 N. Y. 483, 96 N. E. 99, 36 L. R. A. (N. S.) 922; Roeblings Sons Co. v. Fence Co., 130 Ill. 660, 22 N. E. 518.

A very early declaration of the rule is found in Hochster v. De La Tour, 2 E. & B. 678, to which many of the authorities in this country refer. It was later said by Lord Campbell, Chief Justice, speaking for the Court of Queen's Bench, in Avery v. Bowden, 5 E. & B. 714:

"According to our decision in Hochster v. De La Tour (2 E. & B. 678) to which we adhere, if the defendant, within the running days and before the declaration of war had positively informed the captain of The 'Lebanon' that no cargo had been provided or would be provided for him at Odessa, and that there was no use in his remaining there any longer, the captain might have treated this as a breach and renunciation of the contract; and thereupon, sailing away from Odessa, he might have loaded a cargo at a friendly port from another person; whereupon the plaintiff would have had a right to maintain an action on the charter party to recover damages equal to the loss he had sustained from the breach of contract on the part of the defendant. The language used by the defendant's agent before the declaration of war can hardly be considered as amounting to a renunciation of the contract; but, if it had been much stronger, we conceive that it could not be considered as constituting a cause of action after the captain still continued to insist upon having a cargo in fulfillment of the charter party."

On appeal to the Exchequer Chamber the judgment was affirmed notwithstanding it was there further noted that it appeared:

"That in conversation between plaintiff and defendant in England, after the declaration of war between England and Russia, defendant told plaintiff that he had determined not to load the ship, but to rely on the Chapter of Accidents, and that he had telegraphed to his agent at Odessa not to purchase a cargo."

The principle was adhered to in Johnston v. Milling, 16 Q. B. D. 470, decided in 1886.

[2] 2. The plaintiff having declined to accept the renunciation of the contract declared by the defendant on February 7th and 11th, we come to consider the only other ground on which it could be claimed that the defendant had committed a breach as a basis for the recovery of damages, to-wit, its failure to comply with the written demand of the plaintiff made on March 10th:

"We notify you that unless arrearages are paid up and your weekly payments in advance begun on March 13th, 1911, we will consider your default as a breach by you of the contract, and will proceed to collect the amount then owing for services actually rendered, and the damages accruing to us on account of the failure on your part to carry out the contract."

It is unnecessary to give extended consideration to the failure of the defendant to pay the arrearages as demanded as constituting a breach. The non-payment of the several instalments constituting the sum of the "arrearages," weekly in advance, had undoubtedly been waived by the plaintiff in its continuing to furnish reports thereafter.

The matter of importance in this respect is the failure of the defendant to pay in advance the instalment for the ensuing week, which,

confessedly, it did not do. Did this failure constitute a breach of the contract in such legal sense as to enable the plaintiff, by reason thereof, to recover as damages future profits which it might have made for the remainder of the term? This is the character of the relief which it seeks. The contract was entire, and was not broken up into separate parts as separate contracts on account of the provisions for payment by weekly instalment. After performance was begun the failure of the defendant to pay an instalment, as provided in the contract, would not absolve the plaintiff from its obligation to continue performance on its part, unless it terminated the contract for such failure. The contract itself did not undertake to give any other effect to such failure to pay than that placed on it by the law. True, the obligation to pay each instalment in advance was in the nature of a condition precedent, yet it was an independent covenant, and for each default there was only the ensuing legal remedy therefor. Norrington v. Wright, 115 U. S. 188, 6 Sup. Ct. 12, 29 L. Ed. 366; Cherry Valley Iron Works v. Florence Iron River Co., 64 Fed. 569, 12 C. C. A. 306; Manufacturing Co. v. Royer Wheel Co., 105 Fed. 324, 44 C. C. A. 523.

In Loud v. Land & Water Co., 153 U. S. 564, 578, 14 Sup. Ct. 928, 932 (38 L. Ed. 822) it is said:

"In the learned note of Serjeant Williams to the early case of Pordage v. Cole, 1 Saund. 320a, it is said that 'if a day be appointed for payment of money, or part of it, or for doing any other act, and the day *is* to happen, or *may* happen, *before* the thing which is the consideration of the money, or other act, is to be performed, an action may be brought for the money or for not doing such other act *before* performance; for it appears that the party relied upon his *remedy*, and did not intend to make *performance* a condition precedent; and so it is where *no time* is fixed for performance of that which is the consideration of the money or other act.'"

The principle was directly presented and considered in Wharton v. Winch, 140 N. Y. 287, 35 N. E. 589, and it is there said:

"It is undoubtedly true that the defendant's failure to pay the instalment was such a breach of the contract as absolved the plaintiff from all obligation to further perform on his part while the default continued. Nor was he bound to grant the defendant any indulgence, and wait for any period of time, in order to enable him to make good his broken promise. In that sense, punctual payment was a condition precedent. The obligation of the plaintiff to proceed under the contract depended upon it. If it was not fulfilled, one of two courses was open to the plaintiff. He might at once rescind the contract and refuse to go on, and immediately recover for the materials furnished and the services rendered under it; or he might proceed with the performance of the contract on his part, and at the same time, if he chose, bring suit to recover the past due instalments."

Also in Beatty v. Lumber Co., 77 Minn. 272, 79 N. W. 1013, it is said:

"It is doubtless true that a failure to pay the instalment due was a breach of the terms of the contract, and they were not bound to wait for the defendant to make the payment, and plaintiffs then had the right to abandon the contract, or they might have continued to perform the services, and have brought suit for the instalments due. Although the plaintiffs abandoned the contract on the very day of the defendant's failure to pay them the instalments due, yet the defendant placed no obstacle in the way of their going on with the work, unless a failure to pay the instalment due can be so regarded.

But there is nothing in the contract which makes a failure to pay an instalment due at a stated time a condition precedent to the further prosecution of the work, and which made its non-payment such a violation of the contract as to authorize the other party to abandon the work, and sue upon it as for having been prevented from completing it by the act of the party who had thus failed to perform such condition precedent; hence the law cannot infer such a consequence from the ordinary obligation to pay money at a particular time or upon the completion of a specified part."

The same principle is given recognition and enforced in the following: Cox v. McLaughlin, 52 Cal. 590; Id., 54 Cal. 605; Porter v. Reservoir Co., 100 Cal. 500, 35 Pac. 146; Bethel v. Salem Imp. Co., 93 Va. 354, 25 S. E. 304, 33 L. R. A. 602, 57 Am. St. Rep. 808; Palm v. O. & M. R. Co., 18 Ill. 217; Christian Co. v. Overholt, 18 Ill. 223; Moore v. Taylor, 42 Hun (N. Y.) 45, 58; Kendall B. N. Co. v. Com'rs, 79 Va. 563; Weber v. Insurance Co., 5 Mo. App. 51, 55; Fitzgerald v. Hayward, 50 Mo. 516; Bean v. Miller, 69 Mo. 384.

It may be that the action taken by the plaintiff on March 10th as above noted, and thereafter in withdrawing its agent and appliances from the defendant's office and declining to further perform the contract on its part was somewhat induced by the telegram and letter which it received from the defendant on February 7th and 11th, but we have already seen that its failure to then take the defendant at its word and stand upon an anticipatory breach had the effect of keeping the contract open for the benefit of both parties; and thereafter the defendant did nothing upon its part, except its failure to pay instalments, that in any wise indicated that it would not continue to perform the contract. The plaintiff's agent remained in its office and furnished the reports as required by the contract, and it furnished to the plaintiff the news locally gathered. And of more importance is the fact that the plaintiff indicated by its notice to the defendant of March 10th that it did not in any respect take the threatened action on its part for any other cause than defendant's failure to meet the instalments. We therefore, feel that the principle of law declared in the cases above cited is directly applicable, and that the plaintiff is not entitled to recover profits which it would have made by continuation of performance as damages.

I attach hereto a finding of facts, and have indicated on the margin the action of the court on each request for instruction.

The defendant has conceded that five instalments are unpaid, for which the plaintiff will have judgment, with interest thereon from March, 1911, at eight per cent., making a total sum of $1,190.00 and costs, and judgment is so ordered.

COLLINS v. BRADLEY CO.

(District Court, W. D. Wisconsin. October 30, 1915.)

1. EQUITY ⟹362—PLEADING—MOTION TO DISMISS.

Under equity rule 22 (198 Fed. xxiv, 115 C. C. A. xxiv) and Act March 3, 1915, c. 90, 38 Stat. 956, which provides that "any party to the suit shall have the right, at any stage of the cause, to amend his pleadings so as to obviate the objection that his suit was not brought on the right side of the court," a motion to dismiss a bill because complainant has an adequate remedy at law will not lie.

[Ed. Note.—For other cases, see Equity, Cent. Dig. §§ 958–961; Dec. Dig. ⟹362.]

2. EQUITY ⟹441—SUIT FOR ENFORCEMENT OF DECREE—SUIT IN EQUITY.

A bill in equity is the proper remedy for enforcing a decree of another court of equity for an accounting.

[Ed. Note.—For other cases, see Equity, Cent. Dig. §§ 1058–1064; Dec. Dig. ⟹441.]

3. CONTRACTS ⟹355—ACTIONS—JUDGMENT.

Complainant had a claim against defendant corporation, which a majority of the stockholders acknowledged and were willing to pay, but because of dissent of the remaining stockholders they caused defendant to pay their proportionate share of the claim, taking an agreement from complainant to assign to defendant a proportionate share of any sum received by suit. In a suit on the claim the court treated such agreement as a payment, and entered decree only for the balance due. *Held*, that by such action defendant obtained the full benefit of the agreement, and could not claim thereunder any share of the sum recovered by the decree.

[Ed. Note.—For other cases, see Contracts, Dec. Dig. ⟹355.]

In Equity. Suit by Wallace G. Collins against the Bradley Company. On motion to dismiss and final hearing. Motion denied, and decree for complainant.

C. H. Van Alstine, of Milwaukee, Wis., and H. H. Field, of Chicago, Ill., for plaintiff.

Jones & Schubring, of Madison, Wis., for defendant.

SANBORN, District Judge. Final hearing on bill in equity to enforce a decree in an accounting suit between the same parties, rendered by the United States District Court of the state of Washington. By the bill the equity jurisdiction is alleged to depend upon the fact that this action is brought to enforce a decree in chancery, and also that defendant will claim an unjust set-off against part of that decree, if any action at law is brought upon it. Defendant filed its answer and counterclaim, setting up such set-off, and at the hearing filed a motion to dismiss the suit, on the ground that the bill does not state a case on the merits and that plaintiff has an adequate remedy at law. Evidence was taken, and the case submitted on the motion, pleadings, and proofs.

It appears that the Washington suit was one of accounting, brought upon an oral contract between Collins and one William H. Bradley, to the effect that the former should have a 26⅔ per cent. interest in the profits of certain timber land which Collins was instrumental in ac-

quiring for the Bradley Company. Collins' contract being oral, it was claimed by the defendant that he was not a competent witness as to its terms under the Washington statute, because William H. Bradley was not living at the time of the hearing. The court, however, held that Collins was a competent witness. The total profits realized on the sale of the property were $279,500.33, of which the interest of Collins under the agreement was $93,166.77. In the original bill in the Washington suit it was alleged that the total profits were about $282,000, and Collins' share about $94,000, and that the Bradley Company had paid (or caused to be paid) to Collins $74,739, but refused to pay any further sum. Later an amended bill was filed, so drawn as to omit the allegation of partial payment, and claiming the whole of Collins' share. The original bill was filed November 10, 1910, and the amended bill in April, 1911.

After the death of William H. Bradley an agreement, called Exhibit A, was made between Collins and four of the stockholders of the Bradley Company, owning five-sixths of its stock, to the effect that there should be paid to Collins, on account of profits on the transactions aforesaid, such proportion of 26⅔ per cent. of the net profits as the stock held by each shareholder signing Exhibit A should bear to the entire capital of the corporation. And on August 12, 1907, after the whole of the net profits had been realized, Collins signed a paper, known as Exhibit B, in which Collins acknowledged payment of $72,842.97, in consideration whereof he assigned to the four stockholders who signed Exhibit A all his interest under Exhibit A, and then proceeding as follows:

"And in case I shall prosecute to final judgment and obtain a recovery of any sum against Bradley Company upon my claim for 26⅔ per cent. of the net profits realized upon said lands, which claim is referred to in said contract, then and thereupon said Bradley Company shall be entitled to, and shall have from me, on demand and without further consideration, an assignment and transfer to it of an undivided 4998⅓/6000 share of such judgment, and in case I should fail or neglect to make such assignment and transfer, this receipt shall operate as a discharge and satisfaction pro tanto of such judgment."

The reason why Exhibits A and B were made was that there was a dispute between the stockholders as to the validity of Collins' claim. The Bradleys, holding five-sixths of the capital, were willing to concede validity, and pay the claim in full. But one shareholder, Mrs. Kelly, owning the rest of the capital, took the position that the Collins agreement was never made, if actually made was oral, could never be proved after the death of William H. Bradley, and that the corporation should vigorously defend. So the Bradleys signed Exhibit A, the corporation paid the $72,842.97, which was their proportion of Collins' claim, and the corporation in turn withheld a like amount from these shareholders out of the dividends they would otherwise have received, derived from the net profits.

When the accounting suit came on for hearing, Collins testified to the contract, and the court decided that he was a competent witness. Counsel for plaintiff also offered in evidence Exhibits A and B. These papers, not being contracts of the corporation, were vigorously objected to by defendant as entirely improper, tending to improperly

influence the court on the main question of the existence of the oral agreement. They were admitted, however; the court stating that they would not be considered on the merits. After deciding that Collins' testimony was admissible, and that the contract was established, the court in his opinion said:

"The relief to which the complainant is entitled, and the form of the decree, was not discussed at the hearing or in the briefs. The bill did not give credit for the sums paid by the corporation under the agreement between the stockholders as above set forth, perhaps from a desire on the part of the complainant to protect these stockholders from further liability. I am of opinion, however, that the payments thus made must be treated as if made by the corporation, and the stockholders must settle their equities between themselves as best they can. The complainant is entitled to the balance due as above stated, with interest and costs, and a decree will be entered accordingly."

In the decree it was found that plaintiff was entitled to $93,166.17, and after applying the payment he should recover the balance, with interest, amounting to $22,837.

[1] *Remedy at Law.* Defendant has moved to dismiss on the ground that plaintiff has an adequate remedy at law. No such motion lies under equity rule 22 (198 Fed. xxiv, 115 C. C. A. xxiv), providing only for a transfer to the law side. The rule is much broadened by Act March 3, 1915, c. 90, 38 Stat. 956, creating section 274a of the Judicial Code. Under this legislation:

"Any party to the suit shall have the right, at any stage of the cause, to amend his pleadings so as to obviate the objection that his suit was not brought on the right side of the court."

The statute undoubtedly applies to this action, although passed after its commencement. The equity rule and the statute have swept away entirely any and all technical objection whatsoever. While the Constitution preserves the right to a jury trial in every action at law, the practice as to raising the objection is revolutionized. Defendant's motion to dismiss may be taken as a motion to transfer the case to the law side, if the remedy at law is adequate; so it is unnecessary to consider that question.

[2] Plaintiff argues that he has no complete or efficient remedy at law, because it is doubtful whether a court of law could relieve him from the quoted clause of Exhibit B, providing for an assignment of five-sixths of the amount decreed. Plaintiff further urges that a bill in equity is the proper remedy for enforcing a decree, under Shields v. Thomas, 18 How. 253, 15 L. Ed. 368. Shields v. Thomas was an equity suit, brought, like this, to enforce payment of a decree. The court say:

"With respect to the character and effects of decrees in chancery, although they now rank in dignity upon an equality with judgments at law, it is well known that they were once regarded as not being matters of record, and that the final process incident to judgments at law was unknown to and not permitted in courts of equity; that where such process has been permitted to them, it has been the result of statutory enactments. But the extension to a court of equity of the power to avail itself of common-law process cannot be regarded as implying any abridgment of the original constitutional powers or practice of the former, but as cumulative and ancillary, or as leaving those powers and that practice as they formerly existed, except as they should have been expressly restricted. Amongst the original and undoubted powers of a

court of equity is that of entertaining a bill filed for enforcing and carrying into effect a decree of the same or of a different court, as the exigencies of the case or the interests of the parties may require. Vide Story's Equity Pleading, §§ 429, 430, 431, upon the authority of Mitford, Eq. Pl. 95, and of Cooper's Eq. Pl. 98, 99." Shainwald v. Lewis (D. C.) 69 Fed. 487.

It may also be noted that the provision, now found in section 267 of the Judicial Code (Act March 3, 1911, c. 231, 36 Stat. 1163; section 723, R. S. [Comp. St. 1913, § 1244]), adopted in 1789, was—

"merely declaratory, making no alteration in the rules of equity on the subject of legal remedies, but only expressive of the law which has governed proceedings in equity since their adoption in the courts of England." Whitehead v. Shattuck, 138 U. S. 146, 11 Sup. Ct. 276, 34 L. Ed. 873.

Reference was had to the English chancery system, unaffected by state laws. Smyth v. Ames, 169 U. S. 466, 516, 18 Sup. Ct. 418, 42 L. Ed. 819.[1] Under that system a decree for accounting was not, like a judgment at law, for so much money, but directed the defendant to account for and pay over a certain sum. In other words, such decrees were in personam, and not in rem. 1 Pom. Eq. Jur. § 170. It is true that, under the practice for the last hundred years or more, final decrees for money in accounting suits have provided that complainant recover a definite sum, the same as judgments at law, and actions at law might be brought on such decrees. Pennington v. Gibson, 16 How. 65, 14 L. Ed. 847. But it is also true that in the construction of section 723 the analogies of the English equity practice are to be followed, rather than the modified system of American courts. Shields v. Thomas is quite similar to the present action, has never been disapproved by the Supreme Court, and there is no reason for departing from the rule there adopted.

Whether a suit at law would afford as prompt and efficient a remedy as this action is doubtful. Exhibit B provides that Collins shall assign to Bradley Company a large share of the recovery, and if he does not do so five-sixths of the amount shall be ipso facto discharged. It is probable that the Washington decree amounted to a ruling that, when the $72,000 payment had been applied, the consideration for Exhibit B failed, and that this could be adjudged at law as well as in equity. At the same time an injunction restraining defendant from taking any benefit from that instrument is more efficient.

Defendant loses nothing by being deprived of a jury trial. There is no disputed question of fact in the case. Had the action been on the law side, the court must have directed a verdict one way or the other. Obviously the question of remedy at law is of little or no consequence in this particular case, especially in view of rule 22 and the legislation of 1915.[2]

[1] This rule is subject to very few exceptions, one of which is a suit to restrain void taxes. In such a case the state law affords an adequate remedy. Singer Sewing Machine Co. v. Benedict, 229 U. S. 481, 33 Sup. Ct. 942, 57 L. Ed. 1288.

[2] In the recent case of United States v. Illinois Surety Co., 226 Fed. 653, — C. C. A. —, in the Circuit Court of Appeals of this circuit, on rehearing, there was a motion to dismiss on the ground that the suit should have been in equity instead of at law, and it was held that the objection was waived, but that it was of no practical importance which forum was the proper one, because the facts were practically undisputed.

[3] *Effect of Exhibit B.* This paper admitted that Collins had received $72,842.97 from the Bradley Company, in consideration whereof he assigned to it all his claim under Exhibit A. Collins also agrees that, in case he shall obtain judgment and recover "any sum" against Bradley Company on his claim for 26⅔ per cent. of the profits of the lands referred to in Exhibit A, then Bradley Company shall have from him, on demand and without further consideration, an assignment of five-sixths of such recovery, "and in case I should fail or neglect to make such assignment and transfer this receipt shall operate as a discharge and satisfaction pro tanto of such judgment." Defendant now claims that, since Collins has recovered $22,000 upon his claim for profits, he must assign five-sixths of it, and can in this action get only the remaining one-sixth.

The plain answer to this contention is that defendant has already obtained, in effect, such assignment. The true intent and meaning of Exhibit B is that if Collins should obtain judgment for the full amount of his claim, without any credit for the sum paid him, then the judgment should be pro tanto discharged. Exhibit B grew out of Exhibit A, made between Collins and the shareholders. Bradley Company did not sign Exhibit B, which was not technically admissible in the Washington suit on behalf of the plaintiff, although it might properly have been received, if offered by defendant as a payment, though defendant would never have offered it because of its implication of the justice of the demand. But it was received in evidence and given its full effect by the trial judge. Thereby defendant obtained all it could ever be entitled to under it, and cannot have any more. All consideration for the agreement to assign failed as soon as the court gave defendant all the benefit coming to it by virtue of its partial payment. The assignment, in substance and effect, was made by operation of law as soon as the credit was applied, and defendant cannot have a second technical transfer in order to defeat a claim held just in the former decree.

There should be a decree for the amount claimed, and an injunction restraining defendant from setting up any claim under Exhibit B, with interest and costs.

THE ROCHESTER.

(District Court, W. D. New York. September 7, 1915.)

1. ADMIRALTY ⟹41—SUITS IN REM—JOINDER OF LIBELANTS.

Whether or not a multiplicity of persons having claims against a vessel shall be permitted to unite in a single libel, or to consolidate their various libels, rests in the sound discretion of the court.

[Ed. Note.—For other cases, see Admiralty, Cent. Dig. §§ 350–368; Dec. Dig. ⟹41.]

2. ADMIRALTY ⟹41—SUITS IN REM—JOINDER OF LIBELANTS.

A number of libelants, all of whom were passengers on a steamer on the same voyage, may properly be permitted to join in a single libel against the vessel to recover the damages sustained by each by reason of the bad quality or unfit condition of the food furnished on such voy-

age, where the cause may be tried to the court; but where jury trial is demanded, under Rev. St. § 566 (Comp. St. 1913, § 1583), and the number of libelants is large, such joinder is not practicable.

[Ed. Note.—For other cases, see Admiralty, Cent. Dig. §§ 350–368; Dec. Dig. ⚷41.]

In Admiralty. Suit by John Bashaw and others against the steamship Rochester. On exceptions to libel. Exceptions allowed.

Hamilton Ward, of Buffalo, N. Y. (Lewis A. McGowan and Irving W. Cole, of Buffalo, N. Y., of counsel), for libelants.

Brown, Ely & Richards, of Buffalo, N. Y. (Burlingham, Montgomery & Beecher, of New York City, of counsel), for claimant.

HAZEL, District Judge. The claimant has filed exceptions to the libel, a proceeding in rem, on the grounds that there is a misjoinder of parties libelant and that, under admiralty rule 30 (29 Sup. Ct. xlii), the bond filed herein is insufficient. The libelants, who were passengers on the steamer Rochester on a voyage from Buffalo to Put-in-Bay, Ohio, and Detroit, Mich., and return, have joined in an action to recover damages alleged to have been sustained by them from the pollution of food and water during the voyage, owing to improper equipment, by reason of which they became sick and diseased aboard the vessel and after leaving it; some suffering from enteritis, and others from ptomaine poisoning and typhoid.

[1] The consolidation of two or more actions in admiralty is based upon the fact that such actions are ordinarily in rem against the common res, a proceeding which necessitates a seizure of the libeled vessel to bring her within the custody and control of the court. Whether a multiplicity of persons having claims against the vessel shall be permitted to unite in a single libel or to consolidate various libels rests in the sound discretion of the court. Indeed, section 921 of the Revised Statutes (Comp. St. 1913, § 1547) expressly authorizes the court in actions of like nature, or relating to the same subject-matter, to make such orders and rules concerning the procedure as may be required to avoid unnecessary cost or delay in the administration of justice, and to consolidate when it appears reasonable to do so. In the present case it is not difficult to perceive the propriety and reasonableness of joining the different causes of action in a single libel. Even at common law is recognized the consolidation rule, which originated in England with Lord Mansfield, because of the expense and delay attending the trial of a multiplicity of actions. In Mutual Life Insurance Co. v. Hillmon, 145 U. S. 285, 12 Sup. Ct. 909, 36 L. Ed. 706, the rule of joinder in insurance causes was adopted as provided for in section 921 of the Revised Statutes.

In Salmon Falls Mfg. Co. v. The Tangier, Fed. Cas. No. 12,267, it was held that in case of joinder of parties libelant the evidence relating to questions common to all was to be taken but once, and when these were determined the cases became separate and independent, each litigable on its own merits. It was said in that case that such a consolidated proceeding was authorized by the general principles of

admiralty practice, and was not a right confined to seamen suing for wages, but extended to all parties in analogous cases. In Lambert et al. v. Rich et al., 12 How. 347, 13 L. Ed. 1017, the Supreme Court said that where there were several claims against a vessel, founded upon common injury and loss, it was fit and proper that the proceedings should be joined by allowing the libelants to unite in a single libel. Thus it will be observed that the rule as stated in Oliver v. Alexander, 6 Pet. 143, 8 L. Ed. 349, has been broadened to include a proceeding wherein there is shown to exist common responsibility to a number of persons. The Prinz George (D. C.) 19 Fed. 653, affirmed (C. C.) 23 Fed. 906; The Oregon, 133 Fed. 609, 68 C. C. A. 603. These adjudications were based on somewhat different facts, but they are nevertheless authorities for joinder of parties libelant where claims are asserted against a common res.

[2] In the present case the libelants have demanded a trial by jury under section 566 of the Revised Statutes (Comp. St. 1913, § 1583), giving such right in cases of contract or tort arising on a vessel or in connection with navigation upon the Great Lakes and connecting waters; but there is manifest difficulty in disposing of a multiplicity of causes of action by a jury in a single suit, especially in a case like this, where the injuries sustained are such as to entitle each libelant to a separate and distinct compensation involving testimony of different witnesses in each individual case as to the nature and extent of the injuries, and involving no doubt conflicting opinions of medical experts. I think such perplexity and confusion would attend such a trial as to make it embarrassing, if not wholly impossible, to properly decide and dispose of each case. It certainly would be extremely difficult for the jury to retain in their minds the various individual injuries complained of (49 or 59 in number, if additional actions are consolidated), the testimony in relation thereto, and the different amounts of compensation to be awarded. Proctor for libelants, insisting upon the right to trial by jury, suggests that, after the jury has established and reported to the court the liability of the vessel, the question of damages should be passed upon as a special issue by the same jury or by different juries; but such a proceeding would not appreciably lessen the difficulty of the trial, and therefore the order of consolidation or joinder heretofore made at the time the libel was filed should be vacated, unless trial by jury is waived by libelants.

The exception, therefore, to the prosecution by libelants of a single libel will be allowed, unless such libelants within 10 days withdraw their demand for trial of the issues by jury, in which case the said order of consolidation or joinder will remain in force and effect.

The exception arising from the insufficiency of the bond for costs heretofore filed herein is not without merit, and will be allowed, unless the libelants who are nonresidents file, under local admiralty rule 30, a new bond for costs in the amount of $1,200.

So ordered.

UNITED STATES v. PHILADELPHIA & R. RY. CO.

(District Court, E. D. Pennsylvania. September 27, 1915.)

Nos. 18–20.

1. GRAND JURY ⟹30—DISCHARGE—WHAT CONSTITUTES.

While Judicial Code (Act March 3, 1911, c. 231) § 285, 36 Stat. 1166 (Comp. St. 1913, § 1262), declares that District Courts may discharge their grand juries whenever they deem a continuance of the sessions of such juries unnecessary, a grand jury, unless discharged by the court, continues to exist until the end of the term, though it does not continue in session; hence, though relieved from service provisionally, the grand jury may be recalled.

[Ed. Note.—For other cases, see Grand Jury, Cent. Dig. § 68; Dec. Dig. ⟹30.]

2. GRAND JURY ⟹31—RECALL—RIGHT TO.

Where the court relieved grand jurors provisionally, and they were recalled by the marshal, acting under the orders of the district attorney, the court may, the jurors being present, order them to consider matters which it was desired to submit to them, and the challenge to the array will be overruled, though the grand jury, until authorized by the court, had no power to find indictments.

[Ed. Note.—For other cases, see Grand Jury, Cent. Dig. § 69; Dec. Dig. ⟹31.]

The Philadelphia & Reading Railway Company was charged with crime, and pleas in abatement were filed. On replication to such pleas. Pleas overruled.

See, also, 225 Fed. 301.

Robert J. Sterrett, Asst. U. S. Atty., and Francis Fisher Kane, U. S. Atty., both of Philadelphia, Pa.

Wm. Clarke Mason, of Philadelphia, Pa., for defendant.

THOMPSON, District Judge. [1] The main basis for the pleas in abatement is the allegation that the grand jury for March term, 1915, was discharged on March 10, 1915. There is no question as to the regularity of the issuing of the original venire, nor of the summoning of the grand jurors in the first instance for the March term. Having been duly summoned, and having been sworn, the individuals became as a body the grand jury for the March term.

Section 285 of the Judicial Code provides that:

"The District Courts * * * may discharge their grand juries whenever they deem a continuance of the sessions of such juries unnecessary."

Until discharged by the court, the grand jury, therefore, continues to exist until the end of the term, even though it does not continue in session. On March 10, 1915, Judge Dickinson did not determine that he deemed a continuance of the sessions of the grand jury unnecessary, and he did not terminate the existence of the grand jury as an organized body by discharging the grand jurors at that time, for they were expressly instructed that they were relieved from service provisionally; that is, subject to notice of recall by the court, if so requested by the district attorney. As long as this body was in existence,

it was unnecessary to order a new venire to issue to summon a new grand jury, under section 284 (Comp. St. 1913, § 1261).

[2] The remaining question, then, is whether the grand jury which assembled on March 25, 1915, in pursuance of notification from the marshal, under the instructions of the district attorney, was recalled in such manner as to empower them to act upon the bills of indictment returned on March 31, 1915, against the defendant.

While business is actually pending and unfinished before a grand jury, it may, at its own instance, adjourn to meet at a later day, either to suit its own convenience or that of the district attorney, upon his request; but that was not the situation in this case, and, without an order of the court, neither the district attorney nor the marshal had authority to order the grand jury to reconvene. If, in the present instance, the grand jury had, without appearing in court, or without any order or authorization of the court, proceeded to consider new indictments laid before it by the district attorney, such sessions would have been unauthorized, unlawful, and void. When the grand jurors assembled on March 25th in court before Judge Dickinson, they did not derive any authority whatever from the notice they had received from the marshal, at the instance of the district attorney. Being present in court, however, and being the same persons constituting the grand jury for the March term, and not having been discharged, the court had power to order their recall forthwith, upon being advised by the district attorney that he desired to present indictments before them. Upon the challenge to the array, Judge Dickinson held that he had not discharged the grand jury, so as to terminate its existence as a grand jury, and refused to sustain the challenge to the array, and, having them then in court before him, held that no other mandate was required to bring them into court. This was in effect an order at that time that they be recalled forthwith and proceed with their sessions.

The pleas are therefore held insufficient, and overruled.

In re I. S. REMSEN MFG. CO.

(District Court, E. D. New York. August, 1915.)

BANKRUPTCY ⟹140—PROPERTY VESTING IN TRUSTEE—UNRECORDED CONDITIONAL SALE CONTRACTS.

Bankr. Act July 1, 1898, c. 541, § 47a(2), 30 Stat. 557, as amended by Act June 25, 1910, c. 412, § 8, 36 Stat. 840 (Comp. St. 1913, § 9631), which vests a trustee, as to property coming into his possession, with "all the rights, remedies and powers of a creditor holding a lien by legal or equitable proceedings thereon," does not entitle him as against the seller to hold property delivered to the bankrupt under a conditional sale contract reserving title, which, although unrecorded, is good under the state statute, except as against subsequent purchasers, pledgees, or mortgagees in good faith.

[Ed. Note.—For other cases, see Bankruptcy, Cent. Dig. §§ 198, 199, 219, 225; Dec. Dig. ⟹140.]

In Bankruptcy. In the matter of the I. S. Remsen Manufacturing Company, bankrupt. On application of the Adder Machine Company to compel trustee to deliver property to conditional vendor. Application granted.

Black, Varian & Simon, of New York City, for claimant.
Winslow, Keenan & Budd, of New York City, for trustee.

VEEDER, District Judge. This is an application by the Adder Machine Company for an order directing the trustee to deliver to it a certain machine. The machine in question was delivered by the claimant to the bankrupt on February 23, 1915, under a conditional contract of sale, which provided that title should remain in the claimant until the purchase price of the machine had been fully paid. Part of the purchase price remains unpaid, and the claimant, therefore, asks that the machine be returned.

The bankrupt filed a voluntary petition in bankruptcy on May 27, 1915. The contract of February 23, 1915, was not filed in the office of the register of Kings county until after the trustee was in possession of the bankrupt estate, by virtue of which fact the trustee claims title to the machine under section 47a (2), of the Bankruptcy Act, which vests a trustee with the rights of a judgment creditor. But section 62 of article 4 of the Personal Property Law of this state (Consol. Laws, c. 41) provides that:

"All conditions and reservations in a contract for the conditional sale of goods and chattels * * * shall be void as against subsequent purchasers, pledgees or mortgagees, in good faith, and as to them the sale shall be deemed absolute, unless such contract of sale, containing such conditions and reservations, or a true copy thereof, be filed as directed in this article."

Accordingly the failure to file a contract of conditional sale makes the condition void, not as to all creditors, but only as against subsequent purchasers, pledgees, and mortgagees in good faith. Section 47a (2) of the Bankruptcy Act does not purport to clothe a trustee with the rights of a subsequent purchaser.

The contract of conditional sale here in question is valid as to creditors, therefore valid as to the trustee, and the machine should be surrendered to the claimant.

HOEY AY SING v. UNITED STATES.

(Circuit Court of Appeals, Third Circuit. October 28, 1915.)

No. 1968.

ALIENS ⟹32—PROCEEDING FOR DEPORTATION OF CHINESE—EVIDENCE.

Evidence *held* insufficient to establish the citizenship of a Chinese person arrested for deportation, under the statutory rule that he has the burden of proving affirmatively his right to be in this country.

[Ed. Note.—For other cases, see Aliens, Cent. Dig. §§ 84, 92–95; Dec. Dig. ⟹32.]

Appeal from the District Court of the United States for the Western District of Pennsylvania; W. H. S. Thomson, Judge.

Proceeding by the United States for deportation of Hoey Ay Sing. Order of deportation affirmed by the District Court, and defendant appeals. Affirmed.

The following is the opinion of the District Court:

This case has given me considerable thought and solicitude, being desirous on one hand of upholding the law, and on the other anxious to avoid the injustice which would result in the deportation of one who in fact was an American citizen. A citizenship in the republic is a right of great value. The law must be applied and administered as we find it. The acts of Congress are plain. Chinese cannot be naturalized, and Chinese laborers cannot be admitted into this country. By section 3 of Act May 5, 1892, c. 60, 27 Stat. 25 (Comp. St. 1913, § 4317), any Chinese person arrested under the provisions of the act shall be adjudged to be unlawfully within the United States, unless he shall establish by affirmative proof to the satisfaction of the judge or commissioner his right to remain.

It was shown that the defendant is a Chinese laborer, and being within the United States the burden thus shifts upon him to establish that he is lawfully within the country. There must not only be testimony to support this right, but the testimony should be of such character as to satisfy the court of its truth. The defendant does not produce any certificate of residence, nor claim that any such was issued to him; but he claims that he was born in the United States, of Chinese parents, who were permanently domiciled and doing business here. If this were true, he would be a citizen of the United States, and therefore lawfully within the country. I listened closely to the witnesses produced by the defendant, and have read the testimony more than once with care, but find myself wholly unsatisfied as to its truth. Although the testimony of the two Chinamen, Thick and Suey, if standing alone, might perhaps reasonably be persuasive of the fact that the defendant was born in California, yet this testimony cannot be divorced from the testimony of the defendant himself, which in my judgment is totally unreliable. In fact, the case of the defendant would be very much stronger, if the defendant had not testified at all. He does not pretend to have told the truth in many of his answers to the questions put to him in the preliminary examination. There he said he did not know his father's or mother's name, or when his father died. He did not know how long he had been in the United States; on what street in San Francisco he was born; how long he had lived there, saying that he was too little to remember the names of any of the streets. When asked where he had been living, he said: "I have no work; I go from one place to another." He said he bought his ticket himself—bought it in a small town, but did not know the name of the town where he got on the train. He later stated that he bought his ticket in Buffalo. He claimed to have had a certificate of residence, which was burned up at the time of the earthquake in San Francisco. He could not say how much he had paid for his ticket, or any place where he had worked in the United States.

⟹For other cases see same topic & KEY-NUMBER in all Key-Numbered Digests & Indexes

When one's position is just and true as to any matter, he never needs to resort to falsehood or prevarication to support it. Assuming that the defendant was concealing the truth, and attempting to keep the officers of the government in the dark at the preliminary hearing, when he was examined in open court he was certainly called upon to tell the truth, and this I am satisfied he did not do. His story is that he bought a ticket in Buffalo on November 4th and got on the train there by himself; that in about an hour he felt hungry, and when the train stopped got off to get a lunch, and then boarded the train again; that when he got on the train in Buffalo he went asleep, and afterwards when he woke up he found the two men who were arrested with him in Pittsburgh; that he had never seen them before. I am thoroughly satisfied that the defendant and the other two men who were arrested with him were traveling together, that they did not take the train at Buffalo, that their tickets were bought there for Baltimore, and that they were driven by automobile to Springville, some 33 miles from Buffalo, where they took the train near midnight.

The conductor states positively that no Chinamen got on the train at Buffalo; that when the train stopped at Springville three Chinamen, at least two of whom he identified, went to get on the train; that he held them back for a moment, while the passengers were alighting from the train; that he had never seen any Chinamen get on at that station before; that they took seats near each other on the train, and kept talking together; that when he went to lift the tickets he found that they were stamped at Buffalo for Baltimore, and that he became suspicious that all was not right, and at the next stop telegraphed ahead, which was the cause of their arrest at Pittsburgh. The tickets bore the same date and were of consecutive numbers. The testimony of the conductor is fully corroborated by the company's agent and operator at Springville. He testified that three Chinamen were driven up to the station by two men in an automobile, which came from towards Buffalo; that the Chinamen went to the end of the baggage room, and stood there in the shadow of the depot awaiting the train; that they did not buy any tickets at his office; and that when the train came they got on board together. The two men remained until the train pulled out and then they drove away towards Buffalo.

This, I feel assured, is the truth, and it is inconceivable to me that the defendant should thus deliberately falsify about this matter, except upon the theory that the position which he takes as a resident is false, and that he came into this country in violation of law. Guilt is always trying to hide itself, and usually does the very thing which tends to expose rather than conceal. If the defendant and his comrades were lawfully in the country, having nothing to conceal, and being on an honest mission, they would naturally have taken the train at Buffalo; but if unlawfully within the United States, it was quite natural to flee when no one was pursuing. This act of defendant, in itself suspicious, becomes doubly so when coupled with his falsehood concerning it. I would have been glad to have been able to accept the testimony of his witnesses as to the place of his birth as true, and to have declared that he is a citizen of the United States and lawfully in the country; but I cannot be convinced that an honest cause could, in any likelihood, be so smirched with falsehood.

Under all the circumstances, I am compelled to hold that the defendant is unlawfully within the United States, and the order of the commissioner is therefore affirmed.

Lowrie C. Barton, of Pittsburgh, Pa., for appellant.

Daniel S. Horn, of Pittsburgh, Pa., for the United States.

Before BUFFINGTON, McPHERSON, and WOOLLEY, Circuit Judges.

McPHERSON, Circuit Judge. In the first instance the proceeding in this case was before a United States commissioner under the Chinese Exclusion Acts. The commissioner ordered the appellant to be de-

ported, and on appeal the District Court affirmed the order. Each tribunal heard and saw the witnesses, and their concurring judgment should not lightly be disturbed. The act of Congress puts the burden on the Chinese person of proving his right to be in the country—in this case, his citizenship—and after carefully reading all the evidence we see no reason to disagree with the conclusion of the commissioner and the court below that the appellant's birth in this country has not been established. United States v. Hom Lin (C. C. A. 2d Cir.) 223 Fed. 520; Fong Ping Ngar v. United States (C. C. A. 2d Cir.) 223 Fed. 523.

The order is affirmed, on Judge Thomson's opinion, which has not been elsewhere reported and will be found in the statement above.

JENKINS BROS. v. KELLY & JONES CO.

(Circuit Court of Appeals, Third Circuit. September 3, 1915. Additional Opinion, October 18, 1915.)

No. 1904.

1. TRADE-MARKS AND TRADE-NAMES ⟹71—INFRINGEMENT OF TRADE-MARK—MARKING ARTICLE AFTER EXPIRATION OF PATENT.

Plaintiffs' predecessors manufactured the Jenkins valve, a standard type, under patents; plaintiffs continuing such manufacture after the expiration of the patents. Defendant, Kelly & Jones Company, stamped a like valve on one side "Standard Jenkins Valve," and on the other "Made by Kelly & Jones Company." *Held* insufficient to unmistakably inform the public that the thing manufactured was the work of the Kelly & Jones Company, within the rule that where, during the life of a patent, the name has become the identifying and generic name of the thing patented, such name passes to the public with the cessation of the patented monopoly, and where another avails himself of the expiration of the patent right to make the machine and use the generic designation, the name must not be used so as to deprive others of their rights and deceive the public, but the product must be marked so as to show the public that it is the work of the one making it.

[Ed. Note.—For other cases, see Trade-Marks and Trade-Names, Cent. Dig. § 82; Dec. Dig. ⟹71.]

2. TRADE-MARKS AND TRADE-NAMES ⟹71—UNFAIR COMPETITION—TEST OF.

Courts do not decide misleading markings on manufactured goods, the patent on which has expired, by the caveat emptor rule of buyer and seller, but on the theory that a buyer who has become accustomed to a particular article is entitled to be unmistakably informed that a person other than the former maker is manufacturing the same; the rights of the rival makers not being the only thing to be considered.

[Ed. Note.—For other cases, see Trade-Marks and Trade-Names, Cent. Dig. § 82; Dec. Dig. ⟹71.]

3. TRADE-MARKS AND TRADE-NAMES ⟹100—APPROVAL OF MARKINGS OF GOODS—REMAND OF CAUSE.

On appeal from a decree dismissing a proceeding in contempt for violation of an injunction against the use of a misleading marking on manufactured articles, the patent on which had expired, the Circuit Court of Appeals, after reversing the decree, and indicating the general style of marking that should be followed, and on the submission by defendant of markings, approved such markings, the parties having finally agreed

---

⟹For other cases see same topic & KEY-NUMBER in all Key-Numbered Digests & Indexes

thereon, and remanded the cause to the District Court for a determination as to the disposal of articles in the hands of defendant not conforming to the markings as approved.

[Ed. Note.—For other cases, see Trade-Marks and Trade-Names, Cent. Dig. § 114; Dec. Dig. ⟹100.]

Appeal from the District Court of the United States for the Western District of Pennsylvania; Charles P. Orr, Judge.

Action by Jenkins Bros., a corporation, against the Kelly & Jones Company. Decree for defendant (212 Fed. 328), and plaintiff appeals. Cause remanded, with directions to open and modify the decree.

Alan M. Johnson, of New York City, for appellant.

Kay, Totten & Powell, of Pitsburgh, Pa., for appellee.

Before BUFFINGTON, McPHERSON, and WOOLLEY, Circuit Judges.

BUFFINGTON, Circuit Judge. By a bill filed in the court below the complainant, Jenkins Bros., a New Jersey corporation, charged Kelly & Jones, a Pennsylvania corporation, with infringing its trademark and with unfair competition in business. The alleged wrong was in so marking a steam valve made by the defendant as to lead the public to believe they were buying complainant's valve. On final hearing that court filed an opinion, reported at 212 Fed. 328, in which the general subject-matter of controversy is so fully set forth that by reference thereto we avoid repetition. In pursuance thereof, a decree was entered enjoining respondent from continuing to mark its valves as it had done. Subsequently complainant petitioned the court to issue an attachment for contempt, alleging, in effect, that a new marking of the valves which the defendant had adopted violated the injunction. On hearing the court discharged the petition for contempt. Thereupon the complainant, assigning for error certain features of the original decree and the discharge of the contempt proceedings, took this appeal.

Without entering into the details of the case, it suffices to say that continuously, but at different times since 1864, first one Nathaniel Jenkins, then his sons under the name of Jenkins Bros., then one of his sons, and finally the complainant corporation, had successively marketed steam valves or gauge cocks and had acquired valuable trade good will in their valves, which were known as "Jenkins valves." These valves contained certain patented features which complainant's predecessors and their licensees embodied therein. Such patent monopolies have expired, and the name "Jenkins" has become fixed in the mind of the public as descriptive of the patented type of valve or disc which the defendant is now entitled to make. But the name "Jenkins" has also become fixed in the mind of the public as descriptive of such valves as were marketed by the patentee, Jenkins, and his successors.

It will thus be seen the case finally narrows down to a proper marking of the valves by the Kelly & Jones Company. In view of the fact that the evidence shows other large concerns have found no difficulty in so cataloguing, marking, and marketing such valves to their

own and complainant's satisfaction, we see no practical commercial difficulty in effecting that result in this case.

[1] At the time this bill was filed the defendant put part of its markings on one side of the valve as follows:

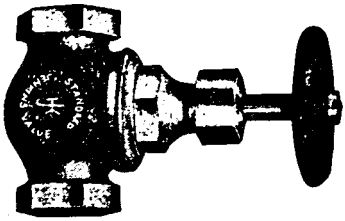

and part on the other as follows:

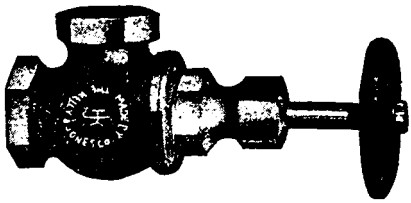

The defendant contends that, because its use of the name "Jenkins" is accompanied by the statement that the valve is made by the Kelly & Jones Company, its marking has in effect been adjudged lawful by the Supreme Court in Singer v. June, 163 U. S. 169, 16 Sup. Ct. 1002, 41 L. Ed. 118. We do not so read that case. The gist of it is summed up in that often quoted, but often misunderstood and misapplied, extract:

"The result, then, of the American, the English, and the French doctrine universally upheld is this: That where, during the life of a monopoly created by a patent, a name, whether it be arbitrary or be that of the inventor, has become, by his consent, either express or tacit, the identifying and generic name of the thing patented, this name passes to the public with the cessation of the monopoly which the patent created. Where another avails himself of this public dedication to make the machine and use the generic designation, he can do so in all forms, with the fullest liberty, by affixing such name to the machines, by referring to it in advertisements and by other means, subject, however, to the condition that the name must be so used as not to deprive others of their rights or to deceive the public, and therefore that the name must be accompanied with such indications that the thing manufactured is the work of the one making it as will unmistakably inform the public of that fact."

From this it will be seen that the sum and substance of the marking is not the mere literal, physical stamping, printing, or engraving of the maker's name on an article which in the public mind is associated with another's business, but the name must be accompanied with such indications that the thing manufactured is the work of the one making it as will *"unmistakably inform the public of that fact."*

It will therefore be seen that the marking which the Supreme Court indorses is not alone the mere letters of a maker's name, but in addition thereto, where necessary, there must be such indications that the

article is the work of the maker as will unmistakably inform the public of that fact. The Singer Case did not provide a marking stencil which was to be rigidly followed in all other cases. What it did do was to lay down the broad, reasonable, and honest commercial principle that in every case and in every article the marking must be such as to unmistakably inform the public of the truth. No case can better than the present illustrate the utter inadequacy of a mere literal use of a maker's name to prevent the public from being deceived; for the testimony is simply overwhelming that, in spite of such marking of Kelly & Jones as maker, engineers who had used complainant's Jenkins valves for years, who sent or went to hardware dealers for such accustomed valves, were furnished with defendant's valves, installed and used them, and were surprised to learn afterwards they had been deceived.

[2] It is no answer to this to say that, if they had used their eyes, they would have learned otherwise. Courts do not decide misleading markings by the caveat emptor rule of buyer and seller. One who buys a standard, dependable article through a number of years learns to trust that article. Use and years have led him to so trust it without question or inspection. If he is to be induced to use any similar article, but which is in fact not the one to which he has grown accustomed, such buyer is entitled to be unmistakably informed of that fact, and that some other than the old-time maker is making the particular article for which he pays. It is not alone the rights of rival makers that are concerned. They are able to take care of their respective rights; but the consumer, on whom the substantial loss falls, in that he is led to pay his money for that which he does not intend to buy, must be protected by the courts, and they can only do so by sanctioning no marking which travels near the border line of commercial deceit.

In saying this we are imputing no intentional wrong to the defendant. It has acted under what it supposed to be its legal rights, but the outcome has proved that the ultimate consumer, with whom as large manufacturers they never come in contact, has been misled by their markings. Why this occurred is perfectly plain. Not only was the word "Jenkins" used, but it was coupled with the word "Standard." The defendant contends, and the testimony so shows, that the word "standard" applied to a valve is a semi-technical term, and differentiates its weight from lighter constructions. But, while this word might well have been so used in trade lists and catalogues, which went to jobbers and dealers who knew and could not be misled as to whose valves they were buying, the case was far different when it came to engineers and firemen, who for years had been using Jenkins valves, when, in answer to an engineer's request for a Jenkins valve, he was handed out by a trusted dealer a valve the most prominent eye catch on which was not "Jenkins," but the words "Standard Jenkins Valve." That word "standard"—"Standard Jenkins Valve"—meant to him the original, genuine Jenkins valve, which he had bought before and intended to continue buying, as the proofs abundantly show. To our mind the adding of the word "Standard" to the name "Jenkins" was utterly at variance with the spirit of the Supreme Court's instruction:

"That the name *must be accompanied with such indications* that the thing manufactured is the work of the one making it *as will unmistakably inform the public of that fact.*"

On the contrary, the word "Standard" was an accompanying indication, which tended, both by association with "Jenkins" and the prominence of their joint place on the valve, to center the attention of the buyer on the name "Jenkins" rather than on the name of the maker. The eye, accustomed to "Jenkins," found that name, and to couple with it the word "Standard" served to further assure a buyer that he was getting the Jenkins valve to which he was accustomed. As defendant sold their Jenkins valves to dealers at less price than complainant's, it was to the dealer's financial interest to sell them to persons who thought they were buying complainant's valve. The testimony not only fails to show that dealers took any steps to protect their customers in that regard, but that the markings enabled them to tacitly mislead their customers.

The possibility of this misleading continues in the new markings of the defendant, which were considered in the attachment proceeding. Indeed, to our minds the possibility of deception was perhaps increased. Such new marking is as follows:

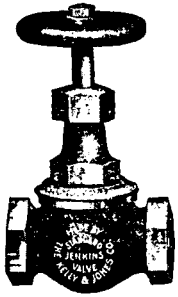

In it, as will be seen, the name "Jenkins" occupies the spot of central prominence, and is on the straight line, which is easiest read. Joined to it, in the next most prominent place, is the word "Standard." In a glance at the valve, these catchwords, "Standard Jenkins Valve," are taken in without effort, while it requires more than a glance to take in the circular line below, where the maker's name is given. After careful consideration we have reached the opinion that the accompanying marking, which has been used for some years by another manufacturer, may be used as a guide for future marking.

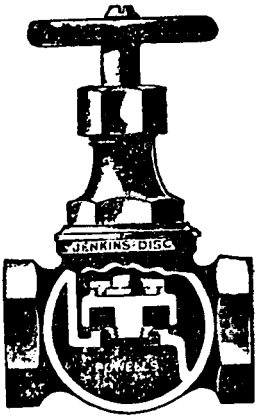

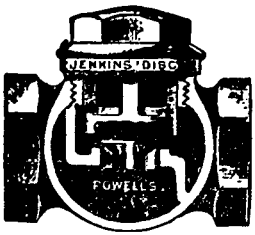

The word "Jenkins," therefore, accompanied by the word "Disc," "Type," or like word, may be placed by defendant on a corresponding place on its valve, and on the valve body, and in a central and

prominent position the words "Kelly & Jones Standard Valve" may be added. To avoid needless expense and confusion, we may add that, in case the parties cannot agree on a marking embodying our ideas, the defendant may submit for approval to this court its proposed markings. We will make no change in the order of court below as to costs in that court; the costs of this appeal shall be borne by the defendant. The matter of the disposal of such valves as defendant has on hand will be left to the order and discretion of the court below, and in view of the fact that such valves were marked under the sanction of that court, no accounting will be directed.

The cause will therefore be remanded to the court below, with directions to open and modify its decree, so as to carry out the views expressed above.

Additional Opinion.

PER CURIAM. [3] Since the foregoing opinion was filed, the defendant has submitted for our approval certain proposed markings, and we have heard also the objections thereto. As a result of the argument the parties have come to an agreement, and in accordance therewith we make the following order:

The defendant may mark its valves in strict accordance with the sketch affixed hereto, namely:

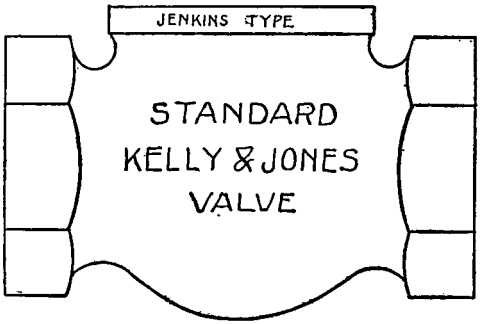

—and the clerk is directed to transmit to each of the parties a certified copy of this order with a blue print of the sketch.

The matter of the disposal of such valves as the defendant may have had on hand at the time of the decree below, or may have since offered to the market, is committed to the discretion of the District Court.

H. K. PORTER CO. v. BALDWIN LOCOMOTIVE WORKS et al.

(Circuit Court of Appeals, Third Circuit. November 9, 1915.)

No. 1967.

1. PATENTS ⟹328—VALIDITY AND INFRINGEMENT—METHOD OF OPERATING COMPRESSED-AIR ENGINES.

The Hodges patent, No. 953,334, for a method of operating compound compressed-air engines, in which atmospheric air is used as a means for re-heating the compressed air, after its expansion in the first or high pressure cylinder, and before it passes into the second cylinder, claims 1 and 4, were not anticipated, and are valid in so far as that method is employed upon locomotives; also *held* infringed.

⟹For other cases see same topic & KEY-NUMBER in all Key-Numbered Digests & Indexes

2. PATENTS ⟹112—VALIDITY—METHOD AND APPARATUS PATENTS.

The rejection of claims in an application for an apparatus patent, although acquiesced in by the applicant, does not invalidate a patent subsequently granted to him for the method of operation of such apparatus.

[Ed. Note.—For other cases, see Patents, Cent. Dig. §§ 162–165; Dec. Dig. ⟹112.]

Appeal from the District Court of the United States for the Eastern District of Pennsylvania; J. Whitaker Thompson, Judge.

Suit in equity by the H. K. Porter Company against the Baldwin Locomotive Works and the Four States Coal & Coke Company. Decree for defendants, and complainant appeals. Reversed.

For opinion below, see 219 Fed. 226.

Francis T. Chambers, of Philadelphia, Pa., and James I. Kay and Robert D. Totten, both of Pittsburg, Pa., for appellant.

Wm. A. Redding and William B. Greeley, both of New York City, for appellees.

Before BUFFINGTON, McPHERSON, and WOOLLEY, Circuit Judges.

WOOLLEY, Circuit Judge. This is an appeal from a decree of the District Court of the United States for the Eastern District of Pennsylvania, dismissing a bill of complaint, which charges the defendants with infringement of Letters Patent No. 953,334, dated March 29, 1910, granted the complainant, as assignee of Charles B. Hodges, for Method of Operating Compound Compressed-Air Engines. The claims in suit are 1 and 4, which, if valid, are admitted to be infringed. The defense is invalidity. The grounds of defense are five. Lack of patentable invention and anticipation by prior patents are two. These will be considered together; the others will be disposed of in their order.

[1] The patent is for a method, and claim 1 is as follows:

"1. The method of operating compressed-air engines, consisting in carrying the air at high pressure through and expanding it in one cylinder, and thereby reducing it below lowest atmospheric temperature, re-heating the exhaust air from said cylinder when confined by extended exposure to air heating at atmospheric temperature and thereby increasing the volume thereof and its capacity to generate power, and carrying the re-heated air through a low pressure cylinder."

Claim 4 discloses the same method, but by words which we italicize, indicates another or an additional result. This claim is as follows:

"4. The method of operating compressed-air engines, consisting in carrying the air at high pressure through and expanding it in one cylinder and thereby reducing it below lowest atmospheric temperature and re-heating the exhaust air when confined by extended exposure thereof to air at atmospheric temperature and thereby increasing *it to the necessary volume to generate substantially like power within another cylinder* of greater cubical contents and carrying such re-heated air through such low pressure cylinder."

While the drawings in the patent are of compound compressed-air locomotives, and while such engines are especially the object of the

inventor, nevertheless the claims are sufficiently broad and the specification sufficiently explicit to embrace a method of operating compound compressed-air engines of any character. The charge of infringement, however, relates to and is confined to the manufacture by the Baldwin Locomotive Works and use by Four States Coal & Coke Company, of compound compressed-air locomotives of the type which appears in the drawings. The testimony in support of the charge is restricted to the manufacture and use of such locomotives. The controversy is between locomotives. Therefore, we will restrict our consideration, and, should we find the patent valid, we will limit our decision, to the subject-matter of this litigation, which extends only to the validity of the claims of the patent in so far as they relate to the method disclosed for operating compound compressed-air locomotives. In so restricting our consideration and decision, we follow the course of this court in Hagan v. Swindell, 204 Fed. 442, 122 C. C. A. 628, where a like situation developed.

The patent deals with changes in temperature and the development of power from compressed air. Hodges' invention, if such it be, was a contribution to an art in which compressed air is used as a motive power under certain conditions. Compressed air has long been used as a motive power, but it has not been extensively used in competition with steam and electricity, because of its lower efficiency. Its use, however, is superior to that of electricity or steam in places and under conditions where there is risk of fire. Therefore, compressed-air engines are chiefly used in mines.

Engines in which air and steam are used as power do not greatly differ in type. Each contains a boiler-like receptacle in which is stored the power creating medium and means for its escape into a cylinder, where, by expansion, power is developed and transmitted by pressure to a movable piston. When steam or compressed air is used in an engine with a single cylinder, it but imperfectly performs its work because it is but partially expanded, and the exhaust of the unexpanded portion carries away unused power. To meet this waste, there developed the principle of multiple expansion, that is, expansion of the whole medium in two or more cylinders, which include at least an expansion in one cylinder under high pressure and the expansion of what is left in another and a larger cylinder under low pressure.

While power from both steam and compressed air was obtained by expansion in similarly constructed machines, there was one phenomenon developed in the expansion of compressed air, which is not present in the expansion of steam. When compressed air at atmospheric temperature of 60 degrees F. leaves the tank and enters the first or the high pressure cylinder at a pressure of about 250 pounds, there occurs upon expansion a drop in temperature of about 280 degrees F., which produces the intense cold of minus 220 degrees F. At this temperature, the moisture in the air freezes, the lubricants stiffen, the machine stops, and the residuum of power remaining inert in the air is lost. It was known that by re-heating the compressed air, its power could be regenerated, and by re-expanding the regenerated compressed air in a low pressure cylinder there could be obtained from the second

expansion a power about equal to that developed by the first, resulting in a transmission of equal power to the piston in each cylinder. The problem was how to re-heat the partially expanded compressed air and thereby restore activity to its latent power.

Without reviewing the efforts to solve this problem, it is sufficient to say that it appears that until the invention of Hodges, it had not been solved in so far as it related to movable compressed-air engines or locomotives. Hodges claims to have solved the problem by making the discovery that there existed in the open air at any temperature, sufficient heat to restore the temperature of partially expanded compressed air to nearly that of its original temperature, from which another and practically equal amount of power is developed upon a second expansion, without reducing it to the prohibitively low temperature limit. In other words, he employed the common element of air as the medium by which to re-heat the chilled expanded air, and to restore its thermal efficiency. It is admitted that this was the thing accomplished, but it is vigorously denied that in it lies invention. Whether the discovery that air contains sufficient heat to restore warmth to inert compressed air, thereby restoring or rehabilitating its power, constitutes invention, depends upon a study of thermo-dynamics, which though learnedly pursued in the testimony and briefs, cannot be indulged in an opinion.

There is much confusion concerning what was known in the arts in which heat is employed as an agency or force, of precisely what Hodges' invention or discovery consists, and to what art it belongs. Therefore, it is necessary to trace, in the briefest possible way, the forces of nature, the laws of physics and the teachings of science which have been employed in the development of this and allied arts.

When Hodges and others approached the problem of obtaining power from compressed air, there were certain principles of dynamics and physics open to them all. It was known that heat is a force of nature and a source of power; that compression of air produces molecular motion which in turn produces heat; that when compressed air is expanded, heat is released and converted into power, and that by the withdrawal of heat, the air becomes cold. Science imprisoned this known force in cylinders, provided for its liberation by expansion against movable pistons, and thereby gathered from heat the power it was known to contain.

It was known to all that air, when not under pressure, contains heat, and that it contains some heat however low the temperature, and that the cheapest of all gases as a heating medium is air, because it possesses heat without cost and is free to all. It was also common knowledge that a cold body extracts heat from its warmer surrounding medium whatever that may be, and conversely, in this devolution, the warm body is made cold. This is due to the transfer of thermal units from one to the other. It was known as a scientific fact, as before stated, that compressed air becomes cold when its heat units are withdrawn by expansion, and that it loses its thermal efficiency and is no longer a source of power until heat units are restored to it in some way or other, and that when heat is restored, compressed air regains a part of its efficiency, ready to be exerted upon further expansion. Know-

ing this, science provided compound cylinders, that is, two cylinders, in the first to expand compressed air under high pressure, and then when re-heated, to expand in the second the compressed air under lowered pressure, differentiating the sizes of the cylinders to the volume of expansion intended.

These were things well known in thermo-dynamics, in physics and in science, and constituted forces and laws free to be adopted and developed by every one. The problem in the use of these forces and in the application of these principles, consisted in finding a practicable and economical medium by which compressed air after expansion in the high pressure cylinder might be re-heated so as to restore to it an equal amount of thermal energy when expanded in the low pressure cylinder. To accomplish this, many theories were evolved and media employed. Water was known to contain heat units in large number and was used to re-heat the air in interheaters between the cylinders, but not with entire success. Other sources of heat were used. Hodges found that it was practicable to utilize the heat in the surrounding atmosphere as the medium to restore to compressed air after expansion in a high pressure cylinder its lost heat to a temperature nearly equal to its original temperature, and by the restoration of this quantity of heat, to develop by a second expansion a power practically equal to that originally developed, without reducing the temperature in either cylinder so low as to cause the freezing of moisture and the stiffening of the lubricants in the machine. It is in this and in this only that the discovery of Hodges lies.

Hodges' patent is for a method defined to consist of three stages. The first is expansion of compressed air under high pressure until its temperature has fallen materially below that of the atmosphere and not low enough to cause difficulty with ice or stiffened lubrication; second, heating the compressed air expelled from the high pressure cylinder in a chamber known as an interheater or re-heater by simple exposure to the surrounding atmospheric air; third, subsequently expanding in a second cylinder the re-heated compressed air.

Expansion in one cylinder and re-expansion in a second was common in all multiple expansion engines, and was old. It is the second step, namely employing the heat in the air at atmospheric temperature as the medium by which to restore to compressed air the heat exhausted by expansion in the first cylinder, that constitutes Hodges' claim to discovery. This seems very simple, but not until we have looked into the art to which this invention directly relates can we see how novel and valuable his discovery was, and how difficult and imperfect were the attempts of others to solve the problem by other means.

The art to which Hodges' invention directly relates is a very narrow and limited one in point of development, though somewhat extended in point of duration. Compressed-air locomotives have been in existence for over thirty years, but it is conclusively shown that no compressed-air locomotive constructed prior to Hodges' invention has been a mechanical and commercial success. The early locomotives contained but one cylinder. The power derived from the compressed air was

about half of the power it contained. The next type of locomotive was equipped with compound cylinders after the manner of steam locomotives. In the locomotive of this construction, the second or low pressure cylinder developed only a power equivalent to the heat contained in compressed air after it was chilled by expansion in the first or high pressure cylinder, unless artificially heated at a cost and under conditions that permitted it. By Hodges' method, to be employed in engines of compound cylinder construction, the re-heating of the compressed air in its transit from one cylinder to the other, and the expansion of the re-heated air in the low pressure cylinder on one side of the engine, developed power equal to that exerted by the expansion in the high pressure cylinder on the other side, and transmitted to the piston on each side about equal power. This produced results not theretofore attained. First, it obtained all the power from the original heat, and second, it obtained power from the heat restored, and third, it obained an equality of power transmitted to the pistons and thereby to the wheels on each side of the locomotive, and fourth, it obtained it without fuel cost. It is not denied that these are things accomplished by the thing which Hodges says he discovered. The best proof of it is that the manufacturing defendant adopted that thing, and in its application produced an engine superior to any it had theretofore produced.

It is contended by the defendants in this regard that the use of air as a heating medium for chilled compressed air is not invention, and second, at all events, Hodges was anticipated in its use by prior patents.

Upon the point of discovery or invention, we are satisfied that if Hodges was first to employ air as a re-heating medium in this art, it constitutes invention. It was known to science and in the art that one cubic foot of water at a given temperature has 3,390 times the heating capacity of a cubic foot of air at the same temperature. Water, therefore, was early used as a re-heating medium, but water, either at normal or at artificially raised temperatures, would freeze when brought in contact with expanded air, and thereafter would be useless unless heat was restored to it. The transmission of heat by water was altogether impracticable upon compressed air locomotives used in mines, because of the risk of fire, and impracticable when used upon locomotives out of mines because of the necessity and cost of supplying heat by artificial means. When it was known that a cubic foot of water contained 3,390 more units of heat than one cubic foot of air at the same temperature, or that 3,390 cubic feet of air would supply only the same heat as one cubic foot of water, it required an imagination amounting to audacity to conceive that air at atmospheric temperature passing over pipes containing compressed air at temperature of 220 degrees below zero, would transmit to the cold air enough heat to bring it up to 60 degrees above zero or normal temperature. Yet such is the fact, and this is the fact that Hodges claims to have discovered, and after his discovery it is the fact employed by the defendant in reconstructing the theory upon which it now builds its compressed-air locomotives.

Without further discussion, we are clearly of opinion that as a re-heating medium to be used on the interheater of a compressed-air locomotive, air and water are not equivalents, and that the adaptation of air as a re-heating medium upon compressed-air locomotives was novel, immensely useful, and constitutes invention.

The next question is, whether, in view of the prior art, Hodges can be credited with this discovery and whether in a method employing it with other steps, there is patentable invention. This raises the defense of anticipation.

When this defense was reached, there arose a sharp controversy as to the art to which the alleged invention of Hodges belongs. The complainant contended that Hodges' invention is included only in that branch of thermo-dynamics which has to do with the motion of bodies and the creation of power by heat. The defendants contended that Hodges' invention is within any art which has to do with the mechanical action, uses and relation of heat, and is not restricted to an art in which heat is employed as a power.

In support of their defense of anticipation, the defendants cited ten patents, all of which, it is claimed, are within the art to which Hodges' discovery directly relates. We are rather inclined to subscribe to the contention of the complainant that the patents cited belong to four arts, in which the patents may be grouped as follows:

First: The art of cooling internal combustion engines. In this art is Worthington Patent No. 917,232. This patent provides a system of cooling a combustion engine by directing against it a current of air of a lower temperature than that of the super-heated engine. There is here no suggestion of the transmission of heat units to supply power by expansion of compressed air. Therefore, this art has no relation to the art to which Hodges' invention belongs.

Second: The art of generating power by means of vaporized liquids. To this art belongs the Geisenberger and Cherpit British Patent No. 3,056 of 1871. This patent is concerned with an elaborate system for vaporizing liquids, using the vapors to do work in cylinders and then condensing the vapors in a closed system. We see no bearing of this invention upon the invention of Hodges.

Third: The art of refrigeration, within which are the following patents: Smith, No. 596,386; Hill, No. 244,601; Dickerson, No. 655,-148; Palmer, No. 344,006.

Fourth: The art of generating power by compressed air, in which Hodges' patent directly belongs, and in which fall the following patents: Reynolds & Haupt, No. 222,950; Bushnell, No. 137,889; Nutty, No. 745,373; Rix, No. 605,187.

Compressed air was used in both the refrigerating art and in the art of generating power. The theory in which it was used in the former is diametrically opposite to the theory of its use in the latter. In refrigeration, a warm body is made cold by bringing a cold agency in contact with it and withdrawing its heat. Therefore, in refrigeration, compressed air was initially made as cold as possible. In the production of power from heat, a cold element is made warm by bringing a warm agency in contact with it and transferring to it its heat.

Therefore, the compressed air is initially made as warm as possible. In each instance there is thermal conductivity. This is a quality of heat free to be employed in different arts, but when used in different arts, by different means and for different purposes, this one force of nature does not make all arts akin.

The differences in the last two mentioned arts are clearly pointed out in the testimony of Professor Charles E. Lucke. These differences we consider fundamental, and were it not for the especial attention given to two patents in the refrigerating art, cited by counsel and considered with controlling effect by the District Court, we would not be inclined to discuss the question whether Hodges' invention was anticipated by references to the refrigerating art.

These two patents are the Smith and Hill patents before cited, granted for "Apparatus for Cooling and Refrigerating," and in principle are sufficiently alike to be considered together. The object of these patents is refrigeration, which is accomplished by utilizing the cooling effect of expanded air. The apparatus in principle is similar to the ordinary compound compressed-air engine, including a re-heater. In the system employed, the expanded and chilled air from one cylinder is utilized to chill the air of the refrigerating chamber, and this action is repeated through the other cylinder or cooler to increase the cooling action in the chamber, after which the working air is returned through the re-heater to the compressing engine for use through the same cycle. In this process there was developed and obtained a modicum of power used simply to supplement the power of the steam compressors, which is testified to be about one per cent. The District Court was impressed by the disclosures of these two patents for refrigerating apparatus, which developed an element of power, small though it was, and in his opinion the learned District Judge said:

> "Moreover, in the Smith and Hill patents, there is the stated object of obtaining additional work from compressed air by raising its temperature. While the amount of power produced in the Smith and Hill apparatus would perhaps be negligible as an effective sole means of producing power, yet this is a difference of degree and not of principle."

The controlling theory of the Smith and Hill apparatus is refrigeration, produced by the cooling effect of expanded compressed air. We admit, as we must, that in performing the refrigerating function, the apparatus of the patents develop about one per cent. of power, and agree with the conclusion of the learned District Judge "that the amount of power produced in the Smith and Hill apparatus would perhaps be negligible as an effective sole means of producing power." We feel, however, that although in these patents there was present the nebula of Hodges' idea, they did not disclose to Hodges or to the art that the same means would be effective as the sole means to produce power in a compound compressed-air locomotive, and did not teach the art that in a compound compressed-air system, the surrounding atmosphere is a sufficient re-heating medium to raise the expanded and chilled working air back practically to its normal temperature, and thereby develop at least fifty per cent. of power.

It does not appear that the refrigerating apparatus of Smith and Hill were ever in use, and the Smith and Hill patents are employed merely as paper anticipations of the patent in suit. If the disclosure made by Hill in 1881 that some power could be derived from the use of an interheater such as he employed, and if the disclosure made by Smith in 1897 with respect to the negligible quantity of power developed in an interheater such as he used, were disclosures of value or disclosures at all, we believe that those who then and ever since have been working upon the problem would have used them in its solution. We are of opinion that Hodges' invention was not anticipated by the Smith and Hill patents.

There are four patents in the art to which the invention of Hodges, without question, directly belongs. The first is the invention of Nutty, which includes a re-heater, but in the performance of its function, the air is artificially heated. This distinguishes Nutty's invention from Hodges' for reasons that are too obvious to discuss.

The Bushnell patent is for compressed air motors. The inventor utilized a part of the power developed by the motor to operate an air pump, and so provided hot compressed air which he injected into the escape from the compressed-air engine to melt away the frost and ice. There is no similarity between this invention and the invention of the patent in suit.

The invention of Reynolds and Haupt relates to a pneumatic motor "for driving locomotive engines or carriages on tramways." The invention includes an interheater. The heating medium was hot water, heated of course at the cost of fuel, and to be re-heated when chilled or frozen by the transfer of its heat units to the compressed air. This invention did not anticipate Hodges.

The patent of Rix is for a pneumatic pumping engine. It is a stationary engine, and discloses the customary multiple expansion cylinders and an interheater. The re-heating medium employed by Rix is water at normal temperature. As the water is pumped it passes through the re-heater, and the heat from the flowing water is transmitted to the chilled compressed air, and raises its temperature to the proper degree for re-expansion. Water as a re-heating medium upon a stationary pump is an entirely different thing from water used for that purpose on a moving engine, thereby distinguishing this patent from Reynolds and Haupt. Water is used upon this stationary engine in the same way, and certainly with the same object and result attained by Hodges by the use of air. It is claimed by the defendants that water is an equivalent of air when employed as a medium to raise the temperature of compressed air, without regard to the difference between its use in stationary and movable engines, and therefore the use of water as a re-heating medium in the Rix interheater on a stationary engine is an anticipation of Hodges' use of air in the re-heater of a portable engine. We recognize that water is a successful medium to be employed in a re-heater on a stationary pumping engine. It does not have to be heated or transported. It is at hand and may be successfully used as long as it is present and made to flow at its normal temperature over the chilled parts.

But this contest is not between stationary engines and portable engines. It is between locomotives, and we desire neither to express an opinion nor suggest a doubt concerning the equivalency of water and air as heating media in stationary engines. But we are satisfied that water and air are not interchangeable heating media on moving engines and therefore are not equivalents. Water has to be brought to the engine in ever renewed quantities, while air brings itself in limitless supply. Water will freeze unless re-heated or replenished. Air will not freeze, and as long as it moves it brings fresh heat to the point of contact. We are therefore of opinion that the invention of the patent in suit, so far as it applies to locomotives or moving engines, is not anticipated by the Rix invention.

The third ground of the invalidity of the patent in suit urged by the defendants, is that the method set forth in the claims was in public use more than two years prior to the filing of the application for letters patent. This is not seriously urged. At all events, it is not supported by the testimony.

[2] The remaining defenses grow out of the history of the patent in suit and of another patent previously granted to Hodges.

Hodges' prior patent No. 868,560 was granted on October 15, 1907, for "Interheater for Compound Compressed-Air Engines." The prior patent was for an apparatus; the patent in suit is for a method. The prior apparatus patent contained five claims for an interheater, four of which specified means for drawing a current of atmospheric air through the interheater. These five claims were rejected by the examiner upon reference to several prior patents already considered in this case, namely Reynolds and Haupt, Nutty, Palmer, Dickerson, Geisenberger and Cherpit, all of which contained the mechanical feature of an interheater. The rejection of the canceled claims was affirmed on appeal by the Court of Appeals for the District of Columbia. The patent was eventually granted upon claims that restricted its scope to the particular mechanical construction disclosed by it. Within two years of the grant of the apparatus patent, Hodges applied for and was granted a method patent, which is the patent in suit. It is testified, and for the purpose of this discussion it may be assumed to have been proven, that claims 1 and 4 of the method patent embrace the disclosures of the rejected claims 1 to 5 of the apparatus patent, in so far as they relate to the function and operation of the apparatus of that patent. It is contended by the defendants that claims 1 and 4 of the patent in suit are invalid because they are coextensive with the rejected claims 1 to 5 of the prior apparatus patent, and because the method set forth in these claims is only the necessary method of operation of the apparatus disclosed in that patent. In other words, it is contended that the adjudication of the claims in the apparatus patent makes invalid similar claims in a method patent subsequently granted, and that after the adjudication upon the claims of the apparatus patent, the defendant was estopped to apply for and the Patent Office was without power to allow, similar claims in a method patent.

It is further urged by the defendants that the grant of the method patent, which is the patent in suit, was made by the Patent Office without knowledge of the proceedings and adjudication respecting the prior apparatus patent. This, we think, is successfully controverted.

As stated by the District Judge, it is a well established principle that a patent for "an apparatus in which a new method is employed does not preclude the patentee from later obtaining a method patent for the process." This principle has been distinctly announced by the Supreme Court in Steinmetz v. Allen, 192 U. S. 543, 561, 24 Sup. Ct. 416, 422 (48 L. Ed. 555), in which the court said:

"If the classification of the statute makes a distinction between the different kinds of inventions—between a process and an apparatus—and requires or permits a separate application for each, it would seem to follow irresistably that an application and patent for one would not preclude an application and patent for the other, and the order of the application would not affect the right which the law confers."

In the case of Leeds & Catlin v. Victor Talking Machine Company, 213 U. S. 301, 318, 29 Sup. Ct. 495, 500 (53 L. Ed. 805), the Supreme Court expressed itself:

"A process and an apparatus by which it is performed are distinct things. They may be found in one patent; they may be made the subject of different patents. So may other dependent and related inventions. If patented separately, a foreign patent for either would not affect the other."

While the District Court recognized this to be the law, it nevertheless felt bound by the adjudication of the Court of Appeals for the District of Columbia in affirming the rejection and cancellation of what may be termed the method claims in the Hodges' apparatus patent. But that adjudication related to claims for an apparatus patent. Whatever might be gathered by reflection from the opinion of that court as to what it would do with similar claims in a method patent, its decision did not extend to a method patent. The method patent was granted, it is testified and we must assume, with full knowledge on the part of the Patent Office of the litigation and decisions concerning the apparatus patent. As an inventor is entitled to apply for both a machine patent and a method patent, the Patent Office has power to grant both, if in both there is disclosed patentable invention.

The first appearance in court of the Hodges' method patent was in the District Court seeking construction of its own terms. We think its terms should have been construed without regard to the consideration given to similar terms contained in an application for another patent for a different thing, and are therefore of opinion that claims 1 and 4 of the patent in suit are not controlled or made invalid by the procedure and decisions respecting claims 1 to 5 in the prior patent of the same inventor.

We hold that claims 1 and 4 of Hodges' patent No. 953,334, for method of operating compound compressed-air engines, are valid in so far as that method is employed upon locomotives, and that the same are infringed by the locomotive of the defendants.

The decree below is reversed.

HITCHCOCK v. AMERICAN PLATE GLASS CO. et al.

(Circuit Court of Appeals, Third Circuit. July 22, 1915.)

No. 1883.

PATENTS ⟹328—VALIDITY AND INFRINGEMENT—PROCESS AND APPARATUS FOR GRINDING PLATE GLASS.

The Hitchcock patent, No. 1,056,416, for a method of applying abrasives to apparatus for grinding plate glass, by which the sand is graded as to fineness for use in the successive grindings, discloses a process novel in practice, useful in result, and inventive in character, and is valid, as is also patent No. 1,056,415, to the same patentee, for apparatus for practicing the process. Both patents also *held* infringed.

Appeal from the District Court of the United States for the Western District of Pennsylvania; Charles P. Orr, Judge.

Suit in equity by Halbert R. Hitchcock against the American Plate Glass Company and James W. Cruikshank. Decree for defendants, and complainant appeals. Reversed.

For opinion below, see 216 Fed. 766.

Christy & Christy, of Pittsburgh, Pa., and F. P. Fish, of Boston, Mass., for appellant.

C. M. Clarke and F. W. H. Clay, both of Pittsburgh, Pa., for appellees.

Before BUFFINGTON, McPHERSON, and WOOLLEY, Circuit Judges.

BUFFINGTON, Circuit Judge. In the court below Halbert K. Hitchcock filed a bill against the American Plate Glass Company and James W. Cruikshank, charging them with infringement of four patents, viz.: No. 934,442, granted September 21, 1909, for grinding apparatus; No. 934,612, of same date, for grinding apparatus; No. 1,056,415, of March 18, 1913, for apparatus for applying abrasives to grinding apparatus; and No. 1,056,416, of same date, for method of applying abrasives to grinding apparatus. On final hearing the court below, in an opinion reported at 216 Fed. 766, held the defendants did not infringe. From a decree dismissing his bill, Hitchcock appealed.

The case concerns grinding plate glass. Such glass is first cast in large rough sheets, after which such sheets are imbedded in plaster of paris on the table of a large grinding machine, and are ground smooth by the use of sand as an abrasive. Rough, coarse sand is used for the first stage of grinding, and sands of finer grades are successively used as the surface becomes more finished, until the glass is ready for polishing, which is done by the use of other materials not here involved. But not only is sand of different fineness required as the grinding process goes on, but such sand must be applied with such

volume of water as will, on the one hand, give the fluidity necessary to insure diffusion of the sand over the grinding table, but, on the other hand, it is necessary to avoid such fluidity as will wash the sand from the grinder. The present case involves a process and apparatus for mechanically separating the sand into the different grades of fineness required at successive grinding stages, and of feeding such grades in proper fluid condition to the grinding table as such grades are needed. The grinding machines used by both parties are alike, and are not involved in the present case, further than that a general description of them is necessary to a proper understanding of the sand-selecting and sand-feeding devices used by the patentee and the alleged infringer.

As stated above, the cast glass sheets are placed on a large, circular, revoluble, grinding table, and are securely held in place by imbedding them in plaster of paris. Above the table is a cross-beam, from which depend large runners, on the underside of which are cast iron shoes or blocks, which rest loosely on the surface of the imbedded glass. When the table is rotated at high speed, and sand and water are thrown upon it, the runners are rotated frictionally by the table, and an abrasion sets in, which gradually grinds the glass to a smooth surface adapted for the subsequent operation of polishing. Prior to Hitchcock's devices the practice was to shovel coarse, ungraded sand into a V-shaped trough, which was above and inclined to the table. This sand was washed by a hose onto the table. A gutter surrounded the table, into which the sand and water, as the grinding proceeded, were carried by the rotation of the table. From this gutter the mixed water and sand ran into a trough in which were several cross-barriers, which, as the mixture passed, trapped the heavier and larger grains of passing sand, while the lighter grains passed onward. Such sand grading was not uniform. In the first grinding operation, called facing, ungraded, coarse sand was carried to the grinding table by simply turning on a hose. In the several subsequent operative stages clear water was turned on the table, and the finer grades of sand were thrown on in handfuls by the operative. The expense, efficiency, and character of the product depended on the skill and care of the operatives. There was no product uniformity.

Beyond the first barrier in the trough was usually placed a second, which served to trap a second body of sand from the passing water. This was called "canal sand." After the facing operation, which usually took an hour or more, was finished, the glass and runners were carefully drenched with clear water to remove all coarse sand, and then, while a stream of clear water continued to play on the glass, operatives threw handfuls of "canal sand" on the table. This use of proper quantities of canal sand constituted the second step of the process. Beyond the "canal sand" barrier, the trough from each individual grinding table led to a common trough, which received the currents of water and finer grains of sand from all the tables of the plant. This common trough led to what was called the "fine sand house." This latter had a long, rectangular basin, or pair of basins,

communicating with the trough at one end and having an overflow at the other. This basin was divided by overflow barriers into several compartments of substantial length and about three feet deep. In these compartments the sand was caught in successively finer grades as the water passed over the barriers. These different grades were shoveled into separate bins and were used in successive smoothing operations, being thrown in handfuls upon the watered glass surface as in case of the "canal sand"; that is, after the "canal sand" operation was completed the tables and runners were again carefully drenched with clear water, after which the coarsest "sand house" sand was then thrown on for the first smoothing operation. After about 10 minutes the table and runners were again drenched, and the second grade of "sand house" sand was used. After about the same time the tables and runners were again washed off, and the finest grade of "sand house" sand was thrown on and used. This completed the sand-grinding operation. It will be observed that in this process the velocity of the water at the particular instant, and not alone the weight of a particular sand particle, determined whether such particle would or would not be carried over the barrier it was approaching; and it will further appear that the velocity of the water was affected by the amount of sand over which the water passed in the several compartments being deep or shallow. It will also be apparent that the presence of the finer grades of sand on the table during the facing operation was no help, and indeed a hindrance, to the effectiveness of the grinding sand. It is also apparent that, where coarse grains were carried over to the finer grades, such coarse grains might score and scratch the glass in the smoothing operations. In that regard the proof is:

"As the water containing sand in suspension passed through this ditch, the coarse grades would settle out in the first compartment, and the fine grades in the succeeding compartments. The settling, however, had a fatal defect; for, when the pits were empty to start with, there was a current of water and sand 2½ feet deep, while, when the pits were filled, there was a current of only about 4 inches flowing across the pits. This resulted in the first pit filling up much more rapidly than the succeeding ones, and a great quantity of very fine sand and mud being entrapped in the first compartment."

This defect was so serious that resort was had to a partial corrective, by use of what is called a "laxiavator." The proof in that regard is:

"In order to partially overcome this difficulty, there was provided what is called a laxiavator. The sands were shoveled out of the pits in the fine sand house into water contained in this laxiavator, where they were thoroughly agitated, and the mixture was then allowed to settle for approximately eight or ten minutes. Then the water and sand above an opening in the side of the laxiavator was drawn off through the opening into a settling box, where the sand settled and the water was afterward removed. The mixture thus withdrawn was in large proportion fine sand, but had some of the coarser grades contained in it. The laxiavator was then again filled with water and sand, and after agitation the sand was allowed to settle for perhaps three minutes, after which the mixture above the opening was withdrawn into another box; the sand settling in this box and the water being again removed. The

operation was then again repeated, with a settling period of a minute or a minute and a half, and the sands above the opening, which were the coarsest of the three grades, were drawn off into a third box. Thus were obtained the three grades of finishing sands to which I have alluded."

The practice of using ungraded sand in the first or facing operation resulted in the objectionable effects due to particles of pure quartz or shot. In that regard the proof is:

"The continuous shoveling of the sands into the hoppers and washing them out resulted in the shot remaining behind each time, while the finer and better grades of sand were washed out first. When the hoppers were washed out just previous to starting the finishing operation, there would be a large accumulation of this coarse shot in the bottom of these hoppers, which, being fed onto the glass when its surface was practically plane, made a very much rougher ground than would have resulted from the average size of the sand grains used in the operation."

So, also, in the finishing process, there was an operative defect due to the process of "sand house" sand selection. In that regard the proof is:

"In the finishing operation there was a defect, in that the fine sands taken from the fine sand house cemented together in a sort of puttylike structure, and the grinders (i. e., the workmen) would not break up these masses, but threw them on the table in large quantities, so that, instead of the grains passing beneath the runners, they were largely thrown in the ditch."

The testimony shows that the use of the proper amount of water, as well as the proper grade of sand, is also a substantial factor in proper grinding. In that respect the proof is:

"As to the function of the water in grinding plate glass, the grinding apparatus crushes and breaks up the sand, and it is necessary to get rid of this pulverized sand in order to present a clear surface for the fresh sand to work on. If the amount of water used is too small, the table is covered with a pasty, sticky abrasive, producing excessive friction on the glass, and tending to loosen it on the table. If too much water is supplied, it softens the plaster of paris, so that the glass is likely to be thrown off the table by centrifugal force. When the glass is water-soaked and loose on the table, it springs up, thereby sucking part of the abrasive under the glass. It being essential, before finishing the surface of the glass, that all the previous grades shall be washed off, this can then not be done thoroughly, and when the runners force the glass down in finishing, some of the coarse grains are expelled from beneath the glass and spoil the finish. It is therefore very important, in order to get a good, smooth glass, that these defects should not occur."

These defects had long existed in the art, but they were regarded as unavoidable evils. Indeed, the patent art discloses no attempt to solve them. In 1904 the complainant, who was a consulting engineer, began experimenting with a view to improving the process of grinding plate glass; his attention having been called "to the great difficulty they had in getting a proper surface on the glass, so that it would polish and give a fine luster, without having defects injuring its commercial value."

Hitchcock testifies he started with the idea that the defects were largely due to inaccurate grading, which he began to and did improve and radically change. He, however, discovered that the difficulty was not alone in grading, but also in feeding the sand. Without en-

tering into a detail description of the protracted stages of advance and improvement shown in his various patents, we may say his work culminated in his apparatus patent, No. 1,056,415, granted March 18, 1913, and his process patent, No. 1,056,416, of like date. The radical nature of Hitchcock's departure from the prior art consists in his substitution as a sand-assorting agency of a vertical water flow in a confined channel for the horizontal water flow in an unconfined channel of the old practice. These changes he made possible by substituting for the trough of the old art a conical chamber with a vertical stream. This conical structure he disclosed in the auxiliary sand grader shown in the accompanying figure, taken from patent No. 934,441 of September 21, 1909:

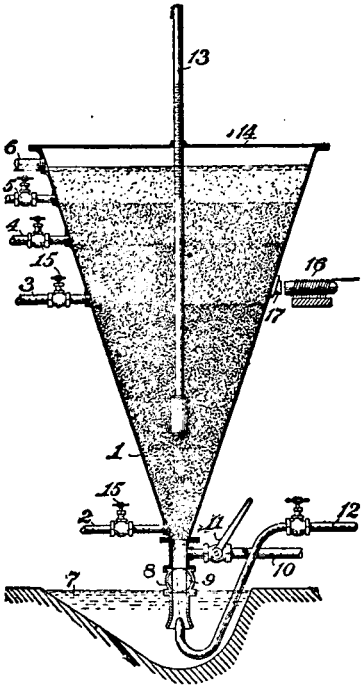

This patent is not here in issue, but we refer to it as illustrative of the efforts to solve recognized defects in the plate glass grinding art, as throwing light on the radical step which Hitchcock took from previous practice in the evolution of his perfected machine, and because the working of the vertical current quoted below is by reference embodied in the process patent here in issue. Such workings of a vertical stream and the effect of the confined channel of a cone in sand selection are pointed out in this patent as follows:

"The process may be carried out in a number of ways with the above-described apparatus, one of which is as follows. The pit 7 being filled with a mixture of material and water, steam is admitted to the pipe *12*, thus sending a stream of water upward through the pipe *8* and tank *1*, and the particles gradually rise until they reach the positions at which they are in equilibrium. These positions of equilibrium lie at the points at which the upward velocity of the water from the pipe *8* equals the velocity at which the particles would normally fall through the fluid if there were no upward flow. It will be seen that the velocity of flow through the tank decreases as the distance from the bottom of the tank increases, because of the increased area of the tank at the higher levels, and also from the greater tendency of the larger particles to reduce the interstitial spaces, this in itself increasing the velocity of flow at the lower levels, and that such velocity is inversely proportional to the area of the said interstitial space at any given point. As the falling velocity of a particle depends upon the ratio of its weight to the surface which is exposed to the resistance of the water, and this ratio for materials of substantially the same specific gravity increases with the weight of the particles, the particles of material composing the contents of the tank will arrange themselves in a series of grades with the average size and weight diminishing and the interstitial area increasing as the distance from the bottom of the tank increases. The inflow of water through the pipe *8* is

continued until a certain predetermined density of the mixture in the tank as indicated by the hydrometer is secured, at which time the valve *9* is closed and the valve *11* opened, admitting water under pressure from the main, which flow of water from the main is necessary to maintain the particles already in equilibrium at their proper height, and to carry to their proper positions the finer particles last carried in from the pit and mixed through the tank; it being understood that the flow of water with the valve *11* open is preferably the same as that which occurs when the valve *9* is open, in which case one flow takes the place of the other. The upper valve *15* is opened and the contents of the stratum above the pipe *5* is withdrawn through such pipe *5*, after which the next lower stratum is drawn off, and then the next, until the tank is emptied. The various strata withdrawn are conducted to proper receptacles for settling. This withdrawing operation continues until all the material in the tank is withdrawn, at which time the valve *11* is closed and the operation of filling the tank and securing the proper stratification of the various grades of material is repeated. It will be apparent that all of the material in any stratum is not of exactly the same degree of fineness, but that the difference between the finest and coarsest material in the stratum is fixed between predetermined limits. The proportions of the tank and the flow through the pipe *8* are so arranged that none of the material, which it is desired to save will pass out of the overflow *6*, which overflow *6* carries off, however, the mud which is mixed with the material or particles too fine for use, and the surplus water introduced into the tank."

It will be noted that this device had to be emptied and then refilled. But in the perfected machine of his later patents Hitchcock embodied and utilized the upward stream and the conical vessel with other features, so as to secure an automatic cycle of continuous operation in which the conical graders, instead of being emptied and refilled, were in continuous operation. With this perfected machine which we will now describe, we are satisfied, the plate glass grinding art passed from the old inaccurate method of sand grading and the old method of sand hand feeding to an automatic method of effective, uniform machine grading and machine feeding, which brought about uniform and better results. Hitchcock's perfected machine is shown in the accompanying drawings:

FIG. 1.

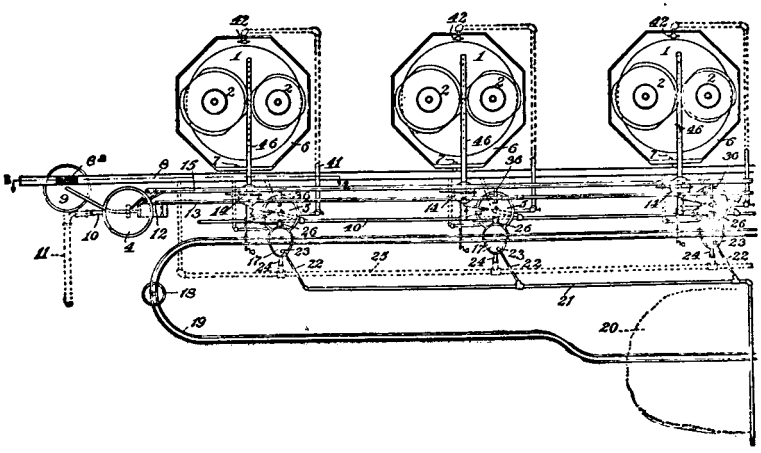

Without entering into details it will be noted that there are three grinding tables, each provided with a conical coarse sand grader *5*, and a conical fine sand grader *14*. Each table is surrounded by the usual gutter connected to a common ditch *8*, through which the already used and mingled sand and water flows to the sump pit *9*, through the screen *8a*. Near the sump pit *9* is a conical preliminary grader *4*, into the bottom of which is continuously pumped from the sump pit sand and water. In grader *4* the preliminary grading is done, the separated coarse sand and water passing onward in cycle to the individual tables' conical coarse-sand grader *5* through the trough *15* and the separated fine sand and water passing onward in cycle to the same individual tables' conical fine-sand grader *14* through the trough *13*. Overflows to allow water and mud to escape are provided for each. Fresh sand is supplied from time to time from hoppers *17* located adjacent to each coarse-sand grader *5*. The functional purpose of the machine generally and of its different features are thus set forth in the specification:

"The object of the present invention is to provide apparatus for grading and applying such materials whenever the supply to and the withdrawal of the material from the grading vessel goes on simultaneously; the finer material being held back during the roughening operation for the subsequent smoothing and finishing operation. Further objects of the invention are to provide apparatus whereby the proper ratio of the water to the sand or other abrading material may be regulated. * * * The present invention has for its purpose to provide simpler and less expensive apparatus in which a continuous uninterrupted cycle with the abrading material in suspension or mixed with the liquid is carried on, so that the materials can be handled at less cost and labor than the apparatus shown in my prior patent. * * * Each of the grading vessels *5* is preferably of the shape shown in the drawing—that is, of inverted cone shape—and is adapted to receive the material mixed with water from above. The grading is preferably effected by maintaining in such cone an upward flow of water, whereby the material is divided into various strata, depending upon the ratio of the weight of the different particles of material to the resistance offered to falling down in the upward current of water, all as described in my patent No. 934,441, above identified. The upward flow of water is provided through the lower end of the cone by means of supply pipe *40*. The action of the upward flow of water in the conical vessel separates the material into various grades; the coarsest being at the bottom, and successive layers decreasing in coarseness toward the top. * * * In order to separately withdraw the grades from the grading vessel, there are projected into said vessel a series of pipes *42*, *43*, and *44*, in number depending upon the number of grades to be separately withdrawn. The lower inner ends of these pipes are of different heights in the grading vessel, and each ends approximately in the strata or zone of the grade which it is desired to withdraw through that pipe. All of these pipes extend through the side of the cone at substantially the same level, and the outer ends bend down somewhat. * * * It is not necessary to withdraw all the grades lying between any two planes before taking out or beginning to take out the upper or finer grades. This enables the finishing operation to be brought to a speedy conclusion; whereas, with the prior apparatus, where the different grades were withdrawn through a common outlet, it was necessary to entirely withdraw all the grades before the finest could be taken out. * * * The withdrawal through any one pipe can be stopped whenever desired, and any one of the higher pipes opened. This enables the material to be withdrawn in a series of steps or jumps and enables the finishing operation to be started at any time and brought to a speedy conclusion."

The device also automatically mixes proper proportions of sand and water. Such mixture is thus secured:

"In the application of abrading material, and particularly for grinding and smoothing plate glass, it is advantageous to vary the amount of water mixed with the sand of various grades. With the coarser grades a small ratio of water can profitably be used, while with the finer grades the ratio of water preferably should increase. In my patent hereinbefore described, this regulation of the ratio of water to the sand for the different grades was secured by means of a float located in a suitable vessel and controlling the valve which controlled the amount of water entering the grading cone. In the apparatus illustrated in this application this regulation is automatically effected without such float and regulating valve by properly proportioning the shape or lines of cone *5* and properly locating the points of withdrawal of the different grades therefrom; that is to say, the different heights at which the withdrawal pipes terminate in said cone. By properly designing the shape of the cone and having the several withdrawal pipes project down into the cone to exactly the right points, I am enabled to automatically and properly regulate the ratio of water to the sand, so as to secure the increasing ratio of water to the sand for the finer grades. This considerably simplifies the apparatus over that illustrated in my prior patents."

It should here be noted, as bearing later on the question of infringement, that the large or preliminary grading cone *4* of Hitchcock's device, while equipped to grade five different grades of sand, only utilizes such selective capacity to the extent of separately withdrawing the finest grade of sand. This latter grade is at once taken away and conveyed to the fine-sand cone. All the other four grades pass from said cone *4* and intermingle in passing to cone *5*, where they are regraded and separately withdrawn as needed. As stated in the specification:

"The purpose of taking out of the cone *4* the several independent grades through pipes *70*, *71*, *72*, and *73* is to remove as quickly as possible all of the coarser material and thus insure having the uppermost grades which escape through outlet *12* very carefully selected. As a consequence, a very careful grading or selection of the upper or fine material is secured. Each of the fine sand cones *14*, therefore, receives its supply from the (s)top stratum of the preliminary grading cone *4*."

The cycle of continuous operation of the apparatus as a whole and the functions and operations of the different parts are thus described in the specification:

"In the use of the apparatus the sand is deposited in hopper *17*, is washed out of the same by opening valve *34*, and passes, mixed with water, into the grading tank or cone *5*, where it meets an upward current of water of gradually diminishing velocity toward the top, and settles down in the water in said tank until it reaches a state of equilibrium, which depends upon the size and physical characteristics of the particles of sand, so that they are thereby divided or separated into several grades or sizes. The grades are withdrawn and conducted separately to the grinding table by opening the appropriate valve *47*, *48* or *49*, controlling the several withdrawal pipes from said cone. The sand and water from the grinding table escapes into gutter *8* and passes then to sump *9*. On the grinding table more or less of the sand is pulverized to a degree of fineness which incapacitates it for further service as an abrasive. The sand, mixed with water, is drawn from sump or pit *9* and discharged upwardly into the preliminary grading tank or cone *4*. The stream of water carrying the same up into the cone gradually diminishes in velocity upwardly, and the different particles of sand seek their strata of

equilibrium the same as in the tank or cone *5*, and being thereby separated into a series of grades or sizes. The very fine particles, too fine to be of use, scum, dirt, and other impurities, wash out through the overflow *10* to the sewer. The coarser grades of material are withdrawn from this tank through discharge pipes *70*, *71*, *72* and *73*, being returned to the grading table *5*, while the finest grade is deposited in the finishing cone *14*, to be withdrawn therefrom whenever the grinding operation has reached the stage for the final or finishing operation. During the coarse grinding or roughing, the coarser grades (or even the coarsest grade only) are taken from the vessel or cone *5* to the table, and simultaneously the material from all the grades, except the finest in cone *4*, are returned to the cone *5* for regrading, and fresh material is also supplied to the cone *5* from reservoir *17*; this supply being controlled by the density of the mixture in the cone *5*. When the roughing or facing operation is substantially completed, the supply of material to the cone *5* is cut off by closing valves *34a* and *37*. The operation then continues with the withdrawal from the cone *5* of the several grades in succession, or by steps or jumps, as above described, and to the extent desired or necessary, the material becoming finer and finer, and after this has been carried far enough, further withdrawal from cone *5* ceases, and the finishing or smoothing is completed by withdrawing entirely from the fine sand cone *14*, when, again, the material withdrawn gradually increases in fineness from the bottom to the top. During the rough grinding there is a continuous circulation of the abrading material in water, from cone *5* to the grinding table, thence to pump *9*, thence into cone *4*, and thence by trough *15* back to cone *5*. The portion of material too fine for further use is washed by the overflow into the sewer, and the finest usable grade is conveyed to the fine-sand cone *14* for the finishing operation. Simultaneously therewith fresh material is being added to cone *5* to make up for the fine material washed into the sewer and that taken to the fine-sand cone."

The specification ends with this general summary of the disclosure:

"With this apparatus there is a continuous and uninterrupted cycle of the abrading material, constantly or practically constantly, in a state of suspension, or at least mixed with water. No storage place is necessary or required, and therefore the labor of handling is reduced practically to a minimum, and the apparatus is of less size and less expensive than where storage must be provided for. The apparatus is so designed that the graded material is withdrawn from the grading tanks and is discharged into said tanks simultaneously; i. e., both operations are going on at the same time, but without interfering with the accuracy of the grading. This does away with the necessity of storage places or tanks, and permits the use of very much smaller and less expensive tanks or cones than with the prior form of apparatus."

The practical value of this device over the old art is evidenced by the defendants' use thereof, by the strenuous effort to justify such use, and by the uncontradicted testimony. In the latter regard the president of the Pittsburgh Plate Glass Company, a licensee of Hitchcock, testified:

"As to any saving of labor and materials brought about by the installation of this apparatus, I have never made figures on that myself; but those in our factories who are in a position to know have estimated the savings at approximately $150,000 a year. In addition to the saving in cost, the product is very much more uniform in finish. * * * There had been in the past year a great deal of trouble through lack of uniformity in finish, due to imperfections in apparatus that had been devised to secure a uniform grading.

This idea appealed to me, because it seemed to me it would provide a uniform condition; the condition could be controlled and maintained uniformly. The original idea that appealed to me was not so much that it was going to save money in operation as that it was going to produce uniform control. Nobody ever has made plate glass of a uniform character, and nobody does do it even now."

After thorough consideration we have reached the conclusion that the process disclosed by Hitchcock in his patent No. 1,056,416 was novel in practice, useful in result, and inventive in character, and that the patent issued to him therefore, as well as patent No. 1,056,415, granted to him for an apparatus for practicing such process are valid.

We turn next to the question of infringement. The charge of infringement of both said process and apparatus patents is predicated on the defendants' use of the device shown in the accompanying drawing:

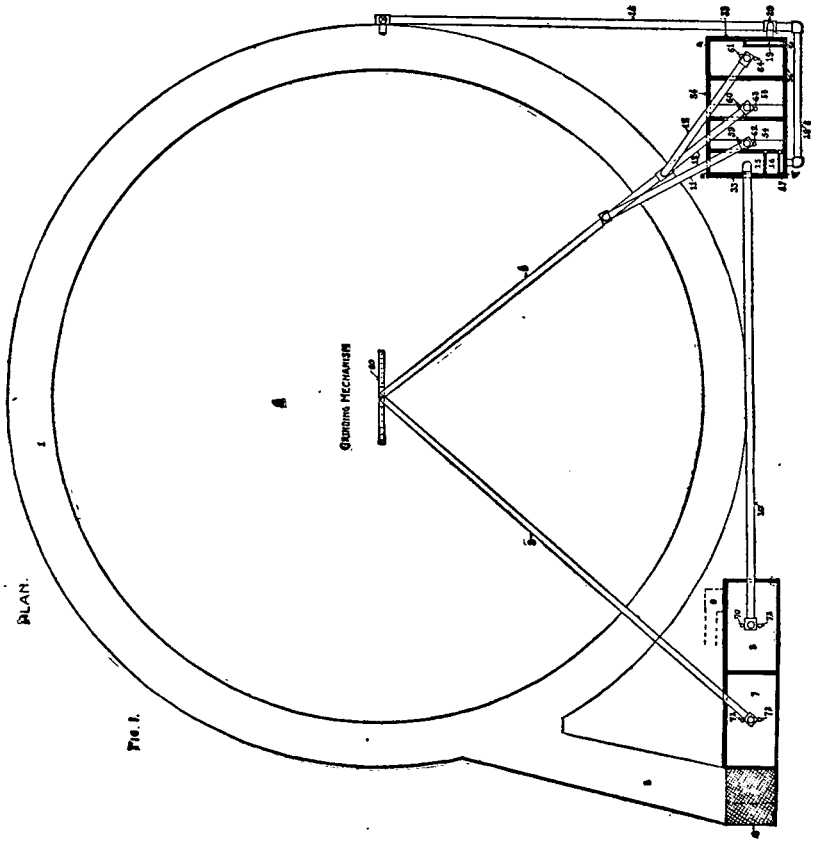

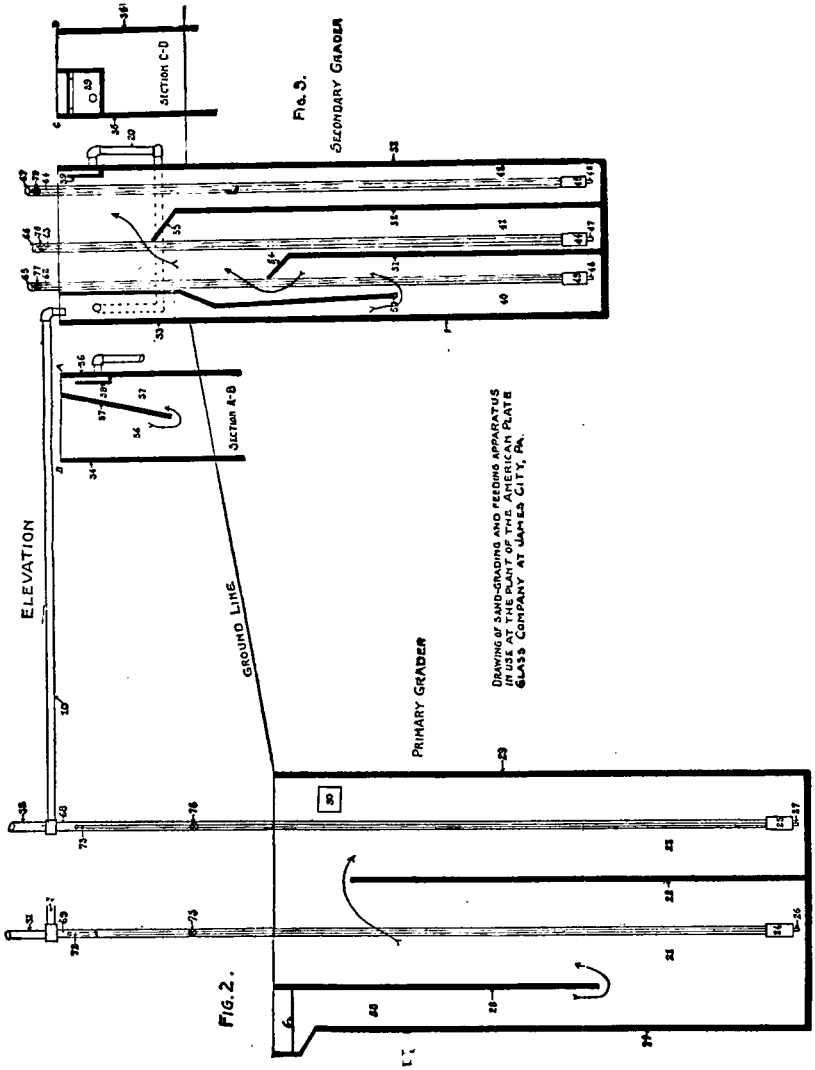

The upper portion is the grinding machine in common use, and the lower shows the alleged infringing grading and feeding mechanism. These are sunk in the ground, and as the primary is lower than the secondary grader, it will be evident that the sand in the primary grader has to be elevated from one of its compartments to the table and from the other to the secondary grader, and also the mixed sand and water in the several compartments of the secondary grader must be elevated to the tables as needed. The mixed sand and water from the sump pit enters at the upper left-hand corner of the primary

grader, and passes down its left side to the right, around the lower end of partition *28*, thence up the passageway between partitions *28* and *22*, and over the top of the latter partition. From the first compartment of the primary grader such coarse sand as is there needed is pumped through the pipe *75* to the grinding table. From the second compartment such sand and water as have passed the comb of partition *22* are pumped through pipe *76* to the secondary grader, where it enters the first compartment, passes the lower end of partition *50* in compartment *40*, in which latter such sand as is too heavy to rise over the comb of baffler *54* on partition *51* remains in compartment *40* and is pumped to the table as needed through pipe *77*. The remaining mixture of sand and water which passes the comb of baffler *54* continues its flow toward the opening made by partition *50* and the comb of baffler *55* at the top of partition *52*. Such sand as is too heavy to rise over the comb of baffler *55* remains in compartment *41* and is pumped to the table as needed through pipe *78*. The remaining mixture passes over the baffler comb *55* into partition *42* and is pumped to the table through pipe *79*.

In this construction we note, first, that the sand selection agency of the device lies in its vertical water flow. The extension of partition *28* downward and of *22* upward makes a verticle cycle of continuous motion as the normal operation of the grinder requires more sand from the secondary grader. Moreover, such forward movement as there is in the primary grader enters a wider channel at the foot of partition *28*, between partitions *28* and *22*, and between the top of partition *22* and the ground line, than the opening where it entered the chamber between the chamber side *74* and the foot of partition *28*. The same expanded and rising channelway is found in the secondary grader. The cycle passes down the narrow channel between side *49* and partition *50* into the wider opening between the lower end of partition *50* and the floor of the chamber and the gradually widening channel formed by inclined partitions *50* and *51*. From the narrowed opening formed between partition *50* and the baffler *54* of partition *51* the cycle passes to the wider space between partitions *50* and *52*, and through the narrowed opening formed by partition *50* and baffler *55* of partition *52* to the broader space above. In this continuous upward cycle it will thus be noted that, while the cone form is not used, its function of affording broader space in the channel as the vertical movement continues is utilized in defendants' structure by partitions which, in the space left between them in some cases, their inclination in others, and their bafflers in others, secure in the cycle the same ultimate vertical current sand selection as does Hitchcock's conical graders. It will thus be seen that, while the conical form of Hitchcock's apparatus has been dispensed with, the gist and life of his process has been studiously retained by the defendants.

So, also, in the order of sand selection, the change by defendant from Hitchcock's order is one of mere engineering choice. In Hitchcock's apparatus the finest grade of sand is first selected and carried away for use as needed in the cycle of grinder operation, while the

coarser grades are left mingled for further sand selection. In the defendants' device this order is reversed. In it the coarsest grade of sand is first selected and is retained for use as needed in the cycle of grinder operation, while the finer grades are left mingled for further sand selection. But, while this alternative difference in order as to whether the coarse or the fine selection be first made does exist, when it comes to the process of sand selection, which is the gist and soul of Hitchcock's contribution to the art, we find the same sand selection process present in both devices. This formal difference in the mere order of sand selection, namely, whether the first segregation be of coarse or of fine sand, relieves the case of the abstruse discussion as to the storage function of chamber *21* of the defendant. When that apparatus made a coarse-sand selection in the first chamber, it necessarily had to hold that coarse sand until, mingled with water, such coarse sand was needed by the grinder. But in the sense, however, of this being a storage such as occurred in the interrupted old horizontal stream process, this temporary storage of his first selected coarse sand can no more be claimed by the defendant to be a break in the cycle operation which relieves it from infringement than the temporary storage by Hitchcock of his first selected fine sand can be charged against him as breaking the cycle of operation, and therefore shearing Hitchcock of the inventive character of his device.

It is clear that in neither case, in defendant's temporary holding of selected coarse sand and in Hitchcock's temporary holding of fine sand, is there any cycle suspension or any sand storage. In neither case has the sand passed from transit to destination and storage. In both they remain in potential transit; in both are they utilized as they are needed, and when needed are indispensable to cycle maintenance. Of them both it may be aptly said: "They also serve who only stand and wait."

Viewed from all standpoints, we are of opinion the defendants' device utilizes the process disclosed in Hitchcock's process patent, and in using that process it has availed itself substantially of the apparatus which Hitchcock disclosed for utilizing that process. This view of the case renders it unnecessary for us to here discuss the other and minor patents involved in the case.

Without, therefore, passing on them, it suffices to say the practical outcome of this case is sufficiently met by a reversal of the decree entered below, and a remanding of the cause, with instructions to enter a decree adjudging patents Nos. 1,056,415 and 1,056,416 are valid, and claims 3, 6, 9, 15, and 20 of the former, and claims 1, 2, and 6 of the latter, are infringed.

BELSTEEL CO. et al. v. LORAIN STEEL CO.

(Circuit Court of Appeals, Third Circuit. November 10, 1915. Rehearing Denied December 15, 1915.)

No. 1955.

PATENTS ⟹328—INVENTION—PORTABLE CROSSOVER.

The Kerwin patent, No. 1,000,270, for portable crossover for use on street railroad tracks, *held* void for lack of patentable invention, in view of the prior art.

Appeal from the District Court of the United States for the Western District of Pennsylvania; Charles P. Orr, Judge.

Suit in equity by the Belsteel Company and John Kerwin against the Lorain Steel Company. Decree for defendant, and complainants appeal. Affirmed.

For opinion below, see 217 Fed. 412.

Frank P. Davis, of Chicago, Ill., for appellants.

C. C. Linthicum, of Chicago, Ill., and J. E. Little, of Pittsburgh, Pa., for appellee.

Before BUFFINGTON, McPHERSON, and WOOLLEY, Circuit Judges.

WOOLLEY, Circuit Judge. This is an appeal from a decree of the District Court of the United States for the Western District of Pennsylvania, dismissing a bill of complaint charging the defendant with infringement of Letters Patent No. 1,000,270, granted August 8, 1911, upon an invention of John Kerwin, and now owned by the complainants.

The defenses are invalidity and non-infringement. If the patent is valid, infringement is found.

The invention relates to portable crossovers. Crossovers are structures for temporarily diverting street car traffic from one track to another during the repair or renewal of a part of a track. They are composed of two parallel tracks of straight rails, connected by one crossover or switch track of curving rails, and when in place the straight parallel rails overlie the straight rails of the permanent tracks. The straight rails are supplied with shoes on their lower side, which rest upon and sometimes grip the permanent rails, and sometimes contain spike plates by which the structure is more securely fastened to the roadbed. The uses of crossovers, the cost and inconveniences incident to their operation, as well as the character of the invention of the patent in suit and the claims therefor, appear in the opinion of the District Court, reported in 217 Fed. 412.

All crossovers contain one general theory of construction, dictated by the character of the use to which they are put. All are composed of two pairs of longitudinal tracks, connected by a track crossing from one to the other. In crossovers of older types, the tracks and connections were separate and detachable parts of the structure, which were assembled and joined together at the point at which the crossover was to be used, and thereafter the parts were disconnected and separately

moved. This is known as a knockdown type. The idea of Kerwin was to make a united crossover instead of several connecting parts, capable of being pulled along the rails as one complete structure without disconnecting its parts or moving them separately.

The elements of the two claims are, (a) pairs of longitudinal rails; (b) pair of crossover rails; (c) rigid construction; (d) means to engage the permanent rails; (e) thereby developing a capacity in the unitary structure to slide longitudinally upon the permanent rails. The first four are elements of the claims. The last is rather a result of the combination of the four.

In the early street railway construction, rails were of the flat or stringer type without a web or base flange, and crossover rails were of the same kind. Subsequently, the girder rail came into use in track construction, and a little later the same type of rail came into use in crossover construction. The parts of the first crossovers were detachably connected for convenience in handling, and also switches and frogs, switch points and mates were separately formed and bolted together so that they could be readily disconnected and moved and again connected in a new position.

Of a type containing many detachable parts, the invention in Galvin's Patent No. 72,185, granted December 17, 1867, and the invention in Beecher's Patent No. 73,071, granted January 7, 1868, are illustrations. The invention of the Du Pont Patent No. 381,874, granted April 24, 1888, the patent under which the defendant has manufactured crossovers for years, also contains detachable parts, as does the invention of Johnson, Patent No. 393,985, granted in the same year. In these patents granted in those early days, there were no connections, rigid or otherwise, between the pairs of longitudinal rails or the pair of crossover rails, either for the purpose of holding them in place or for the purpose of moving them from place to place.

As the art advanced, the detachable parts of the crossover became fewer in number, and by the use of frogs and webs, the structure became more rigid. This is disclosed by the defendant's catalogue of the types of crossovers it manufactured in 1891, 1892, 1894, 1895 and 1896, being improvements and modifications of the Du Pont invention.

The first patent disclosing connections between the rails to effect rigidity and secure its advantages, is the Stiff Patent No. 678,987, granted July 23, 1901, in which the longitudinal tracks are braced by tie rods and their connection with the crossover tracks stiffened by heavy webbed frogs. In the defendant's catalogue of 1904, it appears that the defendant in that year altered the construction of its crossover by adding the tie rod bracing suggested by Stiff, this being the second pronounced advance in increasing the rigidity of the knockdown type of crossovers. In 1905, the defendant manufactured what has been termed in the evidence the "Philadelphia Crossover," which discloses a further stiffening of the longitudinal tracks by the use of webs and of tie rods connected with the rails at angles intended to give them a great rigidity. Tie-rod rigidity was given to the type shown by the defendant's catalogues of 1906 and 1910. As time went on, the detachable parts of a crossover manufactured by the defendant

became fewer in number, until in 1910 the structure, when assembled, consisted practically of two parts, one, a pair of longitudinal rails connected by tie rods, with a part of the crossover rails projecting, and another, a pair of longitudinal rails likewise connected by tie rods, with the remainder of the crossover rails projecting, so that, first, each of the two parts of the structure might be moved as a unit, and second, when moved, might be joined by connecting the extending ends of the rails of the crossover track. This being the state of the art when he entered it in 1911, Kerwin adopted the theory and used the elements of the old structure, but effected a more rigid construction by using a T. rail and uniting all the parts by rigid tie-rod connections.

It would therefore seem that the sole structural novelty in the Kerwin invention is in making the parts of the device more rigid, and that the only novel function of such rigid construction consists in its capacity to slide. The issue reduced to one question is—is there anything patentable in making the structure so rigid that it will slide bodily? It is contended by Kerwin that his structure was the first that could be slid. This is denied by the testimony of the defendant. It is also contended that Kerwin's structure could be more cheaply moved. This is not controverted by the defendant. It is conclusively shown that Kerwin did not invent the first crossover that could be moved as a unit, although we think that it is shown that Kerwin's crossover is more cheaply and perhaps more easily moved.

The controversy respecting the shoes of the structure need not be repeated in this opinion. Shoes on crossovers were old in the art and were used for several purposes, one of which was to decrease friction with the permanent rails when being moved.

The claims of the patent do not cover the movable characteristic of the structure, but are for certain elements of the structure which make it capable of being moved. Of these, the element of rigidity constitutes the sole claim to invention, and claiming invention in the rigidity employed, the patentee relies more upon the degree of rigidity than upon the fact of rigidity. Upon the question whether the increased rigidity of the Kerwin structure constitutes patentable invention, we concur with the conclusion of the learned District Judge, that "there is no invention in making a crossover stronger and more rigid" than other crossovers, even when the result is a crossover capable of being more easily moved. The fact that the result is an improvement over what existed before, does not determine it to be the result of invention, and if the means to produce the improved result are such as not to involve invention, they are then not entitled to be patented. The question remains as before, does invention lie in making a stronger and more rigid crossover. We think it does not, and therefore find the patent invalid.

The decree below is affirmed.

UNITED STATES v. GRADWELL et al.

(District Court, D. Rhode Island. October 23, 1915.)

No. 114.

1. GRAND JURY ⟹5—QUALIFICATIONS OF JURORS.

A grand juror having been duly drawn and summoned for service in a federal court, and at that time, as required by Judicial Code (Act March 3, 1911, c. 231) § 275, 36 Stat. 1164 (Comp. St. 1913, § 1252), having the qualifications prescribed by the state law, does not become disqualified for service because he thereafter loses a property qualification, which takes him out of the class of voters from which jurors are selected under the state law.

[Ed. Note.—For other cases, see Grand Jury, Cent. Dig. §§ 8–13, 15; Dec. Dig. ⟹5.]

2. CRIMINAL LAW ⟹280—PLEA IN ABATEMENT—SUFFICIENCY.

A plea in abatement to an indictment *held* bad for uncertainty in the use of the words "within the year then next preceding"; it being material whether the calendar year or the 12 months next preceding was meant.

[Ed. Note.—For other cases, see Criminal Law, Cent. Dig. §§ 645–651; Dec. Dig. ⟹280.]

3. CRIMINAL LAW ⟹280—PLEAS IN ABATEMENT—MISCONDUCT OF ATTORNEYS BEFORE GRAND JURY.

A plea in abatement on the ground of misconduct of the government attorneys in the grand jury room must set out facts which raise a legal presumption of prejudice.

[Ed. Note.—For other cases, see Criminal Law, Cent. Dig. §§ 645–651; Dec. Dig. ⟹280.]

Criminal prosecution by the United States against Matthew T. Gradwell and others. On demurrers to pleas in abatement by defendant Earl Dodge. Demurrers sustained.

Harvey A. Baker, U. S. Atty., of Providence, R. I. (William H. Camfield, Asst. U. S. Atty., of Providence, R. I., on the brief), for the United States.

Barney & Lee, Walter H. Barney, Wilson, Gardner & Churchill, and Alexander Churchill, all of Providence, R. I., for defendants.

BROWN, District Judge. [1] The ninth and tenth pleas in abatement, though they allege that the grand juror was not qualified at the time he was impaneled and sworn, and at the time of the return of the indictment, contain no allegation that he was not liable to serve and duly qualified to serve at the time he was summoned for service in this court. If the qualification is to be determined as of the date when the juror was summoned, the plea is bad as not negativing his qualification at that time. For the purposes of the demurrer, and under the strict rules of law applicable to pleas in abatement, we are required to assume that the grand juror was duly qualified when summoned.

The question is then presented whether the facts alleged in the plea, in substance that he was not, when sworn and during his service as grand juror, qualified to vote upon any proposition to impose a tax or for the expenditure of money, are sufficient to work a disqualification; in other words, whether the subsequent loss of that right to vote which he possessed when summoned affects his right to act as a

grand juror, and vitiates all proceedings of the grand jury in whose proceedings he took part.

The proposition that the right and duty to serve as a grand juror are concurrent in time with the right to vote as a property voter, so that the qualifications of grand jurors properly selected may respectively expire from time to time during their service as a juror parts with his real estate, or upon the lapse of a year from the time of his payment of a tax on personalty, is so impractical, and would lead to such absurd and unforeseen results, that it must be rejected.

At the argument it was practically conceded that, if qualified to vote at the time when impaneled and sworn, a subsequent loss of qualification as a voter would not disqualify him from completing the duties of a grand juror.

A requirement that jurors shall be selected from the class of voters called property voters (see chapter 279, § 1, Gen. Laws R. I.) does not imply that the right of the courts to compel the performance of jury duty shall be hampered by the laws affecting the future voting rights of persons who were voters, and thus liable to serve, when summoned by the courts. There is nothing in the Rhode Island statutes that requires that a juror shall retain his voting qualifications throughout the time of service, or that limits his liability to service to the time during which he remains qualified to vote. On the contrary, an examination of chapter 279, Gen. Laws R. I., on jurors and juries, and especially of section 19 of said chapter, shows that persons whose names are drawn between the 15th day of June and the second Monday of July in any year shall be liable to serve as jurors at any time before the second Monday of July of the following year, a period which may exceed the year for which the payment of a tax may qualify one to vote. This illustrates that competency to serve is not regarded as necessarily concurrent with competency to vote. Nor is there in the nature of the thing any reason that requires us to consider whether a person duly selected by reason of property qualification for voting has retained that qualification during the period of service.

As a matter of policy it may be provided by statute that jurors shall be chosen from the class of persons who are property voters. This is presumably a rough way of getting superior jurors; but when a juror has been chosen from this class it would be unreasonable and impractical to say that public policy requires that by loss of his real property, or by his neglect to pay a tax, he shall at once be regarded as no longer suitable for service, and be relieved from or rejected from the future performance of a duty, or the completion of a duty, for which he was duly selected under the law. There is no more substantial reason to regard him as unqualified for service by such subsequent disqualification as a voter than exists in the case of a public officer whose eligibility to election depends upon his being a qualified elector, but who does not by losing his vote lose his office. See State v. Lake, 16 R. I. 511, 17 Atl. 552.

The property qualification as a voter implied in section 1, c. 279, Gen. Laws R. I., must be regarded as affecting a person's eligibility for selection as a juror, and not as prescribing a measure of his continuing capacity to serve. The juror having been duly drawn and summoned

for service in this court in conformity with the provisions of chapter 12 of the Judicial Code (Comp. St. 1913, §§ 1252–1265), and at that time having the qualifications prescribed by the state law then in force, should not be permitted to escape such service by any subsequent act whereby he might voluntarily disqualify himself as a voter in future state elections, as, for example, a conveyance of his real property (see In re Voting List, 19 R. I. 614, 35 Atl. 147), or a failure to pay a personal property tax (see In re Providence Voters, 13 R. I. 737). Nor is there any reason why involuntary disqualification for future voting, occurring after he was summoned for jury duty in this court, should require this court to discharge him, except the assumption that under the laws of Rhode Island the right to vote upon a property qualification is a measure of the continuing personal capacity of a person to perform jury service. If we should accept this assumption, it would logically follow that a person duly qualified when summoned might thereafter become incompetent for service in the period after he had been impaneled and sworn, as well as within the period between the date of summons and the date at which he attended court in obedience to the summons.

The concession of the defendant that disqualification for voting occurring after the impaneling of the juror would not affect his capacity to complete his service is practically an admission that property qualification for voting is not a measure of the capacity to perform jury service, but only a requisite for eligibility or for selection for such service.

But it is argued that the time for selection of the juror and for determining his then existing qualifications is the time when the grand jury is impaneled and sworn. State v. Davis, 12 R. I. 492, 34 Am. Rep. 704, does not support the defendant's contention. The plea in abatement in that case related to a grand juror who was taken up on venire; the court saying:

> "We think, too, the plea is sufficient in point of form, however it might have been if the juror had been drawn (see State v. Middleton, 5 Port. [Ala.] 484); for we know as a matter of practice, that a grand juror taken up on venire is immediately impaneled and sworn."

State v. Middleton, referred to, held that in the absence of a statute making it necessary that freeholders and householders shall continue such up to the time they are actually drawn to serve on the jury, if they possess this qualification when their names are returned by the sheriff, though they may afterwards part with it, they are competent jurors.

A plea in abatement setting up merely that one of the grand jurors was not, at the time the indictment was found, a freeholder, etc., was held bad on demurrer, for failure to allege that he was neither a freeholder nor householder when the list was returned to the clerk. See, also, Commonwealth v. Jordan, 207 Mass. 259, 93 N. E. 809. The opinion in State v. Davis, therefore, does not decide, but leaves open, the present question.

Upon a consideration of chapter 279, Gen. Laws R. I., I am of the opinion that the duty of jury service imposed by its provisions upon

a person designated in section 1 continues throughout the period prescribed by law, even if at any time during that period of required service he loses the right to vote. The duty being imposed upon him while one of the designated class of voters continues for the prescribed period of time. See chapter 279, §§ 19, 26. No limitation of such period by loss of the right to vote is found in the terms of the statute, and no sound reason exists for implying such limitation.

[2] But even were it true that under a proper construction of the statutes the property qualification to vote must exist at the time the grand juror is sworn and impaneled, there would still remain a question as to the sufficiency of the plea.

In attempting to negative the existence of qualification to vote through payment of a tax, the plea asserts the nonpayment of a tax "within the year then next preceding." Does this mean the calendar year next preceding, or the 12 months next preceding? From the opinion of the court in Re Providence Voters it clearly appears that this is a very indefinite expression. The Supreme Court said:

> "There is in fact, if we consider merely the letter of the Constitution, no decisive reason for preferring either construction to the other."

The construction of the constitutional expression by the municipal authorities of the city of Providence, and the construction by the state Legislature, were directly opposed. Though the advisory opinion of the justices adopts the legislative construction, this does not aid the defendant.

We have here not the question of the meaning of this phrase as used in the Constitution, as a matter to be determined in the light of a legislative construction, but the meaning of this language when used by a pleader in a plea in abatement under rules of law which require certainty. If taken to mean the calendar year next preceding, this does not with certainty set forth a disqualification to vote, since the tax may yet have been paid during the 12 months next preceding. As we have seen, the expression is as capable of one meaning as of the other.

It follows that the pleas are bad for uncertainty in this particular, irrespective of the question what day the plea refers to as the end of "the year next preceding." Capwell v. Sipe, 17 R. I. 475, 23 Atl. 14, 33 Am. St. Rep. 890; State v. Rife, 18 R. I. 596, 30 Atl. 467; O'Connell v. Queen, 11 C. & F. 155.

The argument that if the personal capacity or fitness of a juror to perform jury service—e. g., ability to hear, soundness of mind, lack of interest, or bias—must be found to exist at the time of actual service, political qualifications to vote must also exist at that time, is unsound, and involves, as we have said, the assumption that one duly selected from a class of persons as provided by law becomes personally incapable or unfit for jury service when he ceases to have the right to vote at certain future elections.

While it must appear at the time of service that one has the political qualification, this is shown by the fact that he was drawn and summoned at a time when the law imposed upon him as a then member of a certain class of voters the duty to serve as a juror throughout

a future period positively prescribed by law; in other words, it is only necessary at the time he is impaneled and sworn to inquire whether he is a person who is one of those previously designated by law for such future service as is to follow the impaneling of the jury.

The mental and physical capacity to perform the work of a grand juror is not affected by his subsequent loss of his vote.

That the Legislature of Rhode Island, because they thought it wise to choose jurors from the class of property voters, intended also to exclude immediately from the list of jurors so chosen any person who, during the short period for which the law holds him to service, should cease to be a voter, is a proposition that finds no support in the Rhode Island statutes, but, on the contrary, is inconsistent with the express provisions of those sections which prescribe the period of service. To carry along together, and thus mix and confuse statutes relating to two distinct matters, jury service and elections, is wholly impractical and unreasonable.

[3] The remaining pleas in abatement may be shortly disposed of. Each sets forth what is alleged to be misconduct of attorneys for the United States in the grand jury room.

Neither of these pleas sets up facts which raise a legal presumption that the grand jury was unduly influenced, or that it did not perform its full duty in pursuance of the instructions given by the court, or that the finding of the indictment resulted from improper influence. Even if the acts alleged may be regarded as improprieties, they are not of such a nature that actual prejudice must be presumed as matter of law.

The statement that acts were "to the manifest prejudice of the defendant" is insufficient to obviate the objection that it does not appear from the allegations of the pleas that the finding of the indictment was the result of improper influence. Agnew v. U. S., 165 U. S. 36, 45, 17 Sup. Ct. 235, 41 L. Ed. 624.

The pleas alleging misconduct are each and all insufficient to negative a legal finding of the indictment by the grand jury, uninfluenced by the alleged misconduct.

Demurrers sustained.

Ex parte WONG YEE TOON.

(District Court, D. Maryland. November 6, 1915.)

1. ALIENS ⟹23—CHINESE EXCLUSION ACT—ADMISSION AS MEMBER OF EXEMPT CLASS.

   A minor son of a Chinese person who is a member of one of the exempt classes, admitted as such into the United States, does not forfeit his right to remain by subsequently working as a laborer.

   [Ed. Note.—For other cases, see Aliens, Cent. Dig. §§ 76–90; Dec. Dig. ⟹23.]

2. ALIENS ⟹32—PROCEEDINGS FOR DEPORTATION OF CHINESE—SUFFICIENCY OF CHARGE.

   Technical objections to the form of the warrants in Chinese deportation cases are not sustainable, when it appears that the alien had notice of the

---

⟹For other cases see same topic & KEY-NUMBER in all Key-Numbered Digests & Indexes

actual charge against him in time to meet it and had a fair hearing thereon.

[Ed. Note.—For other cases, see Aliens, Cent. Dig. §§ 84, 92-95; Dec. Dig. ⚷32.]

3. ALIENS ⚷32—PROCEEDINGS FOR DEPORTATION OF CHINESE—FAIRNESS OF HEARING.

The fact alone that a Chinese alien before, at, or after his arrest was interrogated without counsel being present does not show that his hearing was not fair, although it is a circumstance which may be considered.

[Ed. Note.—For other cases, see Aliens, Cent. Dig. §§ 84, 92-95; Dec. Dig. ⚷32.]

4. ALIENS ⚷32—PROCEEDINGS FOR DEPORTATION OF CHINESE—EVIDENCE.

The fact that a Chinese alien was allowed to land is not the equivalent of a certificate of status or residence, and does not shift the burden of proof from him in subsequent proceedings for his deportation.

[Ed. Note.—For other cases, see Aliens, Cent. Dig. §§ 84, 92-95; Dec. Dig. ⚷32.]

5. ALIENS ⚷32—PROCEEDINGS FOR DEPORTATION OF CHINESE—SUFFICIENCY OF EVIDENCE.

In proceedings for deportation of a Chinese person before administrative officers, if the evidence is such as might lead a fair and reasonable man to think that the charge against the defendant was made out, their decision is not reviewable by the courts.

[Ed. Note.—For other cases, see Aliens, Cent. Dig. §§ 84, 92-95; Dec. Dig. ⚷32.]

Petition for habeas corpus by Wong Yee Toon. Writ denied.

Harold B. Scrimger and Irvin B. Scrimger, both of Baltimore, Md., for petitioner.

Samuel K. Dennis, U. S. Atty., and James A. Latane, Asst. U. S. Atty., both of Baltimore, Md., for respondent.

ROSE, District Judge. The petitioner is about to be deported under a warrant issued by the Secretary of Labor. He seeks his release by habeas corpus. He says he is about 19 years old. He looks younger. According to his story, he is the son of one Wong Que Teung, alias Wong Kus, a merchant long domiciled in Oakland, Cal. As such son the petitioner, on the 7th of November, 1913, was admitted by the immigrant officials at the port of San Francisco. A little over a year later he was found living with a Chinese laundryman in Baltimore. The immigration office secured some evidence which led it to think that he was employed as a laborer.

On the 22d of January, 1915, the Assistant Secretary of Labor issued a warrant for his arrest on various grounds, which may be summarized as that he was a Chinese laborer, without certificate of residence; that he procured his admission to this country by fraud, not being at the time of entry a minor son of a member of the exempt classes; and that at such time he was under 16, and was not accompanied by at least one of his parents. The petitioner was given a full and even elaborate hearing, at which he was represented by counsel. The entire record of the proceedings which led to his admission at San Francisco was put in evidence. The government called witnesses, and so did he, all of whom were examined and cross-examined. It ap-

peared that, on his arrival at San Francisco, the inspector who had immediate charge of the investigation reported that the petitioner was not the son of the Oakland merchant, but that on review by the superior officials he was admitted. On the question of his paternity there was in the deportation proceedings submitted very little evidence, which had not been considered before he was allowed to land.

All that was really new in the case made in Baltimore is that, very shortly after the boy arrived in California, the alleged father sent him clear across the continent to a laundryman here. The latter's relationship, if any, to either the father or the son, is, by petitioner's witnesses, variously and vaguely stated. The statements of the man in question are of such a character as to lead the immigrant officials to conclude that he is unworthy of belief. No letters have passed between the alleged father and the petitioner, and the former does not claim to have sent for the latter's support during an entire year more than $60. At the conclusion of the hearing, the local immigration authorities decided that he should be deported. He took an appeal to the Secretary of Labor, with whom his counsel filed elaborate briefs. On the 3d of July of this year the Secretary issued his warrant of deportation, in which the grounds specified were substantially the same as those in the warrant of arrest, except that the Secretary held that the weight of evidence showed that the petitioner, at the time of his admission, was over 16 years of age.

[1] At the hearing before me the government did not seriously contend that the order of deportation could be sustained on the ground that the petitioner was a Chinese laborer, not in possession of a certificate of residence. There is some evidence that he did some work in the laundry. It is for most purposes, at least, immaterial whether he did or did not. It is well settled that a minor son of a member of the exempt classes, admitted as such into the United States, does not forfeit his right to remain by subsequently doing a laborer's work. Ex parte Lew Lin Shew (D. C.) 217 Fed. 317; United States v. Louie Juen (D. C.) 128 Fed. 522; In re Yew Bing Hi (D. C.) 128 Fed. 319; United States v. Leo Won Tong (D. C.) 132 Fed. 190; United States v. Seid Bow (D. C.) 139 Fed. 56; In re Chin Ark Wing (D. C.) 115 Fed. 412; United States v. Lee Chee, 224 Fed. 447, — C. C. A. —; Lew Ling Chong v. United States, 222 Fed. 195, — C. C. A. —; United States v. Yee Quong Yuen, 191 Fed. 28, 111 C. C. A. 500; In re Tam Chung (D. C.) 223 Fed. 801; United States v. Foo Duck (D. C.) 163 Fed. 440; United States v. Foo Duck, 172 Fed. 856, 97 C. C. A. 204. It is true that the last above cited case intimated that, in determining whether a Chinaman who is admitted as an exempt ever was one, consideration may be given to the fact that very shortly after his admission he was found engaged in a nonexempt occupation.

[2] The government rests its right to deport the petitioner on the ground that he is not the son of the Oakland merchant. The petitioner says that neither the warrant of arrest nor that of deportation specified that charge with sufficient particularity. The petitioner and his counsel had seasonable notice that the government claimed that his paternity had been falsely stated. Technical objections to the form of the warrants in these cases are not sustainable, when it appears that the

alien had notice of the actual charge against him in time to meet it and had a fair hearing thereon. Nishimura Ekiu v. United States, 142 U. S. 651, 12 Sup. Ct. 336, 35 L. Ed. 1146; Chin Bak Kan v. United States, 186 U. S. 193, 22 Sup. Ct. 891, 46 L. Ed. 1121; United States v. Hom Lim, 223 Fed. 520, — C. C. A. —; United States ex rel. Bauder v. Uhl, 211 Fed. 628, 128 C. C. A. 560; United States ex rel. Rosen v. Williams, 200 Fed. 538, 118 C. C. A. 632; Toy Tong v. United States, 146 Fed. 343, 76 C. C. A. 621; In re NG Wah Chung, 220 Fed. 639, 136 C. C. A. 247; Ex parte Young (D. C.) 211 Fed. 370.

[3] The petitioner denies that he had such a hearing, because, and only because, when first arrested he was examined by the inspector before he had counsel, or any opportunity to procure counsel. Probably there are few or no formal tests by which to determine whether the immigration authorities have given an alien a fair hearing. The real question is: Have they honestly, and by means which would seem fair to a reasonable man, not trained in law, sought to arrive at the truth, in order that they may do justice? If their actions, taken as a whole, show that their inquiry was not a fair and honest effort to obtain such result, their action is not binding on the courts, whether from a technical standpoint their procedure was or was not open to criticism. The way in which, before the petitioner had an opportunity to obtain counsel, or before counsel was admitted, they conducted his examination, and that of other witnesses, may be, in connection with other facts, a weighty circumstance to show that they were not honestly seeking the truth. Ex parte Chin Loy You (D. C.) 223 Fed. 833; Ex parte Lam Pui (D. C.) 217 Fed. 456; Pang Sho Yin v. United States, 154 Fed. 660, 83 C. C. A. 484; Hanges v. Whitfield (D. C.) 209 Fed. 675; Whitfield v. Hanges, 222 Fed. 745, — C. C. A. —.

But the mere fact that the alien, before, at, or after his arrest, was interrogated without counsel being present, does not show that his hearing was not fair. On this point the decision of the Supreme Court in Low Wah Suey v. Backus, 225 U. S. 460, 32 Sup. Ct. 734, 56 L. Ed. 1165, is conclusive. To the same effect are In re Madeiros (D. C.) 225 Fed. 90; United States v. Moy Toom (D. C.) 224 Fed. 520; United States v. Lem You (D. C.) 224 Fed. 519; United States ex rel. Buccino v. Williams (C. C.) 190 Fed. 897; United States ex rel. Ivanow v. Greenawalt (D. C.) 213 Fed. 901; Sire v. Berkshire (D. C.) 185 Fed. 967; Siniscalchi v. Thomas, 195 Fed. 701, 115 C. C. A. 501; United States v. Hung Chang, 134 Fed. 19, 67 C. C. A. 93; Prentis v. Seu Leung, 203 Fed. 25, 121 C. C. A. 389.

[4] In this case the petitioner had a perfectly fair and even painstaking hearing. Upon the whole evidence a just man might come to the conclusion that the petitioner was not the son of the merchant whom he claimed as his father. I personally am very doubtful as to whether he is or is not. The Exclusion Acts do not seem just to a Chinaman, and it is not surprising that he feels himself at liberty to evade them by every means in his power. If moral sanctions do not stand in the way of his giving false testimony in order to escape from what seems to him their arbitrary injustice, he seldom has any reason to fear any legal penalties for false swearing. The govern-

ment cannot disprove his statement, or that of witnesses whom he may produce, as to the circumstances of his birth, a score or more years before. Whether the Chinese exclusion policy can or cannot be enforced, therefore, depends upon where the burden of proof is. In proceedings before a United States commissioner or judge to deport a Chinaman, the statute expressly declares that the burden of affirmatively proving his right to be in the United States is on him, and in like manner a Chinaman seeking to enter the United States as a member of the exempt class must satisfy the immigration authorities that he belongs to such class. If this boy had been refused permission to land at San Francisco, the courts could not have helped him. Does the fact that he was allowed to land now shift the burden of proof? If deportation proceedings had been instituted against him before a United States commissioner, and the decision had been in his favor, the judgment would, in the absence of at least a very clear showing of fraud or mistake, have been final and conclusive. United States v. Chin Len, 187 Fed. 544, 109 C. C. A. 310; United States v. Yeung Chu Keng (D. C.) 140 Fed. 748.

But the distinction between a judicial determination and the administrative acts of executive officials in admitting aliens to the country is wide and has often been drawn. Pearson v. Williams, 202 U. S. 281, 26 Sup. Ct. 608, 50 L. Ed. 1029; United States ex rel. Tremaine v. Commissioner of Immigration (D. C.) 209 Fed. 137; Ex parte Stancampiano (C. C.) 161 Fed. 164; Lew Quen Wo v. United States, 184 Fed. 685, 106 C. C. A. 639; Haw Moy v. North, 183 Fed. 89, 105 C. C. A. 381; Lim Jew v. United States, 196 Fed. 736, 116 C. C. A. 364; United States v. Chun Hoy, 111 Fed. 899, 50 C. C. A. 57. In Pearson v. Williams, supra, the same board of special inquiry which admitted the immigrant a month later ordered his deportation. Nor is such act of admission equivalent to a certificate of status or residence, issued in accordance with the provisions of some treaty or statute. Such a certificate imports at least prima facie verity. It cannot be treated as if it had never existed. Some evidence must be produced to justify the immigrant officials denying to it its usual and appropriate effect. Liu Hop Fong v. United States, 209 U. S. 453, 28 Sup. Ct. 576, 52 L. Ed. 888.

My attention has not been called to any cases in which such weight has been given to the mere admission of an alien into this country. In none of the cases above cited, in which the conclusiveness of such admission was denied, did the courts intimate that it was in itself an evidentiary fact sufficient to protect the alien against subsequent deportation, upon the same evidence which had once been held sufficient to require his admission. Some of the intimations to be found in them and some of their reasoning would seem to point to the opposite conclusion; but in no reported case, so far as I am aware, had the very question upon which this case must turn been directly presented and passed upon.

[5] The petitioner has entered this country, he has become subject in all respects to its jurisdiction, and is a part of its population. He cannot be deported, therefore, without hearing. Japanese Immi-

grant Case, 189 U. S. 86, 23 Sup. Ct. 611, 47 L. Ed. 721. One of the essentials of such a hearing is that there shall be some evidence to sustain the charge which is being heard, although in hearings before administrative officials they may doubtless accept testimony that would not be admissible in a court of law. Nishimura Ekiu v. United States, 142 U. S. 651, 12 Sup. Ct. 336, 35 L. Ed. 1146; Lee Lung v. Patterson, 186 U. S. 168, 22 Sup. Ct. 795, 46 L. Ed. 1108; Tang Tun v. Edsell, 223 U. S. 673, 32 Sup. Ct. 359, 56 L. Ed. 606; In re Jem Yuen (D. C.) 188 Fed. 350; Ex parte Watchorn (C. C.) 160 Fed. 1014; United States ex rel. Toy Gwok Chee v. Prentis, 202 Fed. 65, 120 C. C. A. 381; Healy v. Backus, 221 Fed. 358, — C. C. A. —. And if the evidence they actually hear is such as might lead a fair and reasonable man to think that the charge was made out, the decision of the administrative officials is in these cases final, and may not be reviewed by the courts.

The petitioner says, however, that the charge in this case is that he secured his admission by fraud, and that upon that issue the government must sustain the burden of proof. Be it so. Nevertheless, if the petitioner is not the son of the Oakland merchant, the charge is true. As already stated, there is, upon the whole evidence, abundant reason to doubt whether he is, and whether he is or is not is an issue to be passed upon by the immigrant officials, and not by the courts. The latter can interfere only when there is a total failure of all evidence upon which a fair-minded man would feel justified in acting. I certainly cannot find that there is any such lack here. If the question were one upon which it was my duty to pass, I am not prepared to say that I would not reach the same conclusion as that upon which the Secretary of Labor has acted.

It follows that the writ of habeas corpus must be dismissed, and the petitioner remanded to the custody of the immigration officials for deportation under the Secretary's warrant.

IRVINE v. CHURCH et al.

(District Court, E. D. New York. May 21, 1914.)

1. PARTNERSHIP ⟹197—ACTIONS—STATUTORY PROVISIONS.

Under Rev. St. Ohio, § 5011, providing that a partnership formed for the purpose of carrying on a trade or business in the state or holding property therein, may sue or be sued by the usual or ordinary name which it has assumed, if a partnership holds property in the state, it may be sued by the firm name, though not formed for the purpose of holding property in the state.

[Ed. Note.—For other cases, see Partnership, Cent. Dig. § 360; Dec. Dig. ⟹197.]

2. CORPORATIONS ⟹89—STOCK ASSESSMENTS—NOTICE.

Under the statutes of Ohio, notice to a nonresident partnership of an assessment on corporate stock owned by it was not invalidated by the previous death of one of the partners; the proceeding being in a sense one in rem.

[Ed. Note.—For other cases, see Corporations, Cent. Dig. §§ 367-379, 381, 382; Dec. Dig. ⟹89.]

---

3. LIMITATION OF ACTIONS ⟹180—ACTIONS—PLEADING—DEMURRER.
Rev. St. Ohio, § 3258a, providing that an action upon the liability of stockholders under the preceding section can only be brought within 18 months after the debt or obligation shall become enforceable against stockholders, is a statute of limitation, and not available on demurrer.
[Ed. Note.—For other cases, see Limitation of Actions, Cent. Dig. §§ 670–675, 681; Dec. Dig. ⟹180.]

At Law. Action by Ellsworth C. Irvine, as receiver of the Columbus, Sandusky & Hocking Railroad Company, against Charles T. Church and others, as executors of E. Dwight Church, deceased. On demurrer to the complaint. Demurrer overruled.

McLaughlin, Russell, Coe & Sprague, of New York City (Rufus W. Sprague, Jr., Francis S. Hutchins, and Edward D. Freeman, all of New York City, of counsel), for plaintiff.

Rounds, Schurman & Dwight, of New York City (Arthur C. Rounds and Richard E. Dwight, both of New York City, of counsel), for defendants.

VAN VECHTEN VEEDER, District Judge. The ten grounds of demurrer may be summarized as questioning the court's jurisdiction of the subject-matter, the plaintiff's legal capacity to sue, the validity of the laws of the state of Ohio upon which the complaint is based, and the sufficiency of the complaint with respect both to (a) the requirements of the Ohio statute as to service upon nonresident stockholders and (b) to the asserted termination of the cause of action by limitation before action brought. The court's jurisdiction, the plaintiff's capacity to sue, and the validity of the state statutes seem to me to be quite clear. Indeed, the stress of the defendants' argument is thrown upon the final point, relating to the asserted insufficiency of the complaint in the two particulars mentioned.

First, then, with respect to the defendants' contention that the requirements of the Ohio statute as to service upon nonresident stockholders were not complied with in the Ohio suit, either as to the defendants or their testator, and that the proceeding and the judgment rendered therein are not enforceable against the defendants. The defendants' argument may be summarized thus:

What the Ohio statute of 1900 required as a basis for the enforcement of the judgment against nonresident stockholders was a service upon such stockholders which would have been sufficient in an action to foreclose a mortgage to bring the nonresident into the action as a party defendant. The complaint in issue does not show such service. Indeed, the only permissible inference from the allegations of the complaint, in connection with the decrees of July, 1905, and December, 1906, is that whatever service was made was attempted to be made upon Church & Co., and not upon E. Dwight Church, defendants' testator, either individually or as surviving partner of Church & Co. This attempt to bring in Church & Co. as a firm was abortive. A nonresident firm, not shown to be doing business in Ohio, could not be sued or served in the firm name, and even if such a firm had been at the time

doing business in Ohio, it could not have been served by publication. For the provision of Rev. St. Ohio, § 5011, authorizing suits against partnerships in the firm name, is limited to partnerships formed for the purpose of carrying on a trade or business in the state, or for the purpose of holding property therein, and it is not alleged that Church & Co. was organized for any such purpose. So, also, Rev. St. Ohio, § 5039, provided that in suits against a firm in the firm name service of process upon the partnership should be made "by leaving a copy at its usual place of doing business, or with any member of such partnership," and it was held in Smith v. Hoover, 39 Ohio St. 249, that the prescribed mode of acquiring jurisdiction of a defendant was exclusive. Furthermore the firm of Church & Co. had been dissolved by the death of James A. Church in March, 1896, almost three years before the Marriott and Kinsey suits were begun, and there was therefore no longer a firm of Church & Co. which could sue or could be sued, and the surviving partner could not as such be sued in the name of Church & Co. or otherwise. Insurance Co. v. Carnahan, 63 Ohio St. 258, 58 N. E. 805. In short, the publication against Church & Co. was ineffective, because Church & Co. as a firm could not be sued or made a party defendant, and could not be served by publication, and for the further reason that the firm, within the meaning of the Ohio statute, had ceased to exist some six years before the attempt to serve by publication was made. The publication as against Church & Co. was ineffective as against the defendants' testator, the surviving partner in that firm, because he was not the party named in the process, and because he was not, within the meaning of the Ohio statute, the successor of the firm.

The plaintiff is not attempting to enforce a personal judgment obtained against Church & Co. or its partners in Ohio. He seeks to enforce an assessment upon the stockholders of the railroad company. If the service in question was necessary (see Blackburn v. Irvine, 205 Fed. 217, 123 C. C. A. 405), I am of opinion that the defendants' objections are not well taken. Section 3260c, Rev. St. Ohio, as amended in 1900, simply requires that notice be given to nonresident stockholders as provided in sections 5048–5052.

[1] The Ohio statute (section 5011), permitting a partnership to sue or be sued by its name, does not, as the defendants' counsel state, apply "only to firms organized for the purpose of carrying on business in Ohio, or *for the purpose* of holding property therein." The statute reads:

> "A partnership formed for the purpose of carrying on a trade or business in this state, or holding property therein," may sue and be sued by the firm name.

Church & Co. held property within the state, to wit, stock in the railroad company.

The case of Smith v. Hoover, 39 Ohio St. 249, involved a statute concerning constructive service in attachments issued by justices of the peace, and simply held that personal jurisdiction over a partnership was not acquired by constructive service by publication, when property of the defendant had been taken under an order of attachment.

[2] The defendants' criticism of the service on Church & Co., in view of the death of James A. Church, is answered by the decision of the Circuit Court of Appeals for this circuit in Spargo v. Converse, 191 Fed. 823, 112 C. C. A. 337. The proceeding is, in a sense, a proceeding in rem.

[3] In the next place, the defendants contend that the plaintiff's cause of action terminated by limitation 18 months after it became enforceable against the stockholders and before the present action was brought. This contention is based upon section 3258a of the Ohio Revised Statutes, enacted April 29, 1902, and re-enacted April 25, 1904:

"An action upon the liability of stockholders under the last preceding section can only be brought within eighteen months after the debt or obligation shall become enforceable against stockholders."

Assuming that this statute is applicable to the present action, I agree with Judge Hough (Irvine v. Simpson, memorandum decision, not for publication, November 10, 1913) that it is a statute of limitation, and therefore not available on demurrer.

The demurrer is overruled, and the defendants directed to answer within 20 days from the entry of order.

THE QUICKSTEP.

(District Court, D. Rhode Island. October 26, 1915.)

Nos. 1324–1326, 1328, 1330–1332, 1335.

PAYMENT ⟹39—APPLICATION OF PAYMENTS—RATIFICATION.

A debtor is bound by the application of a payment to unsecured instead of secured claims, although contrary to his directions when the payment was made, where on notice he assented to the application as made.

[Ed. Note.—For other cases, see Payment, Cent. Dig. §§ 104–114; Dec. Dig. ⟹39.]

In Admiralty. Suit by the Mechanics' Foundry & Machine Company against the fishing schooner Quickstep, heard with seven other cases. Decrees for libelant.

Frank Healy, of Providence, R. I., for libelant.

Gardner, Pirce & Thornley and William H. Thornley, all of Providence, R. I., for claimant.

BROWN, District Judge. These eight cases were tried together and present a single question of application of payments.

The Atlantic Oil & Phosphate Company was indebted to the libelant upon accounts for which the libelant had maritime liens, and also upon accounts for which there were no liens. On December 31, 1913, the Atlantic Company sent its check for $400.59 to cover a special invoice of May 24, 1913, for supplies for which there was a lien. By letter of January 2, 1914, receipt of the check was acknowledged, but the drawer was notified that the check could not be applied on the

bill for which it was sent, and that "we are applying it to the oldest charges upon the account," etc.

The check was retained, and was paid.

We need not consider the sufficiency of the reasons given for making such application, nor whether as matter of law the Atlantic Company had the right to insist that the payment be applied as directed, for there is, in a letter dated February 18, 1914, evidence that the Atlantic Company subsequently assented to such application, and oral evidence to the same effect.

The statement in said letter,

> "We are perfectly willing that for the unsettled balance due you may select such of the bills as would entitle your clients to maritime liens against our steamers, in order that your security for such unsettled balance may be as favorable to your clients as possible."

—and other expressions, indicate that after some controversy, and upon threats of litigation, the Atlantic Company acceded to the not unreasonable demand that, being in arrears on both classes of claims, its payments should first be applied to its unsecured debts.

I find that this agreement covered the entire matter, and was not intended to apply merely to a balance remaining after applying the check for $400.59 to the extinguishment of the amount of the invoice of May 24, 1913.

Even though the debtor had the right to direct the application of the payment in the first instance, and might have insisted that the retaining of the check discharged the claim for which it was sent, it did not so insist, but assented to the demand that the creditor should retain its maritime liens.

Upon the sixth paragraph of the answers I find against the claimant and in favor of the libelant in each case.

Draft decrees for the libelant may be presented accordingly.

COTTRELL et al. v. SPERRY & HUTCHINSON CO. et al.

(District Court, D. Oregon. October 4, 1915.)

No. 6773.

CONSTITUTIONAL LAW ⟹207—EQUAL PROTECTION OF LAWS—TRADING STAMP ACT.

Laws Or. 1915, c. 228, imposing an excise tax of 5 per cent. on the gross receipts of every person who shall use, or furnish to others for use, trading stamps, was evidently designed to be inhibitive of the use of such stamps, and is void, as in violation of the equality clause of the fourteenth amendment to the federal Constitution.

[Ed. Note.—For other cases, see Constitutional Law, Cent. Dig. §§ 625–648; Dec. Dig. ⟹207.]

In Equity. Suit by L. I. Cottrell, doing business as Cottrell's Montavilla Grocery, Woodward, Clarke & Co., a corporation, John H. Cowls, Edward McBurney, B. F. Cunningham, P. J. Peterson, and C. H. Reed,

copartners doing business as Peterson & Reed, and J. Woolach and M. J. Woolach, copartners doing business as Woolach & Son, against the Sperry & Hutchinson Company, a corporation, George M. Brown, Attorney General of the state of Oregon, and Walter H. Evans, District Attorney of Multnomah county, state of Oregon. Decree for plaintiffs.

Chriss A. Bell, of Portland, Or., for plaintiffs.

Hughes, McMicken, Dovell & Ramsey, of Seattle, Wash., and Frank T. Wolcott, of New York City, for defendant Sperry & Hutchinson Co.

George M. Brown, Atty., Gen., I. H. Van Winkle, of Salem, Or., Walter H. Evans, of Portland, Or., D. V. Halverstadt, of Seattle, Wash., and Frederick H. Whitfield, of Portland, Or., for defendants Brown and Evans.

Before GILBERT, Circuit Judge, and WOLVERTON and BEAN, District Judges.

PER CURIAM. This is a suit to enjoin the Sperry & Hutchinson Company from violating its contracts, whereby the company has agreed, under stipulated conditions and regulations, to furnish to the plaintiffs certain trading stamps, and to observe certain regulations relating to the use thereof, and also to enjoin the other defendants, who are state officers, from enforcing the provisions of chapter 228, General Laws of Oregon of 1915, known as the Trading Stamp Act. The act purports to levy an excise tax of 5 per cent. annually on the gross receipts of every person, firm, or corporation who shall use, or who shall furnish to any other person, firm, or corporation for use, in connection with the sale of any goods, wares, or merchandise in the state of Oregon, any stamps, coupons, or tickets commonly known as trading stamps.

It is at once apparent that the tax levied was intended and designed by the Legislature to be of such proportions as to be inhibitive of the use of such trading stamps within the state. In a case of like nature, arising under similar conditions in the state of Washington, the law was held by the District Court for the Eastern District of Washington, three judges sitting, to be void, as in contravention of the equality clause of the fourteenth amendment to the federal Constitution. Little v. Tanner, 208 Fed. 605. The doctrine of that case is altogether applicable to, and is decisive of, the issues here involved. Without, therefore, entering upon further discussion of the controversy, we hold the act in question to be without validity and void.

Let a decree be entered, enjoining the enforcement of the act, as prayed, with costs to the complainants.

LOUISVILLE & N. R. CO. et al. v. UNITED STATES et al.*

(District Court, M. D. Tennessee, Nashville Division. September 18, 1915.)

No. 30.

1. COMMERCE ⟹98—INTERSTATE COMMERCE COMMISSION—REVIEW OF PROCEEDINGS.

A conclusion of the Interstate Commerce Commission upon a question of fact, such as the reasonableness of a rate or the giving of a preference, whose correctness depends wholly upon a consideration of the weight to be given evidence before it, will not be reviewed by the court; but a conclusion which plainly involves, under the undisputed facts, an error of law, or which is shown to be supported by no substantial evidence, or to be contrary to the indisputable character of the evidence, thereby likewise involving an error of law, will be so reviewed.

[Ed. Note.—For other cases, see Commerce, Cent. Dig. § 148; Dec. Dig. ⟹98.]

2. CARRIERS ⟹32—REGULATION—STATUTORY PROVISIONS—"FACILITY FOR INTERCHANGE OF TRAFFIC."

An arrangement whereby the entire switching service of each of two railroad companies over tracks separately or jointly owned by them is performed jointly by both operating as joint principals through a terminals association maintained by them as their joint agent, each switching for both itself and the other railroad, the charge therefor based on actual cost being made against the road having the transportation haul is a reciprocal switching arrangement, and constitutes a facility for the interchange of traffic between the lines to two railroads within Interstate Commerce Act (Act Feb. 4, 1887, c. 104, 24 Stat. 380 [Comp. St. 1913, § 8565]) § 3, providing that every common carrier shall, according to respective powers, afford all reasonable, proper, and equal facilities for the interchange of traffic between their respective lines, and for the receiving, forwarding, and delivering of passengers and property to and from their several lines and those connecting therewith, and shall not discriminate in their rates between such connecting lines; and hence the railroads doing such switching must afford equal facilities to all other lines for like interchange of traffic without discrimination.

[Ed. Note.—For other cases, see Carriers, Cent. Dig. §§ 83–85; Dec. Dig. ⟹32.

For other definitions, see Words and Phrases, First and Second Series, Facilities.]

3. CARRIERS ⟹32—REGULATION—STATUTORY PROVISIONS—"UNJUST DISCRIMINATION."

Where the entire switching service of two railroad companies was performed jointly by both operating as joint principals through a terminals association as joint agent and the physical conditions surrounding the interchange of traffic between such roads were not substantially different from those surrounding the interchange of traffic between the lines and those of another road not a member of the Terminals Association, and the cost to the former being the same whether the traffic was competitive or not, the refusal of such roads to switch competitive traffic to and from the third road on the same terms as the noncompetitive traffic, while interchanging both kinds of traffic on the same terms with each other, constituted an "unjust discrimination" under Interstate Commerce Act, § 3, requiring every common carrier to afford all reasonable, proper, and equal facilities for the interchange of traffic to connecting lines without discrimination, regardless of the fact that joint terminals have been con-

⟹For other cases see same topic & KEY-NUMBER in all Key-Numbered Digests & Indexes

*For opinion on motion to modify decree, see 227 Fed. 273.

structed by the two members of the association at great expense and are maintained by them.

[Ed. Note.—For other cases, see Carriers, Cent. Dig. §§ 83-85; Dec. Dig. ⟹32.

For other definitions, see Words and Phrases, First and Second Series. Unjust.]

4. CARRIERS ⟹33—REGULATION—STATUTORY PROVISIONS—VALIDITY.

An order of the Interstate Commerce Commission, requiring that certain railroad companies which had entered into an agreement for a reciprocal switching should cease to maintain a practice whereby they refused to switch interstate competitive traffic to and from the tracks of another road on the same terms as interstate noncompetitive traffic, while interchanging both kinds of traffic on the same terms with each other, and that they should establish rates for such other road, which should not be different from those maintained with respect to similar shipments from their respective tracks, is not invalid as requiring the parties to the switching agreement to give the use of their tracks and terminal facilities to the third road within the proviso of Interstate Commerce Act, § 3, that common carriers shall not be required to give the use of their tracks or terminal facilities to another carrier engaged in like business.

[Ed. Note.—For other cases, see Carriers, Cent. Dig. §§ 86-90; Dec. Dig. ⟹33.]

5. CARRIERS ⟹33—REGULATION—RATES.

An order of the Interstate Commerce Commission, requiring certain railroads which had entered into a reciprocal switching agreement to allow another road to participate in its facilities upon equal terms, is not invalid as involving transportation rather than switching, and requiring the establishment of a joint rate and through route.

[Ed. Note.—For other cases, see Carriers, Cent. Dig. §§ 86-90; Dec. Dig. ⟹33.]

6. CONSTITUTIONAL LAW ⟹297—DUE PROCESS—REGULATION OF COMMERCE.

An order of the Interstate Commerce Commission, requiring railroads doing reciprocal switching under a joint agreement to allow a third railroad to participate in the facilities thereof on equal terms, is not invalid as taking property without due process of law.

[Ed. Note.—For other cases, see Constitutional Law, Cent. Dig. §§ 832-834; Dec. Dig. ⟹297.]

7. CARRIERS ⟹33—REGULATION—SWITCHING OPERATIONS.

An order of the Interstate Commerce Commission, requiring railroads which are parties to a reciprocal switching arrangement to allow another railroad to participate in the facilities thereof on equal terms, was not invalid because one of the parties to such arrangement had no track connection with the third road within the switching limits of the terminals maintained by the parties to the agreement, where it connected with such road within such switching limits over the lines of another party to the agreement.

[Ed. Note.—For other cases, see Carriers, Cent. Dig. §§ 86-90; Dec. Dig. ⟹33.]

8. CARRIERS ⟹33—REGULATION—SWITCHING AGREEMENTS.

An order of the Interstate Commerce Commission, requiring railroads doing their switching under a reciprocal agreement to allow a third road to participate in the facilities thereof, was not invalid as against the objection that it required the admission of such third into the switching agreement, or to do switching at less than the actual cost of service.

[Ed. Note.—For other cases, see Carriers, Cent. Dig. §§ 86-90; Dec. Dig. ⟹33.]

9. CARRIERS ⟹33—REGULATION—SWITCHING OPERATION.

An order of the Interstate Commerce Commission, requiring roads which were doing their switching under a reciprocal agreement to give equal facilities to a third road, was not objectionable as requiring the abrogation of the switching agreement.

[Ed. Note.—For other cases, see Carriers, Cent. Dig. §§ 86–90; Dec. Dig. ⟹33.]

10. COMMERCE ⟹91—INTERSTATE COMMERCE COMMISSION—REVIEW—"FINAL HEARING."

A hearing before three judges of a motion to dismiss for want of equity a petition to set aside an order of the Interstate Commerce Commission is a final hearing within the meaning of Act Oct. 22, 1913, c. 32, 38 Stat. 220 (Comp. St. 1913, § 998), relating to final hearings before three judges of any suit brought to sustain or set aside an order of the Interstate Commerce Commission.

[Ed. Note.—For other cases, see Commerce, Cent. Dig. §§ 338–355; Dec. Dig. ⟹91.

For other definitions, see Words and Phrases, First and Second Series, Final Hearing or Trial.]

11. INJUNCTION ⟹114—GROUNDS—INJURY.

An order made by the Interstate Commerce Commission in reference to switching operations against a holding company carrying on no railroad or switching operations whatever, and which cannot apply or affect such holding company in any way, involves merely abstract and theoretical injuries, without substantial prejudice, and will not be enjoined at its instance.

[Ed. Note.—For other cases, see Injunction, Cent. Dig. §§ 202–220; Dec. Dig. ⟹114.]

In Equity. Petition by the Louisville & Nashville Railroad Company and others against the United States and others, to set aside an order of the Interstate Commerce Commission. Motion denied, and petition dismissed.

Edward S. Jouett and William A. Colston, both of Louisville, Ky. (Henry L. Stone, of Louisville, Ky., on the brief), for Louisville & N. R. Co.

Claude Waller, of Nashville, Tenn. (R. Walton Moore and Frank W. Gwathmey, both of Washington, D. C., on the brief), for Nashville, C. & St. L. Ry.

Blackburn Esterline, Sp. Asst. Atty. Gen., of Chicago, Ill. (Lee Douglas, U. S. Atty., of Nashville, Tenn., on the brief), for the United States.

Edward W. Hines, of Washington, D. C. (Joseph W. Folk, of Washington, D. C., on the brief), for Interstate Commerce Commission.

Albert G. Ewing, Jr., F. M. Garard, and T. M. Henderson, all of Nashville, Tenn., for City of Nashville and Traffic Bureau of Nashville.

Before WARRINGTON, Circuit Judge, and McCALL and SANFORD, District Judges.

PER CURIAM. The Louisville & Nashville Railroad Company, the Nashville, Chattanooga & St. Louis Railway Company, and the Louisville & Nashville Terminal Company, hereinafter called the Louis-

ville & Nashville, the Nashville & Chattanooga, and the Terminal Company, respectively, having filed a petition against the United States, the Interstate Commerce Commission, and others, to set aside a certain order made by the Commission in the matter of the switching of competitive traffic at Nashville, Tenn., entered a motion for an interlocutory injunction restraining the enforcement of this order pendente lite. This motion was heard by three judges, as provided by the act of October 22, 1913 (38 Stat. 220, c. 32 [Comp. St. 1913, § 998]); the hearing being had upon the petition and exhibits, the answers of certain of the defendants, and affidavits filed by the petitioners on the question of irreparable injury. There were also heard motions of the United States and of the Commission to dismiss the petition, based, in substance, on want of equity upon its face.

The order sought to be enjoined was made by the Commission in proceedings instituted by the city of Nashville and its Traffic Bureau, wherein, among other things, they complained, in effect, that the rates and practices of the Louisville & Nashville and the Nashville & Chattanooga affecting the interchange and switching of competitive car traffic at Nashville, established by agreement and concert of action among the petitioners, subjected competitive car load traffic received and delivered at Nashville from and to the Tennessee Central Railroad Company, hereinafter called the Tennessee Central, to undue and unreasonable prejudice and disadvantage, in violation of section 3 of the Interstate Commerce Act, and prayed that they be required to desist from such violation, and for general relief. Answers having been filed and evidence taken, the Commission filed its written report, containing its findings of fact and conclusions thereon, which were, in substance, that the petitioners refuse to switch competitive traffic to and from the Tennessee Central at Nashville, upon the same terms as noncompetitive traffic, while interchanging both kinds of traffic on the same terms with each other, and that, since the interchange of traffic between the petitioners' lines and the Tennessee Central does not differ substantially from the conditions of interchange between the petitioners' own lines, this is unjustly discriminatory. City of Nashville v. Louisville & Nashville Railroad Co., 33 Inter. Com. Com'n, 76. And thereupon the Commission issued the order in question, requiring that the petitioners should cease on or before a specified date, and thereafter abstain, from maintaining a practice whereby they refuse to switch interstate competitive traffic to and from the tracks of the Tennessee Central at Nashville on the same terms as interstate noncompetitive traffic, while interchanging both kinds of traffic on the same terms with each other, and that they should, on or before such date, establish, publish, and thereafter maintain and apply to the switching of interstate traffic to and from the tracks of the Tennessee Central at Nashville rates and charges which should not be different from those which they contemporaneously maintain with respect to similar shipments from their respective tracks in such city.

The petitioners, having exhibited with their petition a transcript of all the evidence before the Commission, earnestly insist in support of their motion for an interlocutory injunction that the conclusions

of the Commission are not supported by any substantial evidence, and are contrary to the indisputable character of the evidence; that, as shown by the undisputed evidence, the Terminal Company does not handle any traffic or switch any freight at all; that, as shown by the indisputable character of the evidence, the Louisville & Nashville and the Nashville & Chattanooga do not interchange traffic with or switch traffic for each other, but each does its own switching, under a valid joint arrangement, which, in effect, merely gives them reciprocal trackage rights over each other's property and is not subject to regulation by the Commission under the Interstate Commerce Act; and, further, that this arrangement is maintained under circumstances and conditions wholly dissimilar to those involved in the switching of traffic to and from the Tennessee Central, and hence does not constitute discrimination. On the other hand, the defendants contend that it appears from the petition and the testimony before the Commission exhibited therewith that the conclusions of the Commission are supported by substantial evidence, and are not contrary to the indisputable character of the evidence; that they involve no error of law, and that hence they are not subject to review by the court in this proceeding, and the injunction should accordingly be denied and the petition dismissed for want of equity upon its face.

[1] It is well settled, on the one hand, that a conclusion of the Commission upon a question of fact, such as the reasonableness of a rate or the giving of a preference, whose correctness depends wholly upon a consideration of the weight to be given evidence before it, will not be reviewed by the court; and, on the other hand, that a conclusion which plainly involves, under the undisputed facts, an error of law, or which is shown to be supported by no substantial evidence or to be contrary to the indisputable character of the evidence, thereby likewise involving an error of law, will be so reviewed. Pennsylvania Co. v. United States, 236 U. S. 351, 361, 35 Sup. Ct. 370, 59 L. Ed. 616; Louisville Railroad v. United States (D. C.) 216 Fed. 672, 679 (three judges), and cases therein cited.

The material facts established by the undisputed evidence before the Commission and set forth, in the main, in its detailed findings, may be thus summarized:

Nashville is traversed and served by three railroads—the Louisville & Nashville, extending through from the north to the south; the Nashville & Chattanooga, from the west to the southeast; and the Tennessee Central, from the northwest to the east. The Louisville & Nashville and the Nashville & Chattanooga entered the city many years ago; the Tennessee Central in recent years. The Louisville & Nashville and the Nashville & Chattanooga are natural competitors for Nashville traffic, and each competes for such traffic with the Tennessee Central. All three railroads have extensive terminals in the city, with depots, yards, and tracks; their respective tracks reaching industries located mainly in different sections of the city, but partly in the same sections. The tracks of the Tennessee Central are connected with those of the Nashville & Chattanooga by an interchange track at Shops Junction, in the western section of the city, and with those of the

Louisville & Nashville by an interchange track at Vine Hill, just outside the city on the south. The tracks of the Louisville & Nashville and the Nashville & Chattanooga are connected at several points, but principally in the joint terminals operated by them in the center of the city, as hereinafter set forth. The entire situation is fully shown by a map accompanying the report of the Commission. 33 Inter. Com. Com'n, supra, opinion, page 78.

Originally the northern and southern lines of the Louisville & Nashville had separate terminals in different sections of the city, and the Nashville & Chattanooga a terminal midway between them; there being no track connections in the city between any of these different terminals. In 1872, by agreement between the companies, the Louisville & Nashville acquired, for the annual rental of $18,000 and other valuable considerations, perpetual trackage rights connecting its two terminals with each other and with the terminal of the Nashville & Chattanooga; this agreement also contemplating the construction of a union passenger station on the depot grounds of the Nashville & Chattanooga.

In 1880 the Louisville & Nashville began to acquire the capital stock of the Nashville & Chattanooga, and now owns slightly more than 71 per cent. thereof.

In 1893, to facilitate the construction of the proposed union station and other terminal facilities, the Louisville & Nashville and the Nashville & Chattanooga caused their competitor, the Terminal Company, to be organized, under the general incorporation laws of Tennessee. These laws give terminal companies the right to lease their property and terminal facilities to any railroad company utilizing them, upon such terms and time as may be agreed upon by the parties. The Louisville & Nashville owns all of the capital stock of the Terminal Company.

On April 27, 1896, the Louisville & Nashville and the Nashville & Chattanooga, by separate indentures, leased to the Terminal Company for 999 years all of the property and railroad appurtenances thereon which they severally owned or controlled within or in the immediate vicinity of the original depot grounds of the Nashville & Chattanooga. In each of these leases the amount of the stipulated rental was left blank; the Terminal Company, however, covenanting to keep the premises in repair and to pay all accruing taxes.

On June 15, 1896, the Terminal Company leased to the Louisville & Nashville and the Nashville & Chattanooga, jointly, for 999 years, all the premises acquired by it under the former leases from them, together with all other premises which it had subsequently acquired, or might thereafter acquire. Under this lease the Terminal Company covenanted to construct upon the leased premises all passenger and freight buildings, tracks, and other terminal facilities suitable and necessary for such railroads centering at Nashville as might contract with it therefor, and to pay all taxes and insurance upon the leased premises and the improvements to be constructed thereon; while the two railroad companies agreed to pay it annually, as rental for the leased premises and the improvements thereon, 4 per cent. upon the actual cost of the acquisition of the premises and the construction of the

improvements, in addition to the amount of the taxes and insurance, and further agreed to keep the leased properties in repair.

On June 21, 1898, the Terminal Company entered into a contract with the city of Nashville whereby it agreed to construct a union passenger station on the premises covered by the above-mentioned leases, with freight depots, tracks, switches, etc., and viaducts over its tracks and certain new streets and extensions of streets; the city agreeing to secure the condemnation of land, close certain streets, and erect approaches to certain of the viaducts. The Louisville & Nashville and the Nashville & Chattanooga, in consideration of the benefits to be received by them from the proposed improvements, guaranteed the performance of the obligations of the Terminal Company under the contract. This contract made no provisions for future railroads.

The improvements agreed upon, including the passenger station, depot, tracks, etc., were duly made, being completed in 1900. The tracks thus constructed by the Terminal Company are connected with those of the Louisville & Nashville and the Nashville & Chattanooga, but not with those of the Tennessee Central.

The contribution of the city to these improvements cost approximately $100,000, while the total cost to the Terminal Company was considerably in excess of $2,000,000. To enable the Terminal Company to acquire the additional properties which it had purchased in addition to those leased to it by the two railroads, and to construct these improvements, the Louisville & Nashville and the Nashville & Chattanooga from time to time advanced to it the necessary funds. To repay these advances the Terminal Company executed a mortgage securing an authorized issue of $3,000,000 of bonds. These bonds were guaranteed by the two railroads, under authority given by the Tennessee laws relating to terminal companies. Of these authorized bonds, $2,535,000 were actually issued, the proceeds of which were used to repay the advances made by the railroads.

During the construction of these terminal facilities the Louisville & Nashville and the Nashville & Chattanooga continued, as theretofore, to operate their respective terminals independently, under reciprocal switching arrangements, by which each switched cars for the other to and from their local destinations, at a uniform charge of $2 per car; this switching charge being absorbed on competitive traffic by the railroad having the transportation haul, while on noncompetitive traffic it was paid by the shipper or consignee.

On August 15, 1900, shortly after the completion of the terminal facilities by the Terminal Company, the Louisville & Nashville and the Nashville & Chattanooga, being then the only two railroads entering Nashville, as a matter, primarily at least, of economy in the operation of terminal facilities, entered into an agreement under which they have since maintained and operated joint terminal facilities at Nashville, the effect of which is the underlying matter of controversy in this case. The essential provisions of this agreement are as follows:

The two railroads created an unincorporated organization, styled in the agreement the "Nashville Terminals," and hereinafter called the Terminals, for the maintenance and operation of Terminals at Nash-

ville, embracing in such organization all the properties, buildings, tracks, and terminal facilities leased to them by the Terminal Company, together with certain other individually owned tracks, which they severally contributed and attached to said Terminals, consisting of 8.10 miles of main and 23.80 miles of side tracks contributed by the Louisville & Nashville, and 12.15 miles of main and 26.37 miles of side tracks contributed by the Nashville & Chattanooga. The agreement further provided: (a) That the entire properties thus included within the Terminals should be maintained and operated, as such, under the management of a board of control, consisting of a superintendent of the Terminals and the general managers of the two railroads, the operation of the Terminals to be under the immediate control of the superintendent, who should appoint, subject to the approval of the board, a station master, master of trains, and other designated officers, each of whom should have a staff of employés for the conduct of his department. (b) That the expenses of maintaining and operating the terminals should be apportioned between the two railroads as follows: Passenger service expenses (including all expenses of the union passenger station) in proportion to the number of passenger-train cars and locomotives handled by the Terminals for each; siding expenses (to be ascertained on the basis of the number of hours that yard engines were engaged in switching to and from house and private siding, and bulk or team tracks, as compared with the total number of hours that they were engaged in all classes of service) in proportion to "the total number of cars placed on and withdrawn from house and private sidings, bulk or team tracks (by the Terminals) for each" railroad; train-yard expenses, in proportion to the number of all cars and train locomotives received and forwarded by the Terminals for each; and general expenses, in proportion to the average percentages of the three other expense accounts; provided, that before such apportionment of expenses, there should be deducted from the aggregate expenses all moneys received by the Terminals for room rents, restaurant and news stand privileges, etc., and services rendered any other persons. (c) That the separate freight stations and appurtenant tracks of each railroad and the tracks allotted to each for receiving and delivering bulk freights should be maintained and operated by the Terminals for each of them direct, and the expenses thereof charged directly to each; a like provision being made in reference to the operation of the Terminal roundhouse for the Louisville & Nashville alone. (d) That each railroad should set apart and allot to the use of the Terminals switching engines adequate to the work of switching and pulling trains in and about the Terminals, corresponding in efficiency to the proportion of work performed for each, which should be maintained and kept in repair by the Terminals and for which it should pay the railroads 4 per cent. annually upon their valuation at the time of allotment. And (e) That the rights, privileges, and uses of all the property in the Terminals by the respective railroads should be "the same, equal and joint, and none other," except only as to the bulk tracks, etc., operated for each separately.

In operating under this agreement all the work of breaking up incoming freight trains of both railroads after they come into the central

yards of the Terminals, and of collecting and making up outgoing freight trains for both railroads before they leave such yards, is performed by the Terminals. Thus, when an incoming freight train comes in on the line of either railroad into the central yards, all cars destined for industries located within the Terminals, either on the tracks jointly leased to the Terminal Company or on the tracks of either railroad otherwise included within the Terminals, are switched by the Terminals to such local destination, without distinction as to the particular tracks on which such industries are located; and, conversely, freight cars loaded at industries located on any of such tracks for transportation out of Nashville on the line of either railroad are switched by the Terminals to the central yards and made up into the outgoing train. In other words, the entire switching service in reference to either the incoming or the outgoing freight trains of each railroad to and from the separate and joint tracks of both railroads is performed by the Terminals, acting as joint agent of the two railroads under the Terminals agreement. However, in accordance with this agreement, the only direct charge for such switching service is, in effect, made against the railroad having the transportation haul, in accordance with the provision that the siding expenses shall be apportioned between the two railroads in proportion to "the total number of cars placed on and withdrawn from house and private sidings, bulk and train tracks, for each of the parties." Obviously, however, this apportionment of siding expenses does not represent the entire actual cost incident to the switching services, as it does not include any part of the general expenses and fixed charges of the Terminals, which are apportioned between the two railroads upon a different basis, as provided by the agreement.

The interchange track between the Nashville & Chattanooga and the Tennessee Central at Shops Junction is within the switching limits of the Terminals under this agreement, but the interchange track between the Louisville & Nashville and the Tennessee Central at Vine Hill is outside of these switching limits.

On December 3, 1902, the Terminal Company, the Louisville & Nashville, and the Nashville & Chattanooga entered into an agreement, reciting that the two leases of April 27, 1896, from the railroads to the Terminal Company had been canceled and abrogated; modifying the lease of June 25, 1896, from the Terminal Company to the railroads, so that thereafter it should only include certain tracks and parcels of land that had been directly acquired by the Terminal Company, and should be otherwise rescinded and abrogated and the properties of the railroads otherwise respectively restored as they were prior to the lease, subject only to the mortgage that had been executed thereon by the Terminal Company to secure its issue of bonds; reducing the term of the lease to 99 years; and modifying, in certain respects, the provisions of the lease as to the rental to be paid.

The terminal tariffs of both railroads publish service by the Terminals, and provide that "there is no switching charge to or from locations on tracks of the Nashville Terminals, within the switching

limits, on freight traffic, car loads, from or destined to Nashville" over either railroad, "regardless of whether such traffic is from or destined to competitive or noncompetitive points."

The Tennessee Central entered Nashville in 1901–1902, after strong opposition from the Louisville & Nashville, and leased its terminal facilities, consisting of a passenger station, freight depots, tracks, etc., from another Tennessee railroad terminal corporation that had been organized in 1893.

Prior to 1907 neither the Louisville & Nashville nor the Nashville & Chattanooga would interchange traffic with the Tennessee Central at Nashville, or any other point of connection. In that year, however, they both began to interchange with the Tennessee Central at Nashville all noncompetitive traffic, exclusive of coal traffic, at the rate of $3 per car; noncompetitive Nashville traffic being defined as traffic between Nashville and points reached only by one railroad into Nashville, or points served by two or more railroads into Nashville, for which, however, one railroad can maintain rates which the others cannot meet. This interchange of noncompetitive traffic between both the Louisville & Nashville and the Nashville & Chattanooga was and is effected by the connection between the Tennessee Central and the Nashville & Chattanooga at Shops Junction; there being no direct connection between the Tennessee Central and the Louisville & Nashville.

On December 9, 1913, upon complaint by the city of Nashville and others, the Commission found that the Louisville & Nashville and the Nashville & Chattanooga switched all traffic for each other at Nashville, but refused to switch coal to and from the Tennessee Central except at a prohibitive rate, thereby unjustly discriminating against coal to and from the Tennessee Central in favor of coal to and from each other's lines, and entered an order requiring the Louisville & Nashville and the Nashville & Chattanooga to abstain from maintaining any different practice with respect to switching interstate car load shipments of coal from and to the Tennessee Central at Nashville from that maintained with respect to similar shipments from and to their respective tracks. The Louisville & Nashville and the Nashville & Chattanooga thereupon filed a petition in this court, seeking to restrain the execution of this order, and applied for an interlocutory injunction, which was denied by this court. Louisville Railroad v. United States (D. C.) 216 Fed. 672 (three judges). This decision was recently affirmed, on appeal, by the Supreme Court. Louisville Railroad v. United States, 238 U. S. 1, 35 Sup. Ct. 696, 59 L. Ed. 1177. This order, however, was interpreted by both railroads as relating exclusively to noncompetitive coal, and while they have since that time switched noncompetitive coal to and from the Tennessee Central at $3 per car, the same as other noncompetitive traffic, they have not changed their former practice relative to competitive coal.

A table introduced in evidence by the petitioners (33 Inter. Com. Com'n, at page 83), shows the average cost to the Terminals of handling city freight traffic to be, exclusive of fixed charges, $4.128 per car. The Commission was of opinion that, while these figures

might not be absolutely correct, they were not shown to be substantially incorrect, and that the charge of $3 per car for switching Tennessee Central noncompetitive traffic was not shown to be unreasonably high, a conclusion in which we entirely concur.

The Louisville & Nashville will switch competitive coal and other competitive traffic at Nashville to and from the Tennessee Central, but only at its local rates, such interchange being usually effected through the agency of the Terminals, at Shops Junction, over the rails of the Nashville & Chattanooga. For a while the Nashville & Chattanooga would, in like manner, perform the same switching service to and from the Tennessee Central at its local rates; its published terminal tariff of December 14, 1913, expressly providing that such local rates would apply on competitive traffic from and destined to the Tennessee Central. Since January 25, 1914, however, shortly after the complaint in this case was filed, its terminal tariff has provided that competitive traffic will not be switched to and from the Tennessee Central, and no local rate applicable thereto has been published. The terminal tariff of the Tennessee Central provides that Louisville & Nashville and Nashville & Chattanooga competitive traffic will be switched at its local rates. The local rates applied to such switching by the Louisville & Nashville total from $12 to $36 per car, by the Nashville & Chattanooga, from $7 to $36 per car, and by the Tennessee Central from $5 to $36 per car. These rates are virtually prohibitive. The Tennessee Central favors their reduction, but will not reduce its rates until the other railroads do likewise.

The cost to the Terminals of switching competitive Tennessee Central traffic is the same as the cost of switching noncompetitive. The Louisville & Nashville interswitches competitive and noncompetitive traffic on the same terms with other carriers at Memphis, Tenn., Birmingham, Ala., and several other points. The Nashville & Chattanooga interswitches both kinds of traffic with all other carriers at all connection points at the same rates, except with the Tennessee Central at Nashville, having had in effect at Lebanon, Tenn., where it also connects with the Tennessee Central, a switching charge of $2 per car for both kinds of traffic since November 14, 1914.

The physical conditions surrounding the interchange of traffic between the lines of the Louisville & Nashville and the Nashville & Chattanooga, on the one hand, and the Tennessee Central, on the other, in reference to the number and location of industries, the switching movements involved, and the like, are set forth in detail in the report of the Commission (33 Inter. Com. Com'n, at page 86). Without restating them here, it is sufficient to say that we entirely concur in the finding of the Commission that the physical conditions of interchange of traffic between the lines of the Louisville & Nashville and the Nashville & Chattanooga and the Tennessee Central are not shown to differ substantially from the conditions of interchange between the lines of the Louisville & Nashville and the Nashville & Chattanooga, and that, moreover, none of the conditions relating to the switching Tennessee Central traffic appear to differ materially from the conditions of interchange between the lines of the Louisville & Nashville and the Nashville & Chattanooga prior to the establishment of the Terminals.

Upon the foregoing facts, we have, after careful consideration, reached the following conclusions:

[2] The operation jointly carried on by the Louisville & Nashville and the Nashville & Chattanooga under the Terminals agreement is not a mere exchange of trackage rights to and from industries on their respective lines at Nashville, under which each does all of its own switching at Nashville and neither switches for the other. It is, on the contrary, in substance and effect, an arrangement under which the entire switching service for each railroad over the joint and separately owned tracks is performed jointly by both, operating as principals through the Terminals as their joint agent, each railroad, as one of such joint principals, hence performing through such agency switching service for both itself and the other railroad. And the fact that the charge for such joint switching service is made on an approximately proportionate basis of actual cost, exclusive of fixed charges, against the railroad having the transportation haul, does not, in our opinion, change the underlying and dominant fact that the switching service itself is performed by both railroads jointly, that is, by each railroad operating as a joint principal through the means of the joint agency; the apportionment of the expenses relating only to the payment for the service and not to the joint performance of the service itself. And, viewed in its fundamental aspect, and considered with reference to its ultimate effect, we entirely concur in the conclusion of the Commission that such joint switching operation "is essentially the same as a reciprocal switching arrangement," constituting a facility for the interchange of traffic between the lines of the two railroads, within the meaning of the second paragraph of section 3 of the Interstate Commerce Act. That each railroad does not separately switch for the other, but that such switching operations are carried on jointly, is not, in our opinion, material. If it were, all reciprocal switching operations carried on by two railroads at any connecting point of several carriers could be easily put beyond the reach of the act, and its remedial purpose defeated, by the simple device of employing a joint agency to do such reciprocal switching. The controlling test of the statute, however, lies in the nature of the work done, rather than in the particular device employed or the names applied to those engaged in it. See, by analogy, United States v. Chicago Railroad, 237 U. S. 410, 413, 35 Sup. Ct. 634, 59 L. Ed. 1023.

Being, in effect, a reciprocal switching operation carried on by the Louisville & Nashville and the Nashville & Chattanooga, constituting a facility for the interchange of traffic between these two railroads, it necessarily follows, under section 3 of the Interstate Commerce Act, that equal facilities must be afforded all other lines for like interchange of traffic, without discrimination, and that, under section 15 of the act, the Commission is authorized to require the railroads performing such reciprocal service to desist from any discriminatory service in respect to such switching operations. Pennsylvania Co. v. United States, 236 U. S. 351, 35 Sup. Ct. 370, 59 L. Ed. 616; Louisville Railroad v. United States, supra, 238 U. S. 20, 35 Sup. Ct. 696, 59 L. Ed. 1177; Louisville Railroad v. United States (D. C.) supra, 216 Fed. 683.

[3] And in view of the fact that the physical conditions surrounding the interchange of traffic between the lines of the Louisville & Nashville and the Nashville & Chattanooga, on the one hand, and the Tennessee Central, on the other are not substantially different from those surrounding the interchange of traffic between the lines of the Louisville & Nashville and the Nashville & Chattanooga, and that the cost to the Louisville & Nashville and the Nashville & Chattanooga of switching competitive Tennessee Central traffic is the same as that of switching its noncompetitive traffic, we entirely concur in the conclusion of the Commission that the refusal of the Louisville & Nashville and the Nashville & Chattanooga to switch competitive traffic to and from the Tennessee Central on the same terms as noncompetitive traffic, while interchanging both kinds of traffic on the same terms with each other, is unjustly discriminatory. Such discrimination is not, in our opinion, obviated by the fact that the joint switching operation of the Louisville & Nashville and the Nashville & Chattanooga involves the use of the joint Terminals which they have constructed at great expense, or the fact that, under the Terminals agreement, they contribute to the expense of maintaining the Terminals and carry on their switching operations in the manner hereinbefore set forth. In Louisville Railroad v. United States (U. S.) supra, in which many of the facts hereinbefore set forth appeared in the report of the Commission, which had found, as a fact, that the Louisville & Nashville and the Nashville & Chattanooga switched for each other, the Supreme Court, affirming the decree of this court, said:

"Disregarding the complication arising out of joint ownership and the fact that each of the appellants switches for the other, it will be seen that the commission is not dealing with an original proposition, but with a condition brought about by the appellants themselves. Under the provisions of the Commerce Act (24 Stat. 380) the reciprocal arrangement between the two appellants would not give them a right to discriminate against any person or 'particular description of traffic.' For section 3 requires Railroad Companies to furnish equal facilities for the interchange of traffic between their respective lines, * * * 'provided that this should not be construed as requiring any such common carrier to give the use of its tracks or terminal facilities to another carrier engaged in like business.' If the carrier, however, does not rest behind that statutory shield, but chooses voluntarily to throw the Terminals open to many branches of traffic, it to that extent makes the yard public. Having made the yard a facility for many purposes and to many patrons, such railroad facility is within the provisions of section 3 of the statute, which prohibits the facility from being used in such manner as to discriminate against patrons and commodities. The carriers cannot say that the yard is a facility open for the switching of cotton and wheat and lumber, but cannot be used as a facility for the switching of coal. Whatever may have been the rights of the carriers in the first instance; whatever may be the case if the yard was put back under the protection of the proviso to § 3—the appellants cannot open the yard for most switching purposes and then debar a particular shipper from a privilege granted the great mass of the public. In substance that would be to discriminate, not only against the tendering railroad, but also against the commodity which is excluded from a service performed for others. * * * In this case the controlling feature of the Commission's order is the prohibition against discrimination. It was based upon the fact that the appellants were, at the present time, furnishing switching service to each other on all business, and to the Tennessee Central on all except coal and competitive business. As long as the yard remained open and was used as a facility for switching purposes the Commission had

the power to pass an order, not only prohibiting discrimination, but requiring the appellants to furnish equal facilities 'to all persons and corporations without undue preference to any particular class of persons.'"

And such discrimination being shown, we think it clear that, under the provisions of the Interstate Commerce Act and the authorities above cited, the Commission is authorized to require the Louisville & Nashville and the Nashville & Chattanooga to desist from such discrimination, and to establish and maintain a practice in regard thereto which shall be nondiscriminatory.

[4-6] The order made by the Commission requires the Louisville & Nashville and the Nashville & Chattanooga to desist from maintaining a practice whereby they refuse to interchange interstate competitive traffic to and from the tracks of the Tennessee Central at Nashville on the same terms as interstate noncompetitive traffic, while interchanging both kinds of said traffic with each other on the same terms; and to establish, publish, maintain, and apply to the switching of interstate traffic to and from the Tennessee Central tracks rates and charges which shall not be different from those which they contemporaneously maintain with respect to similar shipments from their respective tracks in said city. We find in the record substantial evidence sustaining the conclusions of the Commission on which this order is based, and are of the opinion that, on the facts established by the evidence, this order involved no error of law, and is clearly within the power of the Commission. It is, in our opinion, not invalid as requiring the Louisville & Nashville and the Nashville & Chattanooga to give the use of their tracks and terminal facilities to the Tennessee Central, within the meaning of the proviso contained in section 3 of the Interstate Commerce Act, or as involving transportation rather than switching, and requiring the establishment of a joint rate and through route, or as violating the constitutional provision against taking property without due process of law. Louisville Railroad v. United States, supra, 238 U. S. 18, 20, 35 Sup. Ct. 696, 59 L. Ed. 1177; Louisville Railroad v. United States (D. C.) supra, 216 Fed. 684. Nor is it affected by the fact that the Louisville & Nashville owns the majority of the stock of the Nashville & Chattanooga.

[7] Neither is the order invalid as to the Louisville & Nashville by reason of the fact that it has no track connection with the Tennessee Central within the switching limits of the Terminals, since it, as a party to the Terminals agreement, is carrying on switching operations for itself and for the Nashville & Chattanooga over the tracks of the Nashville & Chattanooga, which connect with the tracks of the Tennessee Central by an interchange track within such switching limits.

[8] Neither does the order of the Commission, in our opinion, require the Louisville & Nashville and the Nashville & Chattanooga to either admit the Tennessee Central into the Terminals agreement, as a constitutent member thereof, or to switch its competitive traffic at $3 per car, or at any other rate which may be less than the actual cost of service, exclusive of fixed charges. All that the order requires is that so long as they interchange competitive and noncompetitive traffic between their own lines on the same terms, they shall desist from making a distinction between competitive and noncompetitive Tennessee

Central traffic, and that they shall establish and maintain rates for switching interstate Tennessee Central traffic which shall not be different from those which they contemporaneously maintain with respect to switching similar traffic for each other; in other words, that they shall cease discrimination in interswitching their respective interstate competitive and noncompetitive traffic and that of the Tennessee Central.

[9] There is nothing in the order which requires the Louisville & Nashville and the Nashville & Chattanooga to abrogate their Terminals agreement; they are merely required, if they see fit to maintain it, to make no distinction, in operating under it, between competitive and noncompetitive Tennessee Central traffic, so long as they make no such distinction in their own traffic, and, whether they carry on their future switching operations separately or jointly, to publish and maintain rates applicable to the switching of interstate Tennessee Central traffic, both competitive and noncompetitive, which shall be the same as those for switching their own interstate traffic. If either the charges which they now make for switching noncompetitive Tennessee Central traffic, or those which, through the Terminals, they now make each other, are unreasonably low, as involving no element of fixed charges, or otherwise, this can be obviously remedied, consistently with the order of the Commission, by publishing and maintaining just and reasonable charges for switching their own interstate competitive and noncompetitive traffic, respectively, which shall likewise apply to the switching of similar Tennessee Central interstate traffic; although, of course, to the extent and in the proportion that they are proprietors of and share in the revenues of the Terminals, they will receive indirectly reimbursement for the switching charges made in reference to their own traffic.

[10] We therefore conclude that the application of the Louisville & Nashville and the Nashville & Chattanooga for a temporary injunction should be denied. And since there is exhibited with and as a part of the petition all the evidence taken before the Commission, we are constrained to conclude that the petition shows on its face no equity or ground for permanently enjoining the enforcement of the order of the Commission, which is the ultimate relief sought. We are hence of the opinion that the motions of the United States and of the Commission to dismiss the petition should, as to the petitioning railroads, be sustained; this being a matter within the authority of the three judges now composing the court, under the provision of the act of 1913, supra, relating to the final hearing before three judges of any suit brought to suspend or set aside an order of the Commission; the hearing of a motion to dismiss a petition for want of equity being, in our opinion, a final hearing within the meaning of such provision.

[11] And while the Terminal Company is shown by the proof to be solely a holding company carrying on no railroad or switching operations whatever, the order rendered against it by the Commission having been apparently inadvertently made and probably intended against the Terminals, the unincorporated association through which the two railroads carry on their switching operations, yet no material

injury to it is shown from the order, which apparently cannot apply to or affect it in any way. Hence no ground for the issuance of an injunction appears at its instance, either interlocutory or permanent; a court of equity not enjoining merely abstract and theoretical injuries which involve no substantial prejudice. People v. Canal Board, 55 N. Y. 390; Drummond Tobacco Co. v. Randle, 114 Ill. 412, 2 N. E. 536; Willcox v. Trenton Potteries, 64 N. J. Eq. 173, 53 Atl. 474; Atkins v. Chilson, 7 Metc. (Mass.) 398.

A decree will accordingly be entered denying the motion of the petitioners for an interlocutory injunction, sustaining the motions of the United States and of the Commission, and dismissing the petition, with costs.

LOUISVILLE & N. R. CO. et al. v. UNITED STATES et al.

(District Court, M. D. Tennessee, Nashville Division. October 23, 1915.)

1. APPEAL AND ERROR ⚷477—STAY OF PROCEEDINGS—AUTHORITY OF COURT.
A court of equity has inherent authority in the exercise of a sound discretion to accompany a decree changing the status quo, with an appropriate provision preserving the status quo pending an appeal.

[Ed. Note.—For other cases, see Appeal and Error, Cent. Dig. §§ 2247-2249; Dec. Dig. ⚷477.]

2. APPEAL AND ERROR ⚷477—STAY OF PROCEEDINGS—AUTHORITY OF COURT.
The inherent power of a court of equity to maintain the status quo pending an appeal from a decree changing the status quo is not impaired or lessened by any provision of Interstate Commerce Act Feb. 4, 1887, c. 104, 24 Stat. 379, the act creating the Commerce Court (Judicial Code [Act March 3, 1911, c. 231] § 200, 36 Stat. 1087) or Act Oct. 22, 1913, c. 32, 38 Stat. 219, abolishing the Commerce Court and transferring its jurisdiction to the District Courts.

[Ed. Note.—For other cases, see Appeal and Error, Cent. Dig. §§ 2247-2249; Dec. Dig. ⚷477.]

3. COMMERCE ⚷98—INTERSTATE COMMERCE COMMISSION—SETTING ASIDE ORDERS—STAY PENDING APPEAL.
Where it appeared, on a motion to modify a decree denying an interlocutory injunction and dismissing the petition, in a suit to set aside an order of the Interstate Commerce Commission relative to the interchange of traffic between the petitioners and a certain other railroad, that if the decree should be reversed by the Supreme Court a great and irreparable injury would in the meantime result to the petitioners, by reason of a diversion of part of their traffic by competing railroads, enabled to obtain access to local industries on their lines through the enforcement of such order, and the expense and disturbance of their business caused by changing their former practices and the publication of new tariffs, while it did not clearly appear that any particular individuals would suffer material financial injury if the order of the Commission was stayed for a short time, the enforcement of the order would be stayed, to enable the petitioners to perfect their appeal, and present to the Supreme Court an application for a preliminary suspension order pending the hearing of the appeal.

[Ed. Note.—For other cases, see Commerce, Cent. Dig. § 148; Dec. Dig. ⚷98.]

On motion to modify decree. Motion granted, and decree modified

For former opinion, see 227 Fed. 258.

⚷For other cases see same topic & KEY-NUMBER in all Key-Numbered Digests & Indexes

Henry L. Stone and William A. Colston, both of Louisville, Ky., R. Walton Moore and Frank W. Gwathmey, both of Washington, D. C., and Edward S. Jouett, of Louisville, Ky., for Louisville & N. R. Co. and Terminal Co.

Claude Waller, of Nashville, Tenn., for Nashville, C. & St. L. R. Co.

Blackburn Esterline, of Washington, D. C., for Attorney General.

Lee Douglas, of Nashville, Tenn., for United States District Attorney.

Edward W. Hines, of Washington, D. C., for Interstate Commerce Commission.

Albert Ewing, Jr., of Nashville, Tenn., for city of Nashville.

T. M. Henderson, of Nashville, Tenn., for Traffic Bureau of Nashville.

S. W. Fordyce, of St. Louis, Mo., and Walter Stokes, of Nashville, Tenn., for Tennessee Cent. R. Co.

Before WARRINGTON, Circuit Judge, and McCALL and SANFORD, District Judges.

PER CURIAM. In the opinion heretofore handed down in this cause, it was directed that a decree be entered denying the motion of the petitioners for an interlocutory injunction and dismissing the petition. Before the entry of such decree the petitioners moved the court to modify the proposed order by granting them an interlocutory injunction pending an appeal to the Supreme Court, or otherwise by proper order maintaining the status quo until such appeal should be decided, upon such terms as to execution of bond and prosecution of the appeal as the court might deem proper. This motion has been heard by the court after due notice.

[1] The inherent authority of a court of equity, in the exercise of a sound discretion, to accompany a decree changing the status quo, with an appropriate provision nevertheless preserving the status quo pending an appeal, is clear. Hovey v. McDonald, 109 U. S. 150, 151, 162, 3 Sup. Ct. 136, 27 L. Ed. 888. This case was followed by Thayer, Circuit Judge, in Cotting v. Stockyards Co. (C. C.) 82 Fed. 850, 857, in which, in a suit to enjoin the enforcement of a state statute, the court, in its final decree, although denying an injunction and dismissing the bill, neverthless, upon its own initiative, in view of the probability of an appeal, the importance of the questions involved, the doubt with which they were balanced, and the great harm which would result to the plaintiffs in the enforcement of the statute pending the appeal in the event the decree should be reversed, at the same time restored a restraining order that had been vacated by a former decree in the cause and continued the same in force pending the taking and determination of an appeal to the Supreme Court, upon conditions set forth in the opinion. This action of the Circuit Court was set forth in extenso in the statement of the case made by Mr. Justice Brewer in delivering the opinion of the Supreme Court on appeal, with, it seems, implied approval, and in the opinion itself it was stated that the Circuit Judge, although denying the relief sought by the plaintiffs, had "exercised his power of continuing the restraining order until such time as these questions could be determined," thus inferentially, at

least, if not expressly, recognizing the continuance of the restraining order as a proper exercise of "the power" of the Circuit Court under such circumstances. Cotting v. Stockyards Co., 183 U. S. 79, 80, 83, 22 Sup. Ct. 30, 46 L. Ed. 92. This principle was furthermore recognized in Louisville Railroad v. Siler (C. C.) 186 Fed. 176, 203, decided by three judges, two of whom are sitting in the present case, and in which, while denying the complainant's motion for an interlocutory injunction, the court, upon its own initiative, in view of the probability of an appeal, continued a previous restraining order until an opportunity had been given to the plaintiff to secure a review upon appeal, upon terms prescribed in the order. And see, by analogy, Interstate Commission v. Louisville Railroad (C. C.) 101 Fed. 146, 148, in which the court, after entering a decree granting an injunction restraining the plaintiffs from disobeying an order of the Interstate Commerce Commission, subsequently, at the same term, upon the application of the defendants, suspended the execution of such decree pending an appeal by the plaintiffs, upon conditions set forth in the opinion, and superseded the injunction pending such appeal.

[2] The majority of the court are of opinion that this inherent power of a court of equity to maintain the status quo pending an appeal is not impaired or lessened by any of the several provisions of the Interstate Commerce Act, the act creating the Commerce Court (subsequently embodied in section 200 et seq. of the Judicial Code) or the act of October 22, 1913 (38 Stat. 219, c. 32), abolishing the Commerce Court and transferring its jurisdiction to the District Courts of the United States, upon which the defendants rely as limiting the authority of the court in the premises.

[3] It further appears from the affidavits submitted by the petitioners, which are not controverted, that in the event the decree of this court denying the injunction prayed by the petitioners and dismissing their bill should be reversed by the Supreme Court, a great and irreparable injury would in the meantime have resulted to the petitioners by reason of the diversion of part of their traffic entering and leaving Nashville by competing railroads enabled to obtain access to local industries on their lines through the enforcement of the order of the Interstate Commerce Commission, and the expense and disturbance of their business caused by changing their former practices in the meantime so as to comply with the order of the Commission and the publication of new tariffs. And, on the other hand, it does not clearly appear that any particular individuals would suffer material financial injury in the event the order of the Commission is stayed for a short time so as to enable the petitioners to perfect their appeal and to present to the Supreme Court an application for a preliminary suspension order of the Commission pending the hearing of the appeal in the Supreme Court, in accordance with the practice recognized in Omaha Street Railway v. Interstate Commission, 222 U. S. 582, 583, 32 Sup. Ct. 833, 56 L. Ed. 324.

It results, therefore, that in the opinion of a majority of the court, in view of the importance of the questions involved in this cause, and the irreparable injury which will result to the petitioners from the enforcement of the decree in this cause, if reversed, unless a short

stay is granted, that the decree whose entry has heretofore been directed, denying the preliminary injunction and dismissing the petition, should, under all the circumstances of the case, in the exercise of a sound discretion, be modified so as to provide that if the petitioners shall within 30 days from the entry of such decree take and perfect an appeal to the Supreme Court, and also present to that court, within such 30 days, a petition for a preliminary suspension of the order of the Commission pending the determination of such appeal, the enforcement of the order of the Commission should be stayed until a decision by the Supreme Court upon the question of granting such preliminary suspension of the order of the Commission shall be rendered; provided, however, further, that in addition to the ordinary appeal bond the petitioners shall also, at or before the time of the allowance of an appeal, make and file in this court their bond, in the penal sum of $25,000, payable to the clerk of this court, with sureties to be approved by him, conditioned that in the event the petitioners shall not, within 30 days from the entry of such decree, take and perfect an appeal to the Supreme Court and also present to that court, within such 30 days, a petition for a preliminary suspension of the order of the Commission pending such appeal, or in the event the appeal from the decree of this court is dismissed by the petitioners, or the decree of this court denying the interlocutory injunction and dismissing the petition is affirmed by the Supreme Court, they will, on demand, pay to the party or parties entitled thereto all legal damages accruing to them by reason of the stay of the order of the Commission granted by such decree.

WESTERN UNION TELEGRAPH CO. v. GEORGIA R. & BANKING CO. et al.

(District Court, S. D. Georgia. October 11, 1915.)

1. TELEGRAPHS AND TELEPHONES ⟹11—CONSTRUCTION OVER RAILROAD RIGHT OF WAY—EASEMENT.

   Under Civ. Code Ga. 1910, § 3645, which provides that "a parol license * * * is not revocable when the licensee has executed it and in so doing has incurred expense," but that in such case it becomes an easement running with the land, a telegraph company, which with the consent of a railroad company built its lines upon the latter's right of way, and has maintained, renewed, and operated the same for 40 or 50 years, acquired a perpetual easement.

   [Ed. Note.—For other cases, see Telegraphs and Telephones, Cent. Dig. § 7; Dec. Dig. ⟹11.]

2. EASEMENTS ⟹9—TELEGRAPH LIENS—PRESCRIPTION.

   The provision of Civ. Code Ga. 1910, § 4164, that "permissive possession cannot be the foundation of a prescription until an adverse claim and actual notice to the other party," does not mean that possession may not originate in permission, especially as applied to ways and like cases, where the possession is necessarily adverse from the beginning; and a telegraph company, which built its lines over the right of way of railroad companies under parol licenses, followed by their maintenance and operation for from 20 to 50 years under claim of right, acquired a prescriptive right to such maintenance.

   [Ed. Note.—For other cases, see Easements, Cent. Dig. §§ 25, 27-33; Dec. Dig. ⟹9.]

---

3. DEDICATION ⟹4—ACTS CONSTITUTING—PUBLIC CHARACTER OF USE.

There can be no dedication of an easement, strictly speaking, except to the public generally; and a telegraph company, building its line on the right of way of a railroad company under a parol license, cannot claim an easement on the ground of dedication.

[Ed. Note.—For other cases, see Dedication, Cent. Dig. § 1; Dec. Dig. ⟹4.]

4. TELEGRAPHS AND TELEPHONES ⟹11—CONTRACT BETWEEN TELEGRAPH AND RAILROAD COMPANY—CONSTRUCTION.

Complainant telegraph company and its predecessors in interest had constructed and maintained telegraph lines over the right of way of defendant railroad company and its predecessors under parol licenses for periods of from 20 to 40 years, when in 1896 a new contract was made between the parties. At that time, by reason of the nature and purpose of its structures and its long occupation, complainant had acquired a perpetual easement to maintain such lines. The contract provided in detail for reciprocal services to be performed by the parties, that it should supersede all prior contracts, and continue in force for a term of 10 years, after which it should be terminable on one year's notice. *Held* that, in view of the situation of the parties, the contract must be construed as intended only to govern the relations between the parties in the operation of complainant's lines, and not as affecting in any way the duration of complainant's easement to maintain such lines.

[Ed. Note.—For other cases, see Telegraphs and Telephones, Cent. Dig. § 7; Dec. Dig. ⟹11.]

5. TELEGRAPHS AND TELEPHONES ⟹11—RIGHT OF WAY—RIGHT OF RAILROAD COMPANY TO REMOVE LINES.

Where a telegraph company has for many years maintained and operated its lines over the right of way of a railroad company, as a part of a vast national system, under a right which it thought sufficient to entitle it to remain there, its lines are so affected by a public use that in case its claim proves to be unfounded, and the laws of the state give it the right to condemn right of way therefor, a federal court has power to enjoin their removal by the railroad company, and to fix the amount of compensation it must pay for its right of way, although it might not have jurisdiction of condemnation proceedings in invitum under the state statute, if the company were not already in possession.

[Ed. Note.—For other cases, see Telegraphs and Telephones, Cent. Dig. § 7; Dec. Dig. ⟹11.]

6. EASEMENTS ⟹1—NATURE AND INCIDENTS.

An "easement," such as for construction and maintenance of a telegraph line on a railroad right of way, as distinguished from a pure or technical easement, is an interest in land, which confers upon its owner some right, benefit, dominion, or lawful use out of or over the estate of another, and is a species of incorporeal hereditament.

[Ed. Note.—For other cases, see Easements, Cent. Dig. §§ 1, 2, 5–7; Dec. Dig. ⟹1.

For other definitions, see Words and Phrases, First and Second Series, Easement.]

7. DEDICATION ⟹1—NATURE AND REQUISITES.

"Dedication" is the giving of land, or an easement therein, for the use of the public, and applies only where the gift is for the use and benefit of the public generally.

[Ed. Note.—For other cases, see Dedication, Cent. Dig. §§ 8, 10–12; Dec. Dig. ⟹1.

For other definitions, see Words and Phrases, First and Second Series, Dedication.]

In Equity. Suit by the Western Union Telegraph Company against the Georgia Railroad & Banking Company, the Louisville & Nashville Railroad Company, and the Atlantic Coast Line Railroad Company. On motion by defendants to dismiss bill. Motion denied.

The Western Union Telegraph Company brought its bill against the Georgia Railroad & Banking Company, the Louisville & Nashville Railroad Company, and the Atlantic Coast Line Railroad Company, making the following allegations: Complainant is a citizen of the state of New York, the Georgia Railroad & Banking Company (hereinafter called the railroad company) is a citizen of the state of Georgia, the Louisville & Nashville Railroad Company is a citizen of Kentucky, and the Atlantic Coast Line Railroad Company is a citizen of the state of Virginia. The suit is of a civil nature in equity, in which the matter in controversy exceeds, exclusive of interest and costs, the sum or value of $3,000, and is between citizens of different states, and arises under the Constitution or laws of the United States, and is a suit to enforce a legal or equitable claim upon, and to remove a cloud on the title of, property within the Southern and Northern districts of Georgia. Complainant was incorporated in the state of New York in the year 1851 for the purpose of erecting, maintaining, and operating telegraph lines throughout the states and territories of the United States and other countries, and was authorized to purchase, lease, and acquire such property, rights, franchises, and privileges as might be necessary, including those belonging to any other telegraph company. On July 24, 1866, Congress passed what is known as the "Post Roads Act," providing that any telegraph company then or thereafter organized under the laws of any state of the United States should have the right to construct and operate telegraph lines over any of the post roads, etc., of the United States, upon filing its written acceptance of the provisions of said act with the Postmaster General, which was done by the telegraph company on June 8, 1867. Congress in 1838, and again in 1872, passed acts making each and every railroad within the limits of the United States then or thereafter completed a post route or post road. The General Assembly of the state of Georgia has granted to all telegraph companies (including complainant) the right to construct and maintain their lines along the rights of way of the several railroads of the state, and has conferred upon the telegraph companies the power of eminent domain and the right to condemn easements over the rights of way and property of the railroad companies of the state as well as over other property in the state.

The verified petition further alleges the construction, maintenance, and operation of telegraph lines upon the right of way of the Georgia Railroad & Banking Company from a period antedating the War between the States, continuously up to the present time, at great cost and expense to complainant and its predecessors; that these telegraph lines were intended to become and did become permanent and important parts, unlimited in duration and existence, of the systems of telegraph belonging to the various telegraph companies constructing and operating the same; that neither the railroad companies nor any other person at any time objected to the construction, maintenance, and operation of these telegraph lines, but that same was well known to the defendants, and to the public generally, and that they assented to the same; that different telegraph companies (naming them) in succession owned and operated these telegraph lines, until they were duly conveyed, together with all their appurtenances and easements, to the Western Union Telegraph Company, the complainant, a portion of said lines having been so conveyed to complainant on April 5, 1867, and the remainder on July 10, 1876; that the Southern Express Company was incorporated under the laws of Georgia in 1861, and was authorized to do a telegraph business, and that on October 1, 1865, a written contract was made between the Georgia Railroad & Banking Company and the Southern Express Company, whereby the former gave to the latter an irrevocable, assignable, and perpetual easement for the construction, reconstruction, maintenance, and operation of its telegraph lines upon and along the right of way of the railroad company, including all its branches. On October 19, 1872, the Macon & Augusta Rail-

road Company made a similar contract with the Southern & Atlantic Telegraph Company, of New York, giving to it a perpetual, assignable, and irrevocable easement for the maintenance, construction, and operation of its telegraph lines upon and along the right of way of the Macon & Augusta Railroad Company, which afterwards sold its railroad line (the Macon Branch) to the Georgia Railroad & Banking Company. Subsequently, on April 5, 1867, the Southern Express Company sold and conveyed its telegraph lines, easements, etc., to complainant, and on July 10, 1876, said Southern & Atlantic Telegraph Company sold and conveyed its telegraph lines to complainant, and thereupon complainant came into possession of all the telegraph lines, stations, etc., in controversy in this case, and became possessed of a perpetual, assignable, and irrevocable easement for the construction, maintenance, and operation of said lines of telegraph along the lines of the railroad company.

Complainant and its predecessors in title have from the very beginning, to wit, from a period antedating the Civil War, been in the quiet, peaceable, open, continuous, notorious, and exclusive possession of said lines of telegraph, and of the portion of the right of way of the railroad company occupied by same, with necessary easements and appurtenances belonging to same, and during all of said time they, at great cost and expense, constructed, reconstructed, maintained, and operated said telegraph lines as a component, important, and permanent part of their systems of telegraph which extended all over the United States; that in 1881 the Georgia Railroad & Banking Company leased all of the railroad lines owned by it to W. M. Wadley for 99 years, and subsequently this lease was acquired by the other defendants to this case, namely, the Louisville & Nashville Railroad Company and the Atlantic Coast Line Railroad Company; that for more than 20 years, to wit, for 40 years or more, complainant has been in the open, exclusive, etc., possession of said telegraph lines and easements, and that same are a component part of its vast telegraph system, consisting of more than 192,000 miles of poles and cables and over 900,000 miles of wires, covering practically the entire territory of the United States, and extending also to foreign countries; that these telegraph lines are necessary and indispensable links in its vast telegraph system, without which it would not be able to perform its duties to the public or to the United States government.

On the 8th day of July, 1896, the Georgia Railroad & Banking Company and the Western Union Telegraph Company entered into a "working contract" for the exchange of reciprocal services, said contract to continue for 10 years and thereafter for one year after express notice of a desire from either party to terminate same; this contract being made subsequent to the above-mentioned lease made by the Georgia Railroad & Banking Company to the Atlantic Coast Line Railroad Company and the Louisville & Nashville Railroad Company. On August 10, 1912, said lessees notified complainant to remove its poles and wires from off the right of way of the Georgia Railroad & Banking Company, and that if complainant failed to do so within a year they stated that they would seize and take possession of the telegraph lines and property of complainant occupying the right of way aforesaid and dispose of same as they saw fit. Complainant thereupon brought this bill in equity, praying for an injunction to prevent the defendants from interfering with its telegraph lines, for a decree determining that complainant has a perpetual easement over the right of way of the railroad company, to remove a cloud from its title and to establish its rights to same, to prevent immeasurable and irreparable loss and damage, and to avoid a multiplicity of suits and large damages and penalties that would be entailed upon complainant for failure to promptly transmit telegraph messages as required by its duty to the public. Complainant also prayed in the alternative that, if it did not have a perpetual and irrevocable easement as claimed, inasmuch as it had already taken and occupied said right of way, it should be allowed to remain thereon, and that a decree should be entered for the amount it should pay the railroad company for such easement; and complainant also prayed for general and complete relief.

Defendants duly filed their motion to dismiss said bill upon several grounds, to wit: (1) That the Post Roads Act invoked by complainant gave

it no right to the easement in question without the consent of the railroad company, or without condemning same, and that the bill did not aver satisfaction of either of these conditions; (2) that the act of the General Assembly of Georgia conferring on telegraph companies the right to condemn an easement on the right of way of railroads was unconstitutional and null and void as interfering with interstate commerce, and that the Post Roads Act had withdrawn from the states the jurisdiction of such matters, and that complainant did not aver that it had exercised or was attempting to exercise the right of condemnation; (3) the bill was defective, in that it did not set out copies of the contracts under which it was alleged that the predecessors of complainant had occupied the right of way of the railroad company between the years of 1850 and 1861; (4) the bill failed to allege adverse possession, but, on the contrary, showed that complainant's possession has all the time been permissive; (5) the bill shows no title to the easement in question in complainant, and the case is not one coming within the exercise of the court's jurisdiction to remove a cloud from a title; (6) the bill fails to show ground for jurisdiction to prevent a multiplicity of suits; (7) complainant pleads no facts which give the court jurisdiction to decree in invitum against defendants a title to the easement in question and to fix the compensation to be paid therefor by complainant to defendants, and also that complainant has an adequate remedy at law; and (8) the bill is multifarious and duplicitous.

Dorsey, Brewster, Howell & Heyman, of Atlanta, Ga., Wm. H. Barrett, of Augusta, Ga., and W. L. Clay, of Savannah, Ga., for complainant.

Jos. B. Cumming, Bryan Cumming, and J. M. Hull, Jr., all of Augusta, Ga., for defendants.

LAMBDIN, District Judge (after stating the facts as above). This case is now before me on motion filed by the defendants to dismiss the bill of complainant upon the grounds above stated.

[1] 1. The first question to be determined is whether, under the allegations of the bill, the telegraph company obtained a perpetual and irrevocable easement in and upon the right of way of the railroad company for the construction, maintenance, and operation of its telegraph lines. The telegraph company alleges that it and its predecessors derived title to such an easement in several different ways, as stated above, to wit: (a) By an executed parol license; (b) by express grant; (c) by prescription; and (d) by express or implied dedication to public use. If the allegations of the bill are sufficient to show by reasonable intendment and construction that the telegraph company acquired title to the easement in question in either of the four ways above mentioned, its title would be sufficient to withstand the attack made on it.

[6] (a) An easement of the kind involved in this case, as distinguished from a pure or technical easement, is an interest in land which confers a right upon its owner to some profit, benefit, dominion, or lawful use out of or over the estate of another. 10 Am. & Eng. Enc. (2d Ed.) 399; Huyck v. Andrews, 113 N. Y. 81, 20 N. E. 581, 3 L. R. A. 789, 10 Am. St. Rep. 432. Such an easement is a species of incorporeal hereditament, and, according to general law, can be acquired by grant, express or implied, or by prescription. 10 Am. & Eng. Enc. (2d Ed.) 409.

Under the laws of Georgia, however, this easement can be acquired in a third way, namely, by a parol license which has been executed and upon the faith of which the licensee has incurred expense. This

method of acquiring an easement is set out in the Code of Georgia of 1910 (section 3645), which is as follows:

"Sec. 3645. A parol license is primarily revocable at any time, if its revocation does no harm to the person to whom it has been granted, but is not revocable when the licensee has executed it and in so doing has incurred expense. In such case it becomes an easement running with the land."

This principle of the Georgia law has been applied as respects similar easements in the following cases: Sheffield v. Collier, 3 Ga. 82; Brantley v. Perry, 120 Ga. 760, 48 S. E. 332; Cherokee Mills v. Standard Cotton Mills, 138 Ga. 856, 76 S. E. 373; Whelchel v. Gainesville, etc., R. R. Co., 116 Ga. 431 (5), 42 S. E. 776; Southwestern Railroad v. Mitchell, 69 Ga. 114.

Complainant alleges that its predecessors in title went upon the railroad right of way involved in this case more than 40 or 50 years ago, and at great cost and expense constructed, maintained, and operated the telegraph lines, offices, and stations in question, and reconstructed, maintained, and operated same at great expense continuously as a component and necessary link of their systems of telegraph, and that all this was done with the full knowledge, permission, and assent of the railroad companies. Under the Georgia statute, which I think is controlling in the matter, I am of the opinion that the allegations of the bill on this question are sufficient to make out the acquisition and ownership on the part of the telegraph company of an easement over the railroad right of way in question.

The courts have uniformly held that in the very nature of things the construction of telegraph lines and similar works necessarily implies permanency and perpetuity of use, and that, where same are constructed under a license or agreement in which the period of the grant is not limited, a perpetual easement is necessarily granted. McKell v. C. & O. R. R. Co., 175 Fed. 321–330–332, 99 C. C. A. 109, 20 Ann. Cas. 1097; United States v. B. & Q. R. R. Co., 1 Hughes, 145, Fed. Cas. No. 14510; Louisville v. Cumberland Telephone Co., 224 U. S. 663, 32 Sup. Ct. 572, 56 L. Ed. 934; City of Owensboro v. Cumberland Tel. & Tel. Co., 230 U. S. 58, 65, 33 Sup. Ct. 988, 57 L. Ed. 1389; Western Union Tel. Co. v. Penn. Co., 129 Fed. 849, 64 C. C. A. 285, 68 L. R. A. 968; Ashland Electric Power & Light Co. v. City of Ashland (D. C.) 217 Fed. 158.

In the City of Owensboro Case, cited above, Mr. Justice Lurton stated as follows:

"That the grant in the present case was not a mere license is evident from the fact that it was upon its face neither personal nor for a temporary purpose. * * * The grant by ordinance to an incorporated telephone company, its successors and assigns, of the right to occupy the streets and alleys of a city with its poles and wires for the necessary conduct of a telephone business, is a grant of a property right in perpetuity, unless limited in duration by the grant itself, or as a consequence of some limitation imposed by the general law of the state [citing several cases]. If there be authority to make the grant, and it contains no limitation or qualification as to duration, the plainest principles of justice and right demand that it shall not be cut down, in the absence of some controlling principle of public policy. This conclusion finds support from a consideration of the public and permanent character of the business such companies conduct and the large investment which is generally contemplated. If the grant be accepted and the contem-

plated expenditure made, the right cannot be destroyed by legislative enactment or city ordinance based upon legislative power, without violating the prohibitions placed in the Constitution for the protection of property rights."

Some of the authorities cited above deal with contracts, instead of with parol licenses, and hold that in the nature of things a contract granting an easement or right of way to telegraph companies and similar enterprises necessarily implies an irrevocable grant in perpetuity, and upon authority and reason the same principle is applicable where possession is taken under a parol license for similar works of a permanent nature. The Supreme Court of California, in the case of Stoner v. Zucker, 148 Cal. 516, 83 Pac. 808, 113 Am. St. Rep. 301, 7 Ann. Cas. 704, lays down the same principle in the following language, applying the same in the case of an irrigating ditch:

"Where one enters upon the land of another under a parol license, and expends money or labor in the execution of the license, it becomes irrevocable for so long a time as the nature of it calls for its continuance."

In said case the court held that the ditch in question was from its very nature a permanent structure, and that therefore the license was to be construed to be a continuous and perpetual easement, irrevocable in its nature, and that in every such case the licensor would be held to have conveyed an easement commensurate in its extent and duration with the right to be enjoyed and with the nature of the thing for which the license was given. Judge Lurton, speaking for the Circuit Court of Appeals of the Sixth Circuit, in the case of City of Morristown v. Telephone Co., 115 Fed. 304, on page 307, 53 C. C. A. 132, on page 135, said:

"Consent to the occupancy of the streets by the poles and wires of the telephone company for the purpose of maintaining a public telephone system was the grant of an easement in the streets and the conveyance of an estate or property interest, which, being in a large sense the exercise of a proprietary or contractual right rather than legislative, was irrevocable after acceptance, unless the power to alter or revoke was reserved. This principle has too many times been declared and applied by this court to require further elaboration [citing many authorities]."

There is a conflict among the courts of the different states of the Union in reference to the question whether a parol license, which has been executed by the licensee and upon the faith of which he has expended money, is revocable or not; some courts holding that such an executed license is revocable, while others hold that it is irrevocable. This question, however, is not an open one in Georgia, because under section 3645 of the Code of Georgia, quoted above, it is expressly provided that a parol license is not revocable when the licensee has executed it, and in doing so has incurred expense, and that in such case it becomes an easement running with the land.

(b) Complainant also alleges that it acquired title to the easement in question by express written grant. These grants are those of October 1, 1865, from the Georgia Railroad & Banking Company to the Southern Express Company (from which the telegraph company derived title), and from the Macon & Augusta Railroad Company (which conveyed title to a portion of the lines in question to the Georgia Rail-

road & Banking Company) to the Southern & Atlantic Telegraph Company (the predecessor of the Western Union Telegraph Company), dated October 19, 1872. A reading of these two contracts discloses beyond question that the predecessors of the Western Union Telegraph Company were granted perpetual easements in and upon the rights of way of the said railroads for the construction, maintenance, and operation of telegraph lines on same, and that such grants became irrevocable and assignable upon the construction of said telegraph lines as long as same should be kept in operation. The bill also alleges that said express company and said Southern & Atlantic Telegraph Company in due course respectively conveyed their telegraph lines, easements, and appurtenances to the Western Union Telegraph Company, which is now the owner and holder of same. The court is of the opinion that title to the easement in question by grant is therefore sufficiently alleged.

[2] (c) The telegraph company also claims title to said easement by prescription. Section 4170 of the Code of Georgia of 1910 is in the following language:

"An incorporeal right which may be lawfully granted, as a right of way or the right to throw water upon the land of another, may be acquired by prescription."

See, also, Phinizy v. Augusta, 47 Ga. 260; 22 Am. & Eng. Enc. of Law, 1182, 1187.

The bill alleges that complainant and its predecessors in title have been in possession of the easement in question for from 20 to 50 years, and that such possession has been public, continuous, open, notorious, exclusive, uninterrupted, and peaceable, and accompanied by a claim of right. These allegations satisfy the statutes and the decisions of the highest court of this state, on the subject. See Code of Georgia of 1910, §§ 3641, 3810, 4163, 4164.

The principal argument of counsel for defendants on this point is that the possession of the complainant and its predecessors was permissive, and not adverse, and they rely upon the concluding sentence of section 4164 of the Georgia Code, which is in the following language:

Permissive possession cannot be the foundation of a prescription, until an adverse claim and actual notice to the other party."

This expression of the law, however, does not mean that the possession must not originate in permission. If, for instance, a grantor executes a deed to his grantee, and in pursuance thereof permits him to take possession of the property granted, or if a licensor gives a parol license to a licensee for a right of way over his premises (upon the faith of which the licensee makes an outlay of money in improvements necessarily permanent in their nature), then in both of these instances the possession originates in permission, but it thereupon becomes adverse, and does not continue to be permissive. Mr. Justice Lamar, in the case of Kirkland v. Pitman, 122 Ga. 256, on page 259, 50 S. E. 117, on page 118, said:

"Possession must be adverse in order to form the basis for prescription. A notable exception exists, however, in the case of private ways. The use may originate in permission, and yet may ripen by prescription."

The Supreme Court of Georgia, in the case of Everedge et al. v. Alexander, 75 Ga. 858, in the fourth headnote, lays down the principle in the following language:

"The doctrine that prescriptive titles to the fee in real estate by seven years' possession cannot originate in consent, because the possession there must be adverse all the time, does not prevail or apply to a right of way under the act of 1872 and the Code, for the reason that knowledge and acquiescence of the owner of the lands is of the very essence of the right of way against the owner."

Of course, there is a distinction between what is known as a private way (which was involved in the cases cited) and the easement claimed by the telegraph company in this case; but the rights involved in said matters are very similar in their nature, and the court is of the opinion that the decisions of the Supreme Court of Georgia cited above are applicable to the question here involved.

The Supreme Court of Washington, in the case of Lechman v. Mills, 46 Wash. 624. 91 Pac. 11, 13 L. R. A. (N. S.) 990, 13 Ann. Cas. 923, said:

"A parol grant of an easement which is void under the statute of frauds may become the basis for an adverse possession which will ripen into title by the lapse of time."

As stated, also, in the case of Coventon v. Seufert, 23 Or. 548, 32 Pac. 508:

"It is no objection to granting an easement by prescription that the same was originally granted * * * by parol. That the use began by permission does not affect the prescriptive right, if it has been used and exercised for the requisite period under a claim of right."

The Supreme Court of New Hampshire, in the case of Wells v. Parker, 74 N. H. 193, 66 Atl. 121, said:

"While no estate passed for want of a deed, the parties may have treated the transaction as having that effect; and if they did, the donee's subsequent uninterrupted possession might reasonably be deemed to exist under a claim of ownership, with the knowledge and acquiescence of the donor. The legal effect of the transaction did not preclude the parties from claiming that it had a different effect, which, if persisted in for sufficient length of time and attended with uninterrupted possession, would give the donee * * * the equivalent to a title by deed."

In Gyra v. Windler, 40 Colo. 366, 91 Pac. 36, 13 Ann. Cas. 841, it was held that where a donee of a right of way across the property of another, which was granted by parol had uninterruptedly used same for more than the statutory period, with the knowledge and acquiescence of the donor and his grantees, his right to the use thereof could not be terminated by them.

Counsel for defendants insist in their motion that the allegations of the bill as to a prescriptive title are fatally defective, for the reason that complainant nowhere alleges that its possession was "adverse." The Supreme Court of Georgia in the case of Moody v. Fleming, 4 Ga. 116 (5), 48 Am. Dec. 210, has defined "adverse possession" to be possession

under color and claim of title. We think that, while compiainant has not used the word "adverse" in the allegations of its bill, still it has used expressions which are tantamount thereto, and that therefore the allegations of the bill are sufficient to show title by prescription.

[3, 7] (d) Complainant also alleges in its bill that there has been a dedication, express or implied, of the easement in question to public use. Dedication is the giving of land or an easement therein for the use of the public, and same applies only where the gift is for the use and benefit of the public generally. "There can be no dedication, strictly speaking, to private uses, nor even to uses public in their nature, but the enjoyment of which is restricted to a limited part of the public." Thus a railroad company cannot claim lands by dedication. 9 Am. & Eng. Enc. of Law (2d Ed.) 23; Lake Erie, etc., R. R. Co. v. Whitham, 155 Ill. 514, 40 N. E. 1014, 28 L. R. A. 612, 46 Am. St. Rep. 355. On principle, therefore, complainant cannot claim title to the easement in question by dedication. While this is true, telegraph companies are public service corporations and common carriers, and also instruments of commerce, both state and interstate Pensacola Tel. Co. v. W. U. Tel. Co., 96 U. S. 1, 24 L. Ed. 708; W. U. Tel. Co. v. Texas, 105 U. S. 464, 26 L. Ed. 1067; Ratterman v. W. U. Tel. Co., 127 U. S. 425, 8 Sup. Ct. 1127, 32 L. Ed. 229.

Telegraph companies are given great rights and powers, both by national laws and also by the statutes of Georgia; but these laws and statutes also impose certain public duties and obligations upon the telegraph companies. The property of the telegraph company, including the easement or rights of way possessed by them, are therefore affected with a public use. This principle is important in this case only as causing the courts to be reluctant to deprive such quasi public corporations of these rights of way, which may have been already taken and occupied by them, in the event they are not legally entitled to same, when proper compensation may be decreed by the court to be paid for same. But this matter will be treated in a further division of this opinion.

[4] 2. The principal contention in this case, however, is as to the force and effect of the contract made between the Western Union Telegraph Company and the Georgia Railroad & Banking Company on the 8th day of July, 1896. It is contended on the part of the railroad company that this contract, in the first place, showed that the occupation by the telegraph company of the right of way of the railroad company was only permissive, and that, in the second place, said contract limited the easement of the telegraph company in said right of way to a term of 10 years from July 1, 1896, or until after the expiration of one year after written notice by the railroad company of an intention to terminate the same. The telegraph company, on the other hand, contends that this last-named contract was merely a reassurance and confirmation of the easement already owned by it, and that the contract did not attempt to limit the duration of this easement, but was merely intended to provide for reciprocal services to be performed by the two contracting parties.

The construction of this contract is therefore the pivotal question in the case. Was it intended by the parties that by this contract the rights

of the telegraph company to the easement in question should terminate at the expiration of the period mentioned? In order to determine this question, it is necessary to consider the situation and rights of the parties at the time the contract was made, the purposes of their incorporation and their business, and the objects sought by the contract. All the surrounding facts and circumstances should be carefully considered, so as to arrive at the true intent of the parties. It is recited in the beginning of the contract, or preamble, that:

"Whereas, the railroad company owns and controls and operates certain railroad lines [describing them], and the telegraph company owns lines of telegraph poles and wires which are operated under the provisions of the agreements hereinafter mentioned; and whereas, it is desirable in the interest of both parties hereto that a new agreement shall be entered into between them."

In this preamble, the ownership of the railroad lines by the one party and of the telegraph lines by the other party is admitted, and it is also stated that the telegraph lines are operated by the telegraph company under the provisions of certain agreements, and that it is desirable that a new agreement should be entered into between the parties. The object or purpose of the contract is therefore set out in this preamble. This object is there stated to be the execution of a new agreement. A new agreement for what? The preamble expressly states that it was a new agreement to take the place of certain old agreements "under which the telegraph lines were operated." It is therefore clearly stated in this preamble that the new agreement was intended to cover the operations by the telegraph company of its lines.

At the time this last contract was made, it is clear, from the considerations set forth in the first part of this opinion, that the telegraph company had a perpetual irrevocable easement in and upon the right of way of the railroad company. The telegraph company was incorporated for maintaining telegraph lines and transmitting messages over same, its business in this line was an extensive one, and its telegraph lines, stations, etc., along the right of way of the railroad company were an important link in its vast network of wires and in its business, which reached to all parts of the United States and to foreign countries. Such being the situation of the parties at the time, is it probable that the telegraph company intended, after the expiration of the period mentioned in said last-mentioned contract, to cut out its business along the line of the railroad company and to remove its property therefrom, and thus close out a business that had been in process of development for more than a half a century? To ask this question is to answer it. It is inconceivable to the mind of the court that the telegraph company could have agreed to have exchanged the perpetual easement held by it for a mere 10-year lease, with the prospect of having to remove its lines and abandon its business along the line of the railroad company at the expiration of that time.

It is contended in behalf of the defendants that this contract contains in the sixth paragraph a recognition on the part of the telegraph company that it did not have a perpetual easement in the right of way in question, because it accepted such an easement under and by virtue of said paragraph, which is in the following language:

"The railroad company, so far as it legally may, hereby grants and agrees to assure to the telegraph company the exclusive right of way (except as hereinafter mentioned), on, along, and under the line, lands, and bridges, and on both sides of the tracks of the railroads now or hereafter covered by this agreement, and any extensions and branches thereof, for the construction, maintenance, operation, and use of lines of poles and wires," etc.

The language here used, in the opinion of the court, is not inconsistent with the idea that the telegraph company already had a right of way along the lines of the railroad company then existing, and that the purpose of same was to give a reassurance and confirmation of this easement, and also to grant a right of way along the tracks of the railroad company and any extensions and branches thereof, along which the telegraph company had not then constructed its lines, and also to give it the right to occupy both sides of the track where it already occupied one side, and, lastly, to make these grants and privileges exclusive. The language used is no recognition that the telegraph company did not already have title. Even if the language used could be construed as granting to the telegraph company the right of way or easement already held by it, it is well settled that the acceptance of such a grant by the telegraph company would not estop it from setting up and maintaining that it already had title to this easement and did not acquire same by such grant.

Even if the telegraph company had never occupied the right of way of the railroad company before making this contract of 1896, but had gone upon same under said contract, it is clear to the mind of the court that even in such a case the easement acquired by the telegraph company under the grant would not have terminated at the end of the period of 10 years mentioned in the contract. The contract, even if it had been the first and only contract between the parties, and the one under which the telegraph company first took possession of its easement as above supposed, may be analyzed as consisting of two parts—one granting to the telegraph company the right to go on the railroad right of way and construct its lines, and the other providing for the operation of these lines and an exchange of reciprocal services between the parties. When the telegraph company constructed its lines on the right of way of the railroad company, the first part of the contract became executed, while the other provisions of the contract were continuous and executory in their nature. When the first part of the contract was thus executed, the telegraph company became vested with title to the easement in question, which under the authorities cited in the first part of this opinion became permanent and irrevocable; and while the contract for the continuing and reciprocal services could be terminated, the title so acquired by the telegraph company to the easement in question could not be divested, because there was no defeasance or forfeiture clause in the contract.

Much reliance is placed by defendants upon the twelfth paragraph of the contract of 1896, which provides that said contract should supersede the contract of 1865 between the Georgia Railroad & Banking Company and the Southern Express Company, and a contract made in 1880 between the telegraph company and the railroad company in respect to a money limit of free telegraphic and transportation serv-

ice, and the contract of 1872 between the Southern & Atlantic Telegraph Company and the Macon & Augusta Railroad Company, as well as any other agreements between the parties or their predecessors. We think that it is clear that only the provisions of these contracts relative to the operations of the telegraph lines and the reciprocal services to be performed by the parties were "superseded" under the terms of this paragraph of the contract. Title had already vested in the telegraph company, and it already owned the easement in question, and the word "supersede" cannot, in our opinion, be made to effect a conveyance or relinquishment of title. The word "supersede" only operated upon the agreements in the contracts in question relative to the services to be performed by the parties, and to the executory or working" agreements contained in the contract, and was not intended to operate on the title to the property, or to reconvey same to the railroad company at the expiration of the time in question.

The thirteenth paragraph of the contract provides that:

"The provisions of this agreement shall be and continue in force for and during the term of 10 years from the 1st day of July, 1896, and shall continue after the close of said term until the expiration of one year after written notice shall have been given after the close of said term by either party to the other," etc.

From the foregoing reasoning, we are clear that the purpose of this clause was not to terminate the easement of the telegraph company, or to effect a relinquishment or reconveyance of the title held by it, but merely to terminate the provisions of the contract providing for reciprocal services to be performed by the parties thereto.

As further illustrative of the nature of the contract of 1896, it may be well to recall the fact that the contract that had previously been in existence between the two parties had been made from 24 to 30 years before that date, and they were in the main made between the predecessors of the parties in interest, and not between the parties themselves. These contracts were old and meager in terms, and were made when the operations of neither of the parties were as extensive and complicated as they were in 1896. Such being the case, it is quite clear that it was the intention of the parties to rearrange these contracts and to bring them up to date. The new contract went into great detail and was quite exhaustive as to the services to be performed by each of the parties thereto, and it is clear to the mind of the court that the real purpose of the contract was to cover these services, and not to provide for the duration of the easement of the telegraph company. Such a drastic, sweeping, and extraordinary thing as the destruction and abandonment of this easement, if it had been intended, would not have been left to construction, but would have been expressly set out, and nowhere in the contract is it provided that at the expiration of the short period in question the telegraph company should abandon its easement, and give same up forever, and remove its lines from the right of way of the railroad company.

Circuit Judge Van Devanter, in the case of Choctaw, etc., Railroad v. Bond, speaking for the Circuit Court of Appeals of the Eighth Circuit, in 160 Fed. 403, 87 C. C. A. 355, said:

"A contract should not be construed as providing for an unreasonable and oppressive forfeiture, if its language fairly admits of a more equitable interpretation."

In this case he cited Washington, etc., Co. v. Cœur d'Alene, etc., Co., 160 U. S. 77, 101, 16 Sup. Ct. 231, 40 L. Ed. 355. As stated by the Supreme Court of the United States in the case of Joy v. St. Louis, 138 U. S. 2, 38, 11 Sup. Ct. 253, 34 L. Ed. 843, railroad contracts respecting easements, a matter concerning the interest of the public, "are to be construed liberally in favor of the public."

Circuit Judge Gray, for the United States Circuit Court of Appeals of the Third Circuit, in the case of Western Union Telegraph Co. v. Penn. Co., 129 Fed. 849, 64 C. C. A. 285, 68 L. R. A. 968, in construing a similar contract to the one here involved, at the bottom of page 867 of 129 Fed., page 303 of 64 C. C. A., said:

"On the whole, we are of opinion that the relations created between the parties by the agreement in question were not merely personal, as in cases of partnership, agency, master and servant, and the like, but that rights in property and the user thereof, rights in the nature of an easement, were conferred upon the appellant, and that no right in the appellee to revoke or determine the same, in the absence of express stipulation to that effect, is to be inferred from the silence of the contract in that respect, or from its terms, purpose, or inherent nature."

This case is referred to approvingly in the case of McKell v. Chesapeake & O. Ry. Co. (Circuit Court of Appeals, Sixth Circuit) 175 Fed. 321, and near the bottom of page 322, 99 C. C. A. 109, 20 Ann. Cas. 1097.

In the case of St. Paul, M. & M. Ry. Co. v. W. U. Tel. Co. et al. (Circuit Court of Appeals, Eighth Circuit) 118 Fed. 497, 515, 55 C. C. A. 263, 281, the court had under consideration a very similar contract to the one involved here. In fact, the present contract seems to be a stock form of contract, used very generally. In this case, which is directly in point, the court said:

"In view of the considerations aforesaid, it is likewise manifest, we think, that the Western Union Telegraph Company did not enter into contract B with the understanding that the clause found in the twelfth paragraph, declaring that it should 'continue in force for the term of 10 years,' would have the effect of transferring to the railway company, at the end of the contract period, all the lines—those already existing, of which it was then a joint owner, as well as those which it might subsequently erect at its sole cost and expense. That view of the effect of the contract, involving, as it did, the relinquishment on its part of its interest in the lines jointly owned, and in other lines of telegraph, erected at its own expense, which might be 2,000 or 3,000 miles in length, and involving, as well, the disruption pro tanto of its telegraphic system, renders it altogether too unreasonable, not to say unconscionable and absurd, to warrant a court of justice in presuming for a moment that the telegraph company intended to enter into such an agreement, or supposed that it had done so. It is a general rule for the interpretation of contracts, as well as for the interpretation of statutes, that they should not be so construed as to lead to injustice, oppression, or absurd consequences, if such a result can be avoided. U. S. v. Kirby, 7 Wall. 482, 486, 19 L. Ed. 278; Lau Ow Bew v. U. S., 144 U. S. 47 [12 Sup. Ct. 517, 36 L. Ed. 340]; Holy Trinity Church v. U. S., 143 U. S. 457 [12 Sup. Ct. 511, 36 L. Ed. 226]. * * * Looking at the situation and relation of the parties at the time contract B was executed, we think that it is entirely reasonable to infer that the clause declaring that the contract should continue in force for

10 years has reference to the terms upon which lines of telegraph should be constructed, maintained, and operated during that period, and that it was not intended to have any effect upon the ownership of the lines. * * * They did not intend, however, by this clause, to extinguish the telegraph company's interest in the lines of telegraph at the end of the contract period."

The court referred in that case expressly to the fact that there was no express agreement in the contract that the telegraph lines should be removed at the expiration of the term in question. The case last cited and the case at bar differ, therefore, entirely from the case of W. U. Tel. Co. v. Penn. R. R. Co., 195 U. S. 540, 25 Sup. Ct. 133, 49 L. Ed. 312, 1 Ann. Cas. 517, because in that case it was expressly provided in the contract then under consideration that at the expiration of the period named in the contract the telegraph company should remove its lines from the right of way of the railroad company. Consequently the court is of the opinion that the contract of 1896 did not have the effect contended for by the defendants.

[5] 3. The complainant in its bill prayed for alternative relief; that is, it prayed that, in the event the court should hold that it did not have an easement in the right of way of the railroad company, the court would grant it alternative relief by decreeing the amount of damages it should pay to the railroad company as compensation for the right of way occupied by it. Under the facts in this case, the court is of the opinion that, even if the telegraph company did not have a perpetual easement along the right of way of the railroad company, the court would have the right to enjoin the railroad company from removing the property of the telegraph company from its right of way and to assess the damages which the telegraph company should pay therefor. The statutes of Georgia give to complainant the power of eminent domain, and the right to condemn a right of way over the property and right of way of the railroad company, if it has not one already.

It is contended that this court has no jurisdiction over condemnation proceedings ab initio. The court is disposed to agree to this view; that is, it does not think that, if the telegraph company were not already on the right of way, this court would have a right to entertain such a proceeding in its initial steps. However, the case here is different. The telegraph company is a common carrier, and is recognized and encouraged by the laws of the state, as well as the Post Roads Act of Congress (Act July 24, 1866, c. 230, 14 Stat. 221 [Comp. St. 1913, §§ 10072–10077]) and the acts amendatory thereof. It is therefore affected with a public use. It is already on the right of way of the railroad company under a claim which it thought sufficient to allow it to remain there. It has already taken this easement, and is now in possession of same; and, such being the case, will this court allow the railroad company to eject the telegraph company from its right of way, and thus destroy its lines which are affected with a public use?

This question has been decided in principle adversely to the contentions of the defendants in the case of Atlanta, Knoxville & Northern Ry. Co. v. Barker, 105 Ga. 534–542, 31 S. E. 452, in which in a very elaborate opinion Mr. Justice Cobb held that a person could not recover

in ejectment a right of way occupied by a railroad over his land upon which the railroad had built its tracks and was operating its lines, although the plaintiff held title to the land; the decision being based upon the interest of the public involved in the continuous operation of the railroad. The same question is discussed and decided in the same way in the case of Charleston, etc., Ry. Co. v. Hughes, 105 Ga. 1, 16, 30 S. E. 972, 978, 70 Am. St. Rep. 17, where a railroad company entered upon certain property by agreement with the life tenant, and thereafter upon the death of the life tenant the remaindermen brought suit for the land. In this case the court said:

"Controversies in which a corporation charged with the duties incumbent upon carriers of passengers, freight, and mails, in which an effort is made by private individuals or others to take away from such corporation a part of the property in its possession, which is absolutely essential to its complete performance of the public duties required of it, become matters of more than private concern, and in which the public is deeply and seriously interested. For this reason it has become settled law that the harsh remedies which would be allowed to one individual against another in reference to the possession of land will not be allowed to one who is seeking to recover such property from a railroad company, when exact justice can be done to such owner by giving him remedies which are less severe in their nature, and by which he would secure substantially the same rights, thereby saving to the public the right to require a performance of the public duties incumbent upon the corporation whose property is the subject-matter of the controversy."

These decisions are quoted approvingly by the Supreme Court of the United States in several cases. The Court of Appeals of the Eighth Circuit reached the same conclusion in the case of St. Paul, etc., Co. v. W. U. Tel. Co., 118 Fed. 497, 519, 55 C. C. A. 263, cited above, in which it granted the alternative relief prayed for in this case. The Supreme Court of the United States, in the case of New York City v. Pine, 185 U. S. 93, 22 Sup. Ct. 592, 46 L. Ed. 820, citing the two Georgia cases above in 105 Ga., granted the same alternative relief to the city of New York in a very exhaustive opinion on the subject. See, also, Roberts v. Northern Pacific R. R. Co., 158 U. S. 1–30, 15 Sup. Ct. 756, 39 L. Ed. 873; Northern Pacific R. R. Co. v. Smith, 171 U. S. 260, 18 Sup. Ct. 794, 43 L. Ed. 157; Donohue v. El Paso, etc., R. R. Co., 214 U. S. 499, 29 Sup. Ct. 698, 53 L. Ed. 1060.

Counsel for defendant rely greatly upon the case of the Western Union Telegraph Co. v. Ann Arbor R. R. Co., 90 Fed. 379, 33 C. C. A. 113, in which Mr. Justice Taft, speaking for the court, held that the United States court had no right to condemn an easement for the telegraph company, where the railroad had been sold out under a mortgage placed upon the railroad before the first railroad made the contract with the telegraph company. This remark of Judge Taft, standing alone at the end of the decision, would seem to be against the position here taken; but this case went up to the Supreme Court of the United States and is to be found in 178 U. S. 243, 20 Sup. Ct. 867, 44 L. Ed. 1052. In that case the Supreme Court states that the nature of the bill was for specific performance, and held that the bill was not framed to support the alternative relief prayed for. In the case now under consideration the bill is framed specifically asking for this alternative relief. We think that this court has the power to assess the amount of

money to be paid to the railroad company for the easement in question. This is clearly pointed out by Mr. Justice Harlan in his dissenting opinion in the case of W. U. Tel. Co. v. Penn. R. R. Co., 195 U. S. pages 575 to 593, 25 Sup. Ct. 133, 49 L. Ed. 312, 1 Ann. Cas. 517, and the cases there cited by him.

4. The court is of the opinion that the Post Roads Act, which is invoked by complainant, is only entitled to consideration as showing the policy of the United States government in reference to telegraph companies, and as showing that the property in question is an instrument of interstate commerce, and that therefore, in conformity with the Barker and Hughes Cases in 105 Ga., above cited, a court of equity should grant the alternative relief prayed for in the event the telegraph company did not actually possess a right to the easement in question.

5. We do not think that the bill could be maintained alone on the ground that it was brought to prevent a multiplicity of suits; but the other allegations of the bill are sufficient to enable it to withstand the motion of defendants. We do not think that complainant has an adequate remedy at law, because it cannot set up the title claimed by it to the easement in question in a strict condemnation or other proceeding at law. Nor do we think that the bill is multifarious or duplicitous, or subject to any of the other objections urged against it by defendants.

An order will be entered, therefore, in this case, overruling the motion of defendants, and allowing the case to proceed upon its merits.

AMES v. GOLDFIELD MERGER MINES CO. et al.

(District Court, W. D. Washington, N. D. May 6, 1915.)

No. 52.

1. CORPORATIONS ⟹298, 305—DUTIES AND POWERS OF DIRECTORS—DELEGATION OF AUTHORITY.

The stockholders of a corporation have a right to expect from their directors a conscientious consideration of every proposition which is presented, and which involves any interest of the company, and such consideration must be given and action taken in formal meetings. The directors have no power to act as such individually, nor can they delegate the powers vested in them to act for the corporation to any officers or men, even though they are the majority stockholders.

[Ed. Note.—For other cases, see Corporations, Cent. Dig. §§ 1292–1317, 1319, 1329–1332; Dec. Dig. ⟹298, 305.]

2. CORPORATIONS ⟹180—MINORITY' STOCKHOLDERS—RIGHT TO EQUITABLE REMEDY.

Where the business and affairs of a corporation, instead of being managed by its directors, are taken over by the agents and officers of other concerns having the same majority stockholders, and are managed in the interests of such other corporations, and the minority stockholders are deprived of their just rights, they are entitled to a remedy in equity.

[Ed. Note.—For other cases, see Corporations, Cent. Dig. §§ 665–673; Dec. Dig. ⟹180.]

⟹For other cases see same topic & KEY-NUMBER in all Key-Numbered Digests & Indexes

3. MINES AND MINERALS ⟹104—MINING CORPORATIONS—GROUNDS FOR APPOINTMENT OF RECEIVER—MALADMINISTRATION.

The directors of a mining company met but four times in four years, and did not call a stockholders' meeting for more than three years, during which time the company expended $250,000, which was practically all of its available funds, and also sold property for $50,000 which a short time afterward was worth $500,000. All of such business was transacted without authority from the directors, by officers who were also officers or employés of other mining companies having the same majority stockholders. The work done was not calculated to, and did not, benefit the company, but did benefit the other companies. *Held*, that such facts entitled minority stockholders to the appointment of a receiver.

[Ed. Note.—For other cases, see Mines and Minerals, Cent. Dig. § 228; Dec. Dig. ⟹104.]

In Equity. Suit by Lucy V. Ames against the Goldfield Merger Mines Company, the Goldfield Deep Mines Company, J. Ross Clark, and C. A. Whittemore. On motion for continuance of receivership. Motion granted.

Bausman, Oldham & Goodale, of Seattle, Wash., for complainant.

Hoyt, Gibbons & French, of Reno, Nev., and Peters & Powell, of Seattle, Wash., for defendants.

NETERER, District Judge. A temporary receiver was appointed in this case, on bill of complaint and affidavits of the complainant, for the Goldfield Merger Mines Company, and the cause set for hearing upon application for a continuance of the receivership by the court, and a show-cause order was issued to defendants. Amended bill of complaint was filed, and the matter came on for hearing before the court upon the amended bill, the answer of the defendants, and affidavits made in behalf of the several parties, on the 14th day of April, 1915. From the admitted facts and the affidavits it appears that the Goldfield Merger Mines Company, which will be called "Merger Company," and the Goldfield Deep Mines Company, which will be called "Deep Mines Company," are corporations, each of them organized and existing under the laws of the state of Washington, with the principal place of business of each in the city of Seattle. The Merger Company was organized in the year 1908, and the Deep Mines Company in 1911, and complainant is now and has been a shareholder of record on the books of the Merger Company since 1911. The principal object of the Merger Company is the business of mining, and it is now possessed of divers gold claims, said to be valuable, at Goldfield, in Esmeralda county, Nev. The authorized capital stock of the company is $5,000,000, divided into that number of shares. In July, 1911, all of the shares, except 1,148,677, had been issued to various parties throughout the United States. This number remained in the treasury of the company. The company had been engaged in the exploration of its several claims prior to this date, and was solvent, and was desirous of securing further sums for further exploration. Ores had been found in the various claims of the company, of value, and of such a character as to make further explorations and development desirable. Adjoining the claims of the Merger Company were mines of the Goldfield Consolidated Mining Company, a corpora-

tion organized in 1911, and which had for some time been engaged in mining on a large scale, with profit. The properties of the Goldfield Consolidated Mining Company, and other companies that were controlled by the parties who controlled and managed this company, border on three sides of the property of the Merger Company. The other companies were known as the Atlanta Mines Company, the Kewanas Mining Company, and the Booth Mining Company. George Wingfield was in control of the Goldfield Consolidated Mining Company, and also the other companies named. A railroad, known as the "Salt Lake Route," running from Salt Lake to Los Angeles, has a branch line running to this mining district, known as the Las Vegas & Tonopah Railroad. This is owned, or managed, at least, by W. A. Clark, well known to the mining world.

The board of directors of the Merger Company and the majority stockholders were desirous of developing the Merger Company as an independent concern, and not to become absorbed by the Goldfield Consolidated Company, and Mr. Wingfield and those in charge and control of the Consolidated and allied corporations were desirous of obtaining control of the Merger Company. In July, 1911, O. C. Whittemore, at the suggestion of Wingfield and others operating with him, in behalf of the Consolidated Company, came to Seattle, and either by direct statements or by suggestions or conduct, led the majority stockholders to believe that he was representing W. A. Clark, of Montana, the mining man, and through such understanding purchased a control in the Merger Company, and led the majority stockholders of the Merger Company to believe that it was the desire of W. A. Clark that he be not known in the transaction, but that the stock be carried in the name of J. Ross Clark, his brother. The control of the Merger was thereupon sold to Whittemore for $300,000. $250,000 of this money was to be put into the treasury of the company for development purposes, and $50,000 paid to some of the shareholders for stock owned by them to make up the control. It was agreed that a new company should be formed, called the Goldfield Deep Mines Company, with a capital of $10,000,000, divided into 10,000,000 shares. The majority shareholders made the exchange by turning their shares to Whittemore and his associates and taking the Deep Mines shares, and this was done to a sufficient extent to pass the control of the Merger Company to the Deep Mines Company. Whittemore and J. Ross Clark obtained in this way a majority and voting control of the Merger Company and also of the Deep Mines Company, and have ever since so held it. The board of directors selected for each company was J. Ross Clark, O. C. Whittemore, C. E. Redman, John Erikson, and Claude M. Smith. Whittemore was elected president of the Merger Company and vice president of the Deep Mines Company, and J. Ross Clark was elected president of the Deep Mines Company, which offices these men have since held. C. E. Redman is a local employé of the Las Vegas & Tonopah Railroad and subordinate official therein. Whittemore is attorney for this railroad company, and J. Ross Clark also has some official connection with this road. Erikson and Smith were directors of the Merger Company before the Deep Mines organization, and are representatives of the minority in each com-

pany. The Deep Mines Company is simply a holding corporation, and has no other purpose, and seems to perform no other function, than holding the stock interests of the Merger Company. Complainant did not exchange shares with the Deep Mines issue and holds none of that stock.

Wingfield is president of the Atlanta Mines Company and for some years was president of the Consolidated Company, and also president of the Kewanas Mining Company, and is in control of the Booth Mining Company, and a man of great influence in the mining district of Goldfield. After the organization of the board in these companies, and in September, 1911, L. H. Metzgar was appointed general manager of the Merger Company, and served until April, 1913. Prior to his appointment to this position, he was with the Consolidated Company, and upon retiring from the Merger Company he immediately resumed the position of one of the superintendents of the Consolidated Company, and is now superintendent of a company controlled by the Consolidated Company. In April, 1913, John Mocene was appointed manager of the Merger Company, and also retained the position of overhead or top superintendent of the Consolidated Company, and in this double employment remained until August, 1913, when he was succeeded by K. M. Simpson, who was in the employ of Wingfield as field engineer, he acting in this dual capacity while with this company, and when he left the Merger Company he became assistant manager of the Consolidated Mining Company. Simpson was succeeded in the spring of 1914 by A. I. D'Arcy, who is the present manager of the Merger Company, and was a field or exploring engineer for Wingfield, and is now consulting engineer for Wingfield. Claude M. Smith was the Merger Company's secretary before the Deep Mines and Consolidated control, and remained until June, 1912. He was never connected with the Consolidated Company or Wingfield Company, and was disinterested, and is now a trustee. He was requested to resign as secretary. H. H. Hudson was selected as secretary of the company, a former employé in the bank of John S. Cooke & Co. of Goldfield, which is controlled by Wingfield, and during a portion of the time served the bank as well as the company. In September, 1914, Hudson was succeeded by J. C. Walther, who is simultaneously acting as assistant manager of the bank named. F. C. Favier, the assistant secretary of the Consolidated Company and of all the Wingfield properties in Southern Nevada, is in the joint relation of acting for the Merger Company and the Wingfield properties now. All the books of the Merger Company, after the Wingfield and Clark control, have been kept at Goldfield, Nev., in the office and safe of the Consolidated Mining Company. The Merger Company's attorneys in Nevada are attorneys for Wingfield, for the Consolidated Company, for the Atlanta Mines Company, and for the Booth Mining Company.

In the employment of experts in or about the property of the Merger Company, those in the employ of the Consolidated Company and the Wingfield interests were employed. No report was obtained from any other source. After the receipt of the $250,000 by the Merger Company, the manager of the company began sinking a three-compartment shaft on the St. Ives claim of the Merger Company. A

shaft at this point had been sunk 350 feet several years prior, but had been abandoned as not desirable. When work was resumed the shaft was enlarged to a three-compartment shaft. The slope of the veins in this district is downward from west to east, and as the "extralateral pursuit" gives a privilege to the Consolidated Company and Atlanta Company, and the right to pursue beyond their side lines any veins having their apex within the boundaries of either, development of the Merger Company's claim might result in favor of the Consolidated Company and Atlanta Company. At the time of the sinking of this shaft there was nothing that would indicate that a development or discovery might be made. The location of these several claims and mining interests, the mining companies' properties, and the Goldfield Merger Mines Company, is set forth in the following map:

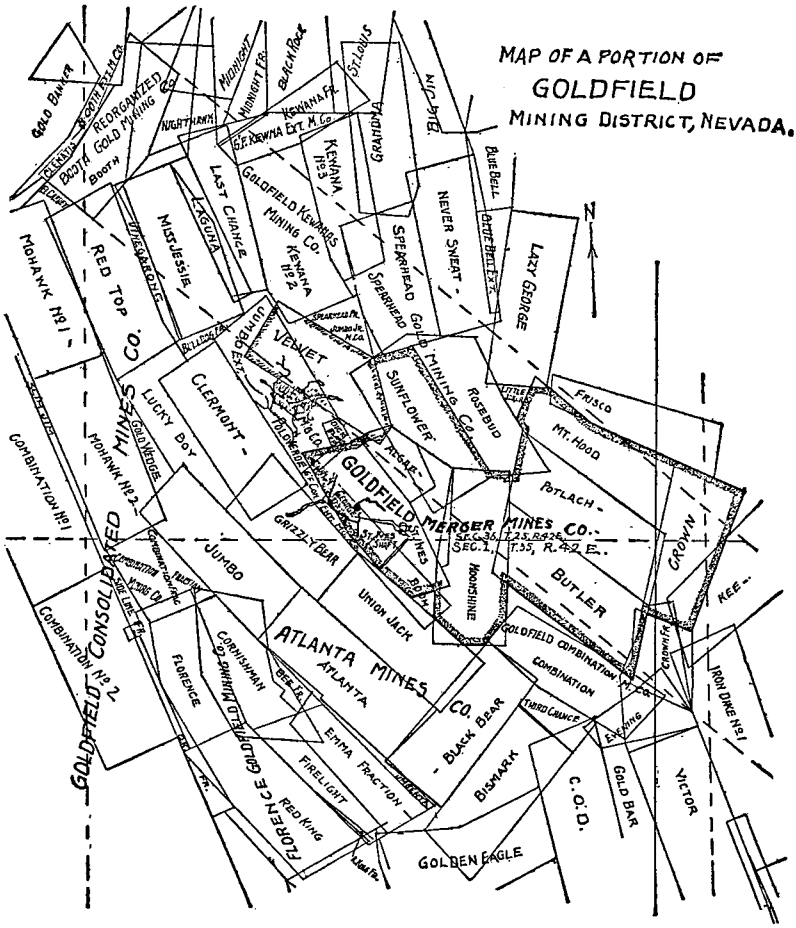

No ore had been found in or through this shaft, nor did the new work develop any paying vein. At a depth of 1,300 feet a cross-cut was run from this shaft to the Grizzly Bear in connection with the workings of the Consolidated Company, and then the shaft was further sunk to a depth of 1,752 feet, and a tunnel was run from this shaft to the Atlanta Mines Company boundary. The following map shows a cross-section of this shaft and tunnel to the Atlanta Mines:

SKETCH
NORTH-SOUTH SECTION THROUGH
ST. IVES SHAFT

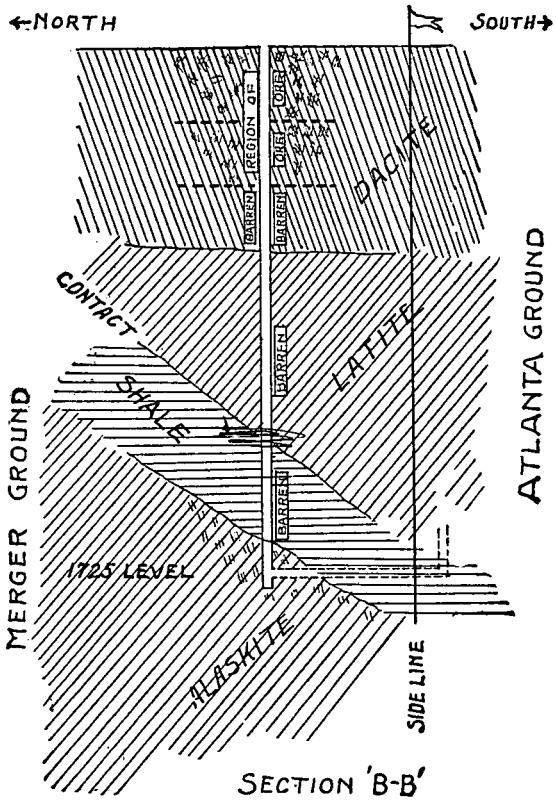

SECTION 'B-B'

And the following map shows the various tunnels running from the shaft of the St. Ives to the Grizzley Bear claim and to the Atlanta Mines, and also the tunnels that were extended from the shaft of the Jumbo Extension claim, to which reference will be made:

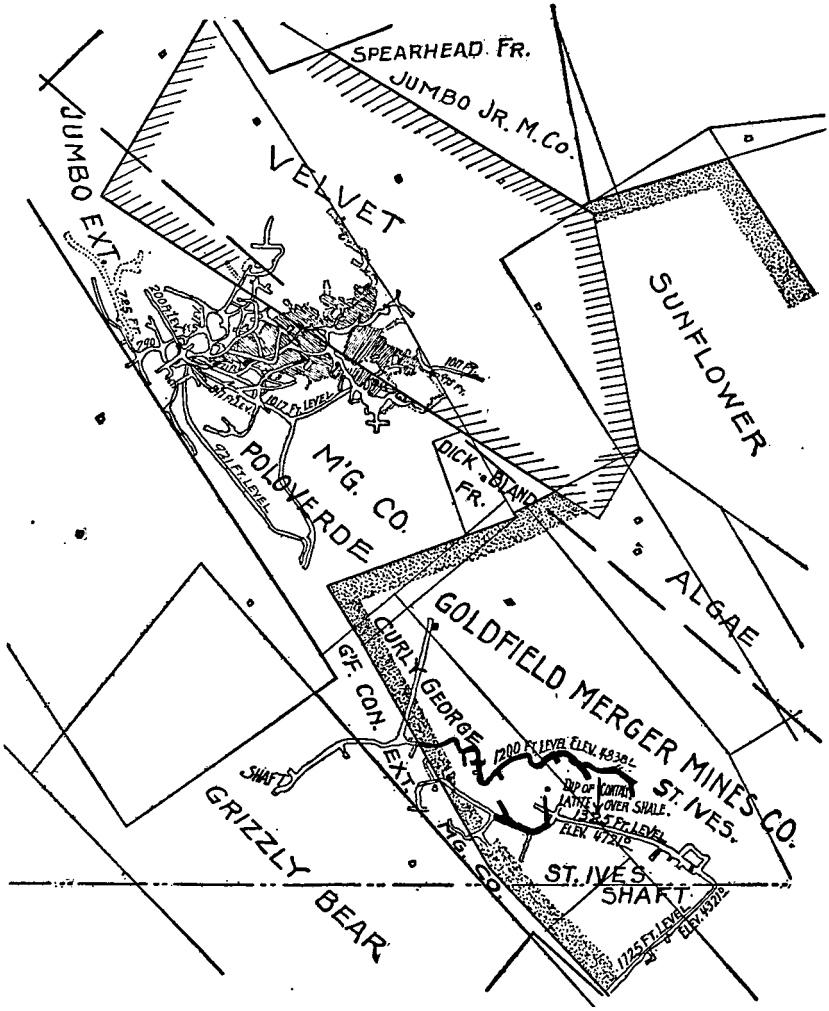

At no stage of this work did the Merger Company obtain a waiver of apex rights, either from the Atlanta Mines Company or the Consolidated Company. No action was taken at any time by the directors for the Merger Company, and no record is made of any arrangement with the Atlanta Mines Company, or any company, with respect to the use of this shaft or the tunnel, or for sharing of expense, but the Atlanta Company did pay $35,000. There was expended by the Merger Company for installing pumps and machinery at the shaft on the St. Ives claim nearly $13,000, at a time when the sole beneficiary seemed to be the Atlanta Company. The Merger Company's manager, who had charge of this work, is also the manager of the

Atlanta Company, and no memoranda of any sort existed between the two companies with relation to the use of this shaft, or the expenditures of the moneys, or any rentals or royalties to be paid on the part of the Atlanta Company, or any contributions to be made, or anything with relation to ownership, use, interest, or expenses. Subsequently to the appointment of the temporary receiver, the Atlanta Company agreed to pay something like $33,000 towards this expenditure. The Velvet claim was sold by the Merger Company, upon the advice and suggestion of Mr. Wingfield, to the Jumbo Extension Company, after the Jumbo Extension claim had been practically worked out, and was sold for the consideration of $80,000, of which $10,000 was cash, and the balance in installments, and 171,000 shares of stock in the Jumbo Extension Company. This stock was placed in the name of M. E. Hill, trustee, instead of in the treasury of the Merger Company. Hill was cashier of the John S. Cooke & Co. Bank, owned by Wingfield. Shortly after the sale of the Velvet claim, rich ores were struck, and the stock of the Jumbo Extension Company went from considerably less than $1 a share to $3 or $4 a share. Out of the 171,000 shares of Jumbo Extension stock, 21,000 were paid for commissions to Van Dyke, who paid 10,000 of this to Mr. Whittemore, the president of the Merger Company. The 150,000 was afterwards sold by Mr. Howe without any authorization or direction from the board of trustees. This is what Mr. Howe says:

"I am, and have been for more than six years last past, the secretary and president of the Goldfield Consolidated Mines Company, and many other corporations in which Mr. George Wingfield is largely interested. * * * At least 10 corporations in which Mr. Wingfield is largely interested are active companies, prosecuting work and carrying on business, and I have found it to be of very great advantage to these companies to have many matters * * * performed by persons jointly employed by two or three, and in some cases all, of said companies. * * * The friendly co-operation which has characterized the operation of these companies has been beneficial to all parties concerned, and has been a distinct aid to the development of their properties. * * * In my capacity of secretary and president of practically all of the companies in which Mr. Wingfield is interested, and also in my capacity as agent for such companies, and for Mr. Wingfield personally, it has been peculiarly my duty at all times to attend to matters in which he is directly or indirectly interested. The Goldfield Consolidated Mines Company, through the instrumentality of the Deep Mines Company, was and is more largely interested than any one else in the welfare of the Merger Company. That company's officers, and particularly the board of trustees, live at distant points, with one or two exceptions, so that it is seldom possible to hold board meetings with any regularity. For this reason the custom has long obtained, with reference to the conduct of the Merger Company's business, for its general manager and assistant, including myself, to look after the company's interests, and at all times some things need to be done quickly, awaiting subsequent ratification of the board of trustees. When the Merger Company received the 150,000 shares of Jumbo Extension stock as part payment for the sale of the Velvet claim, this stock was for convenience placed in the name of M. E. Hill, trustee, with the idea that it should be sold when market conditions seemed to justify. On or about September 27, 1914, under the advice of the Merger Company's general manager, and with the further advice of Albert Burch, general manager of the Goldfield Mines Company, and with the knowledge of Trustee Hill, and believing that the market conditions were favorable, * * * I caused a part of the shares to be sold. * * *"

At the time this stock was sold the Merger Company was in need of no funds, except for expenditures in the St. Ives shaft, and no need for money would have been occasioned, had the Atlanta Company, in whose interest the shaft appears to have been run, paid to the Merger Company what it is now claimed it has agreed to pay since this receivership. I have referred to this sale, not for the purpose of showing that the parties connected with the sale did not act in good faith, nor exercise their best judgment, but to show that it was not the result of the judgment of the trustees, and that the business of the Merger Company, instead of being conducted by the board of trustees, who had been regularly elected and who are responsible to the stockholders, was done by persons other than the trustees, and who are in the employ of other concerns, whose interests may not be, and is charged are not, in harmony with the best interests of the Merger Company, and concerns in whose interest the money received was expended. Trustee Redman says:

> Meetings of the trustees were seldom had, which "led to the transaction of business in an informal manner; the practice often being to permit persons of good character, whose honesty was thoroughly well known, to act on behalf of the company without express prior authorization, and thereafter look to the confirmation of their acts by subsequent ratification or acquiescence and tacit ratification. * * *"

The Merger Mines Company expended in the shaft and tunnels of the St. Ives claim approximately $199,000. It expended other sums in and about and upon the properties of the Merger Company. These expenditures were directed, not by the board of trustees, but under the direction of the officers of other companies, whose interests, it is alleged, were out of harmony with the best interests of the Merger Company, and which companies, as disclosed by the record, did profit by such expenditure, while the Merger Company did not.

At a meeting of the board of trustees, on the 15th of March, 1915, Trustee Erikson offered the following resolution, and moved its adoption, among others:

> "Resolved, that this company, in its own name or in that of the receiver, demand an accounting between this company and the Atlanta Mines Company, and an immediate payment of all sums by the latter company, due to this company, and including rent for the use of 1,300 feet of this company's three-compartment St. Ives shaft, for all times heretofore used by the Atlanta Mines Company down to the present time"

—which was defeated; Trustees Clark, Redman, and Whittemore voting against the resolution, and Trustees Erikson and Smith for it. Thereupon the following resolution was offered:

> "Resolved, that this company, so soon as it is freed from the receivership, forbid the use of the three-compartment shaft of the St. Ives claim by the Atlanta Mines Company, or other companies, unless such company, or companies, in addition to paying the operating expenses, pay a reasonable rental for the future use of the shaft, inclusive of depreciation charges upon pumping or other machinery belonging to this company."

Upon vote, the resolution was defeated; Trustees Clark, Redman, and Whittemore voting against it, and Trustees Erikson and Smith for it.

The reorganized Booth Gold Mining Company has commenced an "apex suit" against the Jumbo Gold Mining Company and the Merger Mines Company on account of ores discovered and taken out of Velvet. The attorneys for the Booth Mining Company are likewise attorneys for the Merger Company. The board of trustees of the Merger Company have been requested to engage counsel in that action, and have declined to do so. It was stated in open court by nonresident counsel for defendants, who are also counsel for the Booth Company, that they would not enter a default in that case against the Merger Company until the minority stockholders shall have a right to appear and contest any rights therein at their own expense. Service was made upon the resident agent of the defendant Merger Company in Nevada in that suit. Some question as to the regularity of the appointment of this agent had been suggested, and the board of trustees, after the service upon this agent, at a meeting, ratified the appointment of this agent, and confirmed, on behalf of the company, service of process upon the agent prior to that time. Upon the hearing it was admitted in open court that one of the trustees of the Merger Company had in fact dictated the resolution legalizing this service.

At the bar it was stated that the Merger Company had no interest in the "apex suit" of the Booth Mining Company, and that counsel for the company had so advised; but why counsel should advise the Merger Company that it had no interest in the suit, and at the same time advise the Booth Company that it has, and that it was a necessary party to the litigation, and make it a party, is not clear, and a board of trustees looking out for the best interests of the Merger Company would not, under such circumstances, rest secure and not consult other counsel. It is said that:

> "This whole case resolves itself, in its ultimate analysis, to this question: Have or have not the directors acted fraudulently? Have or have not Wingfield and the Consolidated Mines Company acted fraudulently? Have they acted dishonestly? Have they sacrificed the Merger?"

[1] The issue is: Have the directors of this company abandoned the company? Have they turned the management of its business over to others, and is the business of the Merger Company now being administered by the officers or employés of other companies, whose business is or may develop antagonistic to the best interests of the Merger Company? The stockholders of a corporation have a right to expect from their directors a conscientious consideration of every proposition which is presented which involves any interest of the company, in conformity to the oath which they have subscribed. They have a right to have the individual viewpoint of the several directors expressed at a conference, for the purpose of obtaining the exchange view of the several persons in arriving at conclusions after deliberate consideration of any issue. It is fundamental that officers of boards can only act as such constituted boards when assembled as such, and by deliberate and concerted action dispose of the issue under consideration, and that they cannot act in an individual capacity outside of a formal meeting, and a majority of the individual expressions be the action of the board. The law believes that the greatest wisdom results from con-

ference and exchange of individual views, and it is for that reason that the law requires the united wisdom of a majority of the several members of the board in determining the business of a corporation, and will not permit the business and concerns of a corporation to be delegated to any officers or men, however capable, or however high their standard for integrity and honesty may be, and that fraud will be implied upon the delegation of such power and right, and the exercise thereof by men who may be the controlling stockholders, even though, in their own conscience, they may believe that everything has been done to the very best interests of the concern; and this is emphasized when the records show that large sums of money have been expended with no beneficial results to the concern, but which do show great benefits to other concerns in which these majority stockholders likewise own large interests, as in this case. It is the abuse of corporate license or power which reflects upon corporate control and casts suspicion upon large corporate holdings. It is the failure to give that consideration to the interests of the minority which the majority would have them give were the positions reversed. The law, therefore, wisely places control of corporations in a board of trustees, and requires its action as a board.

[2] Counsel for defendants say that complainant has another remedy, and that a court will not take the control of the corporation from the board of trustees while other remedies are available; that the parties against whom complaint is made are solvent, and that the minority stockholders can bring an action on behalf of the corporation, however at their own expense; that the majority stockholder has a right to dictate the policy and business affairs of the corporation, irrespective of the desire of the minority, so long as no fraudulent, dishonest, or oppressive conduct is shown; and that the conduct shown in this case is sanctioned and approved. It is said that many men are directors in many different corporations which have contractual relations, and that a court will only see whether the dealings, contracts, etc., are fair, whether the boards have acted impartially; and by that criterion shall the court conclude this issue.

[3] From the record it appears that the directors of the defendant company held four meetings in nearly as many years. The officers made no report to the stockholders. No meeting of the stockholders was called for more than three years. More than $250,000 was expended, practically all of the available funds, during this period of time. This expenditure was directed by officers of other companies controlled by the majority stockholders of the Merger Company, and not by the trustees of the defendant company. $199,000 was spent on a shaft and tunnels which developed nothing for the Merger Company, but did for other companies. No contract was entered into by the board of directors with the other companies for any contribution or sharing of expenses. Stock owned by the defendant company was sold for less than $50,000 by officers of other companies, and not by the board of directors, which within a short time was worth $500,000. The officers who sold the stock were officers of the company for whose benefit the shaft was operated, to pay the expenses of which the stock is claimed to have been sold. The entire record in this case is redolent

with facts showing that the business of the Merger Company was not and is not conducted by the trustees. The fact that the trustees were nominal stockholders is not material. A man need not be a large shareholder to be a trustee, but he must exercise his integrity and his judgment in behalf of the corporation which he represents; nor can he be held responsible for error in judgment, but he cannot be permitted to turn his trust over to others to exercise for him, even though the administration by others of the trust may, in the judgment of such other persons, be honestly carried out.

Under the circumstances disclosed in this case, I do not think that there is an adequate remedy at law. Where the business and affairs of a mining corporation are taken over by the agents and officers of other concerns whose controlling shareholders also control such mining corporation, and the business of such mining corporation is managed in the interest of such other concerns, and the minority stockholders deprived of their just rights, I think there is a liability in equity, and that there is no more valuable function that a court of equity can, under such circumstances, perform, than to protect such minority, and that a court of equity is the only tribune to afford an effective remedy.

From all of the testimony that was presented, the admitted facts, and the indisputable proof upon the issue, it is conclusively established, to my mind, that the Merger Company's identity is practically lost; that its affairs are not and have not been administered by its board of directors, and that the corporate life, except as mere form, has been abandoned, and the administration of its affairs turned over to the executive and administrative officers of the Goldfield Consolidated Mines Company and allied concerns; that the policy of all of the business of the Merger Company has been planned and carried out by the officers and persons who dictated and directed the policy and business of the Goldfield Consolidated Company and allied concerns, and not by the trustees of the Merger Company, and the interest of the Merger Company has not been subserved in the manner it should have been, but that the Merger Company's affairs have been and are being administered in the interest and in behalf of the Goldfield Consolidated Mines Company and allied companies. And it seems to me that the board of trustees of the Merger Company, in this case, is the Goldfield Consolidated Mining Company and allied concerns, and these interests are seeking shelter behind the board of trustees of the Merger Company, and invoking the official relation of a majority of the trustees of this company for their protection in exploiting their own properties at the expense of the Merger Company. Said Lord Mansfield in Johnson v. Smith, 2 Burr. 962:

> "The court would not endure that a mere form or fiction of law, introduced for the sake of justice, should work a wrong contrary to the real truth and substance of the thing" (quoted by Circuit Judge Gilbert in Linn & Lane v. U. S., and U. S. v. Smith, 196 Fed. 593, at page 598, 116 C. C. A. 267, at page 273).

In Earle et al. v. Seattle, Lake Shore & Eastern Ry. Co. et al. (C. C.) 56 Fed. 909, at page 910, the court said:

"Manifestly, the purpose of the Northern Pacific Railroad Company, in acquiring a controlling majority of said stock, was to absorb the property, business, and franchise of the Seattle, Lake Shore & Eastern Company. The general manager of the Northern Pacific Railroad Company is now the general manager of the Seattle, Lake Shore & Eastern Company, and a change in the by-laws of the latter company has been made, conferring upon its general manager absolute control of the operation of said railway lines. The five trustees of the Seattle, Lake Shore & Eastern Company are all without individual interest in the company—mere nominal stockholders and representatives of the Northern Pacific Railroad Company, four of them being officers and agents of said company. * * * A traffic contract has been entered into between the two corporations, which, in effect, deprives the Seattle, Lake Shore & Eastern Company of all independence, and reduces it to the position of a dependent and feeder of the Northern Pacific Railroad Company."

The facts in the instant case present many parallels to this case. The application for a receiver is granted.

SIMPSON v. WESTERN HARDWARE & METAL CO.

In re TACOMA ORNAMENTAL IRON WORKS.

(District Court, W. D. Washington, N. D. October 7, 1915.)

No. 73-E.

1. BANKRUPTCY ⚷292, 293—SUITS BY TRUSTEE—JURISDICTION.

An action by a trustee to recover property alleged to have been transferred by the bankrupt within four months and when insolvent to defendant, which was a general creditor, to give defendant a preference, and to hinder, delay, and defraud other creditors, is within the terms of Bankr. Act July 1, 1898, c. 541, § 67e, 30 Stat. 564, as amended by Act Feb. 5, 1903, c. 487, § 16, 32 Stat. 800 (Comp. St. 1913, § 9651), and therefore one of which the bankruptcy court is thereby given jurisdiction, although plaintiff admits that he does not know the nature or value of the property and demands a discovery from defendant.

[Ed. Note.—For other cases, see Bankruptcy, Cent. Dig. §§ 410, 411, 413, 415–417; Dec. Dig. ⚷292, 293.]

2. BANKRUPTCY ⚷293—SUITS BY TRUSTEE—JURISDICTION.

A suit by a trustee, alleging that defendant claims to be the owner of an account due from a debtor to the bankrupt, that such claim is fraudulent and the result of a conspiracy to defraud the bankrupt's creditors, and praying that defendant's claim be decreed invalid, is one in the nature of a suit to quiet title to personal property, and not to recover property, and is not within the jurisdiction of a federal court, unless with defendant's consent, where it could not have been brought in that court by the bankrupt.

[Ed. Note.—For other cases, see Bankruptcy, Cent. Dig. §§ 411, 417; Dec. Dig. ⚷293.]

3. BANKRUPTCY ⚷287—SUITS BY TRUSTEE—EQUITY JURISDICTION.

A suit by a trustee to recover a voidable preference under Bankr. Act July 1, 1898, c. 541, § 60b, 30 Stat. 562, as amended by Act June 25, 1910, c. 412, § 11, 36 Stat. 842 (Comp. St. 1913, § 9644), where no preliminary relief is necessary to a recovery, is not cognizable in equity, the remedy at law being plain, adequate, and complete; but a suit under section 67e, to recover property fraudulently transferred, involves actual fraud, and is within the equity jurisdiction.

[Ed. Note.—For other cases, see Bankruptcy, Cent. Dig. §§ 444–447; Dec. Dig. ⚷287.]

In Equity. Suit by R. D. Simpson, trustee in bankruptcy of the Tacoma Ornamental Iron Works, against the Western Hardware & Metal Company. On motion to strike and transfer. Sustained in part.

W. W. Keyes, of Tacoma Wash., for plaintiff.
F. C. Kapp, of Seattle, Wash., for defendant.

NETERER, District Judge. This action was brought in the Southern division, and upon motion transferred to this division. Plaintiff, trustee of Tacoma Ornamental Iron Works, a corporation, bankrupt, by complaint in the form of a bill in equity, seeks judgment and equitable relief against the defendant, Western Hardware & Metal Company. Both the bankrupt and the defendant are Washington corporations; the former with its principal place of business in Tacoma, and the latter in Seattle. The complaint contains three causes of action. In the first, plaintiff alleges:

"That on the 7th day of November, 1914, and prior thereto, the said Tacoma Ornamental Iron Works was insolvent, of which insolvent condition the said defendant had full knowledge, and upon said date, with the intent to create a preference, the said defendant, through its officers and agents, did enter into a conspiracy with the said Tacoma Ornamental Iron Works, through its officers and agents, by which the said defendant was paid the sum of five hundred twenty-one and $^{23}/_{100}$ dollars ($521.23); that said payment of said sum of money above referred to was made with the intent and did create a preference in favor of the said defendant, who was at that time a general creditor of the said Tacoma Ornamental Iron Works. * * *"

The second cause charges:

"That on or about the 6th day of November, 1914, and prior thereto, the said Tacoma Ornamental Iron Works was insolvent, of which insolvent condition the said defendant had full knowledge, and upon said date the said defendant was a general creditor of the said Tacoma Ornamental Iron Works, and for purposes of hindering, delaying, and defrauding other creditors, and with the intent to create a preference, the said officers and agents of the said defendant and the said Tacoma Ornamental Iron Works did enter into a conspiracy by which certain assets, consisting of goods, wares, and merchandise, were turned over to the said defendant at the said time, but upon information and belief alleges the value thereof to be nine hundred ($900.00) dollars, and further alleges that the said defendant should be compelled to forthwith furnish to the said plaintiff a list of said goods, wares, and merchandise so removed and turned over to it."

Under the third cause it is alleged:

"That on or about the 7th day of November, 1914, the King Lumber Company, a corporation, then engaged in business in the state of Washington, was indebted to the Tacoma Ornamental Iron Works; that the said defendant has notified the said King Lumber Company that it, the said defendant, claims that it, the said defendant, owns the debt due from the said King Lumber Company to the said Tacoma Ornamental Iron Works; that by reason of the said claim so made the said King Lumber Company has refused to pay to the plaintiff herein the amount due from the said King Lumber Company to the Tacoma Ornamental Iron Works and its trustee; that the said alleged claim is fraudulent and void, and if any evidence thereof was given by the officers or agents of the said Tacoma Ornamental Iron Works to the officers or agents of the defendant, the same was done as a result of a conspiracy between the said officers to hinder, delay, and defraud the creditors of the said Tacoma Ornamental Iron Works, and to prefer the said defendant to the

other creditors of the said Tacoma Ornamental Iron Works while the said Tacoma Ornamental Iron Works was insolvent, of which the said defendant had full knowledge."

Plaintiff prays for judgment under the first cause of action for the amount of the alleged preference; under the second cause prays "that said defendant be required forthwith to surrender said property so removed, giving a full and detailed statement of the items, and that in lieu thereof that said plaintiff do have and recover judgment against the said defendant in the sum of $900, with interest thereon from the 6th day of November, 1914, until paid"; and under the third cause prays "that said alleged claim of the said defendant to the money due plaintiff herein by the said King Lumber Company be canceled and held for naught, and that said plaintiff be allowed his legal costs and disbursements herein, and such other and further relief as may be equitable."

Defendant has moved to transfer the first cause of action to the law side of the court, "for the reason that the same is not cognizable in equity," and has moved to strike the second and third causes, because redundant and impertinent, and this court has no jurisdiction of the subject-matter therein set forth. In the event of a denial of the motion to strike as to either of these causes of action, defendant moves that they be transferred to the law side of the court, because not cognizable in equity.

As to the jurisdictional question, it can be said that this is not a proceeding in bankruptcy; nor is there diversity of citizenship and requisite amount involved to give this court jurisdiction. If jurisdiction obtains, it must be by virtue of the provisions of section 23 of the Bankruptcy Act and amendments thereto (Comp. St. 1913, § 9607), which provides that (paragraph "a"):

"The United States Circuit (now District) Courts shall have jurisdiction of all controversies at law and in equity as distinguished from proceedings in bankruptcy, between trustees as such and adverse claimants concerning the property acquired or claimed by the trustees, in the same manner and to the same extent only as though bankruptcy proceedings had not been instituted and such controversies had been between the bankrupts and such adverse claimants."

Subdivision "b" of section 23, Bankr. Act 1898, prior to amendment, provided that:

"Suits by the trustee shall only be brought or prosecuted in the courts where the bankrupt, whose estate is being administered by such trustee, might have brought or prosecuted them if proceedings in bankruptcy had not been instituted, unless by consent of the proposed defendant."

The Supreme Court, in Bardes v. Hawarden Bank, 178 U. S. 524, 20 Sup. Ct. 1000, 44 L. Ed. 1175, in construing section 23, supra, held that under the limitations imposed by subdivision "b," controversies not strictly or properly part of the proceedings in bankruptcy, but independent suits brought by the trustee in bankruptcy to assert a title to money or property as assets of the bankruptcy against strangers to those proceedings, do not come within the jurisdiction of the United States District Courts, unless by consent of the proposed defend-

ant. Subdivision "b," supra, was thereafter amended, by the acts of 1903 and 1910, to add the following:

"Except suits for the recovery of property under section sixty, subdivision b, and section sixty-seven, subdivision e, and section seventy, subdivision e."

It is apparent that the several causes of action in the complaint in this case, if they are within the jurisdiction of this court as to the subject-matter therein contained, must be brought within one of the classes specified in the amendment of subdivision "b," supra. The jurisdiction as to the first cause of action is not disputed, and of course obtains under section 60, subdivision "b."

[1] Defendant contends that the second cause of action is one for an accounting, and therefore not within the exception. This cause of action is clearly one charging the transfer, for the purpose of hindering, delaying, and defrauding other creditors, of bankrupt's property to the defendant, and within the provisions of section 67e of the act. That is the gist of this cause of action. The fact that the trustee did not know the exact nature or value of the property charged to have been transferred and asks that the defendant be required to furnish a list, does not change the general character of the suit.

[2] The third cause of action, however, cannot be brought within the exception. It is in the nature of a suit to quiet title to personal property, and while such a suit is cognizable in equity, where the requisites of jurisdiction are shown (section 57, Judicial Code [Comp. St. 1913, § 1039]; Burpee v. Guggenheim, 226 Fed. 214, filed in this court, August 11, 1915), the bankrupt could not have brought it in the federal court, and the trustee cannot bring it against the objection of the defendant (Bardes v. Hawarden Bank, supra).

[3] Are the first and second causes of action cognizable in equity, or should they be transferred to the law side of this court? It does not appear that this question has ever been passed upon by the Supreme Court, and the District and Circuit Courts are not in harmony.

In Wall v. Cox, 101 Fed. 404, at page 412, 41 C. C. A. 408, at page 417, the Circuit Court of Appeals for the Fourth Circuit held that a trustee in bankruptcy, seeking to set aside a bill of sale and transfer of property previously made by bankrupt and alleged to have been fraudulent under the bankruptcy law, may proceed by bill in equity, and through District Judge Waddill said:

"The petitioners earnestly insist that, if the United States District Court has jurisdiction to entertain a suit of the character under consideration, the action should be by appropriate proceedings at law, and not by bill in equity. That courts of equity are clothed with full power and authority to entertain suits involving questions of fraud in the conveyance and transfer of property, and the annulling and cancellation of such transfers, is too well and firmly settled and established in the jurisprudence of the country to admit of serious question at this late day. 'It is not enough that there is a remedy at law; it must be plainly adequate, or, in other words, as practical and efficient to the ends of justice, and its prompt administration, as the remedy in equity.' Boyce v. Grundy, 3 Pet. 213, 7 L. Ed. 655. In Clements v. Moore, 6 Wall. 299, 18 L. Ed. 786, the same being a creditors' bill in the District Court to set aside a fraudulent transfer of a stock of goods, the court said that equity is the appropriate remedy, being more flexible and tolerant, and capable of administering justice to fit the particular case, than could be done un-

der the rules of law. 'It is objected that a court of equity has no jurisdiction of the case, because the law affords a complete remedy in damages. This objection is groundless. Equity has always had jurisdiction of fraud, misrepresentation, and concealment; and it does not depend on discovery.' Jones v. Bolles, 9 Wall. 364, 369, 19 L. Ed. 734. 'Jurisdiction in equity attaches unless the legal remedy, both in respect to the final relief and the mode of obtaining it, is as efficient as the remedy which equity would confer under the same circumstances.' Mr. Chief Justice Fuller, in Kilbourn v. Sunderland, 130 U. S. 505, 515, 9 Sup. Ct. 594, 32 L. Ed. 1005."

The Supreme Court, in 181 U. S. 244, 21 Sup. Ct. 642, 45 L. Ed. 845, upon certified questions, passed upon the question of jurisdiction adversely to the decision of the Circuit Court, dismissing the bill, but the right to proceed in equity was not decided.

The District Court for the Southern District of New York, in Pond v. New York National Exchange Bank, 124 Fed. 992, in considering an action by a bankrupt's trusteee to recover an alleged preference, held the suit analogous to a suit by a judgment creditor to set aside a fraudulent conveyance, and that it could be maintained in equity. Judge Holt, at page 993, said:

"This suit is analogous to a judgment creditor's suit to set aside a fraudulent conveyance. The original payment, when made, was valid. It would not have been voidable by the bankrupt. It has only become voidable at the election of the trustee in bankruptcy, in the same manner as a fraudulent conveyance may be set aside by a judgment creditor. The jurisdiction in such cases has always been in equity."

The Circuit Court of Appeals, Seventh Circuit, in Off v. Hakes, 142 Fed. 364, at page 366, 73 C. C. A. 464, at page 466, held that courts of bankruptcy have equitable jurisidiction of suits to set aside alleged fraudulent preferences under section 60b of the Bankruptcy Act, conferring on such courts jurisdiction to recover preferences concurrent with that of state courts. Judge Seaman, for the court, said:

"The contention 'that the action was wrongly conceived,' and that the remedy was at law and not in equity, is overruled. It was neither raised seasonably in the trial court, nor is it deemed tenable in our view of the only remedy enforceable under the allegations and evidence. Jurisdiction for recovery of preferences, concurrent with that of state courts, is expressly conferred upon the bankruptcy court by section 60b, as amended, and its equitable jurisdiction to that end is well recognized. Loveland's Law and Proceedings in Bankruptcy (2d Ed.) 82; Collier on Bankruptcy (3d Ed.) par. 37."

The District Court, Western District of New York, in Parker v. Black, 143 Fed. 560, entertained a suit in equity for an accounting, brought by the trustee in bankruptcy against certain creditors of bankrupt, which alleged the transfer by bankrupt of certain moneys, while insolvent, in violation of section 60b of the act. Hazel, Judge, said:

"That the trustee acted within his right in instituting a plenary action for an accounting, instead of restoring to an action at law, seems to be settled by the federal authorities. * * * It will be noted that the language employed in the same sentence includes suits to set aside fraudulent conveyances and suits for the recovery of money paid by the bankrupt to third persons. This would seem to indicate that the Supreme Court regarded the payment of money to a creditor or third person in violation of the bankruptcy act as in the nature of a fraud, misrepresentation, or concealment, and that a remedy in equity would more readily afford adequate relief. Jones v. Bolles, 9 Wall. 364 [19 L. Ed. 734]."

This decision was affirmed by the Circuit Court of Appeals for the Second Circuit. Parker v. Black, 151 Fed. 18, 80 C. C. A. 484. The court said:

"The point is taken, however, that there was a full, adequate, and complete remedy at law to recover the preferential transfer in controversy; and the defense was set up in the answer. Upon this point we think we should follow the decisions made by two different Circuit Courts of Appeals upon a state of facts practically identical with those of the present case, notwithstanding we should have been of a different opinion if the question had been originally presented to us. See Wall v. Cox, 101 Fed. 403, 41 C. C. A. 408; Off v. Hakes, 142 Fed. 364, 73 C. C. A. 464."

The same court, in Parker v. Sherman, 212 Fed. 917, 129 C. C. A. 437, a suit brought under section 67e of the Bankruptcy Act, through Circuit Judge Lacombe, said:

"The suit was in equity, and defendant, under properly reserved exceptions, contends that it cannot be maintained, because complainant has an adequate and sufficient remedy at law. The case is on all fours with the one before us in Parker v. Black, 151 Fed. 18, where, in order that uniformity in bankruptcy practice in the several circuits might be secured, we followed the decisions of two other Circuit Courts of Appeals, although inclined, had it been a new question, to take a different view."

In Grandison v. National Bank of Commerce of Rochester, 220 Fed. 981, a suit brought under section 60b of the Bankruptcy Act, in the District Court, Western District of New York, the court said:

"The objection to the jurisdiction of the court is overruled on the authority of Gregory v. Atkinson (D. C.) 127 Fed. 183, and Parker v. Black (D. C.) 143 Fed. 560."

Opposed to these conclusions is Warmath v. O'Daniel, 159 Fed. 87, 86 C. C. A. 277, 16 L. R. A. (N. S.) 414, in which the court had under consideration a plenary suit under section 60b of the Bankruptcy Act, to recover a preference, and held that there was an adequate remedy at law, that no equitable relief was required, and that under Rev. St. § 723 (Comp. St. 1913, § 1244), suit in equity could not be maintained. Judge Severens, for the court, said:

"The question on this appeal which arises on the first two of the assignments of error is whether the court below was right in overruling the appellant's contention on his demurrer that the suit was not properly brought in equity for the reason that there was a plain, adequate, and complete remedy by an action at law. The objection was taken at the threshold, and the question is not embarrassed by the laches of the defendant in raising it. We think the court should have sustained the demurrer. The judgment sought was for a definite sum of money, precisely that which the court by its decree awarded to the complainants. And the whole sum was recoverable, if any of it was; for the assets of the estate would not come near the amount of the debts. There was no contingency in the liability, or apportionment of the burden among several defendants to be made by the judgment. The response of the court to the demand of the complainants was simply an allowance or refusal of it. Nor was there any embarrassment in the procedure. The evidence produced would be, and was in this case, as completely available in an action at law as in a court of equity. No injunction was sought or required. The issue was one which a jury could readily understand and decide under proper instructions from the court in respect to the law. It is suggested that the court must first set aside the transfer before it could proceed to judgment, and that it is the peculiar province of a court of equity to set aside unlawful transfers. This is an ingenious, but unsubstantial, figment. No distinct or formal preliminary action

was required or contemplated by the statute. If the defendant had obtained part of the estate which should have come to all the creditors, proof of that fact would entitle the trustees to recover it. Perhaps there may be cases where a declaration of the court may be necessary to completely fulfill all requirements, as where the transfer has been accomplished by a deed or other solemn instrument which may be made matter of record, or is a muniment of * * * the right to sell and convey or mortgage, or do such other things with it as belong to ownership. But in the present case nothing is stated in the bill which makes such a proceeding necessary, nor indeed is anything more required than in any ordinary action at law where the plaintiff is always bound to establish the facts which create the liability, whereupon, and without more, the court gives judgment for the sum he is entitled to recover. * * * The right of a defendant to have his liability determined in an action at law is a substantial one, the value of which is recognized and protected by the statute (section 723, Rev. St. [U. S. Comp. St. 1901, p. 583]), which declares that 'suits in equity shall not be sustained in either of the courts of the United States in any case where a plain, adequate, and complete remedy may be had at law.' The defendant is thereby given an opportunity to have his controversy tried by a jury, a privilege of sufficient importance to be secured by the Constitution and guarded by this positive statute. * * * It is also urged that courts of equity have jurisdiction in cases of fraud, which is true enough but the doctrine has its limitation in that the fraud is not remediable by an action at law. A man may acquire another's property by fraudulent misrepresentations; but if the latter may obtain complete relief in an action at law, as by a judgment for damages or for the recovery of the property by an action of replevin, he cannot resort to a suit in equity."

In Sessler v. Nemcof (D. C. E. D. Pa.) 183 Fed. 656, a trustee in bankruptcy brought a bill in equity, setting out three causes of action—the first based on the alleged conversion of money by defendant, intrusted to him by bankrupt to pay his notes; the second, on the alleged theft or unlawful conversion of property of bankrupt; and the third, on the alleged sale of goods by bankrupt to defendant with intent to defraud creditors and payment of the price to bankrupt after bankruptcy. It was not alleged that any of the money or property remained in defendant's possession. In refusing to entertain the bill the court said:

"If the trustee has an adequate remedy at law, a bill in equity cannot be maintained in this or in any other court. Whatever equitable jurisdiction may have been conferred upon the District Court by the Bankruptcy Act * * * and the amendment thereto, * * * it is confined to controversies relating to a bankrupt estate. Within this limited area whether or not a bill in equity may be maintained must be tested by the ordinary rules that govern bills before any other tribunal, and perhaps the most familiar test is to inquire whether the plaintiff has an adequate remedy at law. A decree may be entered dismissing the bill."

The most recent expression is in the case of First State Bank of Milliken v. Spencer, decided by the Circuit Court of Appeals for the Eighth Circuit, and reported in 219 Fed. 503, 135 C. C. A. 253, where a trustee in bankruptcy sought to recover the sum of $1,100 claimed to have been paid to defendant by bankrupt under such circumstances as to constitute a voidable preference. Demurrer was interposed to the bill of complaint on the ground that the bill on its face showed no grounds of equitable relief, and that the equity side of the court had no jurisdiction of the matters therein complained of, and that any right of action the plaintiff had was purely of legal cognizance. The

trial court overruled the demurrer, and after trial, judgment was entered. The Circuit Court, on appeal, through Judge Carland, said:

"The question before us is not whether a court of equity could grant the relief prayed for, but whether the trial court erred in not following the command of section 267, Judicial Code [Comp. St. 1913, § 1244], which reads as follows: 'Suits in equity shall not be sustained in either of the courts of the United States in any case where a plain, adequate, and complete remedy may be had at law.' No reason can be suggested why the remedy at law to recover the money in question was not plain, adequate, and complete. If this be so, then the appellant was not only deprived of a substantial right, including a trial by jury, but the plain command of the statute was not followed. It would seem from some of the decisions that courts have fallen into the habit of treating the requirement of the statute lightly where relief can be given in equity. If, in a particular case, the remedy at law is plain, adequate, and complete, then under the statute in such case there can be no concurrent jurisdiction between a court of equity and a court of law, if objection is seasonably made. The statute quoted declared no new principle, but the principle itself which has always ruled courts of equity was of such importance that Congress crystallized it by legislation and placed the matter beyond dispute. It would therefore seem to be the duty of courts to give force and effect to the statute whenever it is applicable. 'This enactment certainly means something.' New York Guaranty Co. v. Memphis Water Co., 107 U. S. 205–214, 2 Sup. Ct. 279, 27 L. Ed. 484. * * * It is entirely irrelevant to say that this is a bankruptcy proceeding, and, as all bankruptcy proceedings are in the nature of equitable actions, therefore this suit is an equitable action. The truth is that it is simply a suit or proceeding arising out of bankruptcy, and whether it shall be prosecuted in equity or at law depends upon the nature of the case and the relief demanded."

The court quotes with approval from the decision of the Circuit Court of Appeals in Warmath v. O'Daniel, supra, and distinguishes or comments upon practically all of the decisions of the Circuit and District Courts recognizing a contrary rule, and in referring to Off v. Hakes, supra, said:

"An examination of the opinion in that case shows that one of the grounds for assuming jurisdiction in equity in that case was that the objection that the proceeding must be at law was not seasonably taken."

And of Wall v. Cox, supra, it said:

"This was simply a creditors' bill, and of course equity had jurisdiction."

And in commenting upon Parker v. Black and Parker v. Sherman, supra, at page 507 of 219 Fed., on page 257 of 135 C. C. A., it said:

"We are not persuaded that a court may set aside the expressed command of a statute for the sake of uniformity of decision."

And in criticizing the decision in Pond v. Bank, supra, it said:

"This question of fraud, however, is well disposed of in Warmath v. O'Daniel, supra. The question of fraud has no importance if there is a plain, adequate, and complete remedy at law. Buzard v. Houston, 119 U. S. 347, 7 Sup. Ct. 249, 30 L. Ed. 451."

In the absence of expression of the Circuit Court of Appeals of this circuit, and the Supreme Court, and harmonious expression from other circuits, on examination of the act and application of the rule of reason, we find that proceedings in bankruptcy are distinguished from suits arising in bankruptcy, under section 23b, and District Courts are given jurisdiction of all controversies at law and in equity, *as dis-*

tinguished from proceedings in bankruptcy, "between trustees as such and adverse claimants, concerning the property acquired or claimed by the trustees." Bardes v. Hawarden Bank, supra, 178 U. S. at page 536, 20 Sup. Ct. at page 1005, 44 L. Ed. 1175. Under sections 60b and 67e actions are plenary, and not proceedings in bankruptcy. By the amendment of 1903 jurisdiction of causes predicated upon the sections named was given to *"any court of bankruptcy as hereinbefore defined,"* to be exercised concurrently with "any state court which would have had jurisdiction if bankruptcy had not intervened." In section 1 of the act (Comp. St. 1913, § 9585) we find "courts of bankruptcy" defined as the District Courts of the United States, the Supreme Court of the District of Columbia," etc.; and in section 2 of the act (section 9586) "bankruptcy courts" are "invested * * * with such jurisdiction *at law and in equity* as will enable them to exercise original jurisdiction in *bankruptcy proceedings.* * * *"*

"Proceedings in bankruptcy * * * are in the nature of proceedings in equity; and the words 'at law,' in the opening sentence conferring on the courts of bankruptcy 'such jurisdiction, at law and in equity, as will enable them to exercise original jurisdiction in bankruptcy proceedings,' may have been inserted to meet clause 4, authorizing the trial and punishment of offenses, the jurisdiction over which must necessarily be at law and not in equity." Bardes v. Hawarden Bank, supra.

The decision in Bardes v. Hawarden Bank, supra, was rendered prior to the amendment of 1903. The act of 1898 in its original form gave to bankruptcy courts jurisdiction over *proceedings in bankruptcy* only, and as the only proceedings under the act as it then stood, of a legal nature, were proceedings under clause 4 of section 2, authorizing the trial and punishment of offenses, and as stated by the court, the words "at law" were probably inserted to meet the provisions of that clause. The amendment of 1903 to the sections named extends the jurisdiction of "courts of bankruptcy" to the plenary actions therein referred to. The functions of bankruptcy courts are generally equitable; and yet where it is necessary for them to exercise legal functions (as in clause 4, § 2) that power is conferred. The concluding clause of section 2, supra, provides that:

"Nothing in this section contained shall be construed to deprive a court of bankruptcy of any power it would possess were certain specific powers not herein enumerated."

The bankruptcy courts, in exercising jurisdiction over the plenary suits predicated upon the sections named, must exercise equitable or legal jurisdiction according to the nature of the actions. To determine which is the appropriate remedy, a consideration of the nature of relief sought is necessary, in the light of section 267 of the Judicial Code, which provides:

"Suits in equity shall not be sustained in any court of the United States in any case where a plain, adequate, and complete remedy may be had at law."

"It would be difficult, and perhaps impossible, to state any general rule which would determine, in all cases, what should be deemed a suit in equity as distinguished from an action at law, for particular elements may enter into consideration which would take the matter from one court to the other; but this may be said: That, where an action is simply for the recovery and possession

of specific real or personal property, or for the recovery of a money judgment, the action is one at law." Whitehead v. Shattuck, 138 U. S. 147, at page 151, 11 Sup. Ct. 276, at page 277 (34 L. Ed. 873).

The provisions of sections 60b and 67e, supra, disclose a wide difference as to what is required to show liability. To establish a liability under the former section no actual fraud need be shown. The section merely condemns a transfer by bankrupt within four months for the purpose of creating a preference, providing the party receiving the transfer has reasonable cause to believe that a preference was intended. The legal remedy is entirely adequate, and no relief is offered in equity that the law does not afford. To establish a liability under section 67e actual fraud must be shown, and suits under that provision are peculiarly within the cognizance of and should be entertained by the equity court. Justice Day in Coder v. Arts, 213 U. S. 223, at page 241, 29 Sup. Ct. 436, at page 443 (53 L. Ed. 772, 16 Ann. Cas. 1008), says:

"A consideration of the provisions of the bankruptcy law as to preferences and conveyances shows that there is a wide difference between the two, notwithstanding they are sometimes spoken of in such a way as to confuse the one with the other. A preference, if it have the effect prescribed in paragraph 60, enabling one creditor to obtain a greater portion of the estate than others of the same class, is not necessarily fraudulent. Preferences are set aside when made within four months, with a view to obtaining an equal distribution of the estate, and in such cases it is only essential to show a transfer by an insolvent debtor to one who himself or by his agent knew of the intention to create a preference. In construing the Bankruptcy Act this distinction must be kept constantly in mind. As was said in Githens v. Shiffler, 112 Fed. 505: 'An attempt to prefer is not to be confounded with an attempt to defraud, nor a preferential transfer with a fraudulent one.' In Re Maher, 144 Fed. 503, 509, it was well said by the District Court of Massachusetts: 'In a preferential transfer the fraud is constructive or technical, consisting in the infraction of that rule of equal distribution among all creditors, which it is the policy of the law to enforce when all cannot be fully paid. In a fraudulent transfer the fraud is actual, the bankrupt has secured an advantage for himself out of what in law should belong to his creditors, and not to him.' * * *"

And on page 242 of 213 U. S., on page 444 of 29 Sup. Ct. (53 L. Ed. 772, 16 Ann. Cas. 1008):

"We are of opinion that Congress, in enacting section 67e, and using the terms 'to hinder, delay or defraud creditors,' intended to adopt them in their well-known meaning as being aimed at conveyances intended to defraud. In section 60 merely preferential transfers are defined, and the terms on which they may be set aside are provided. In section 67e, transfers fraudulent under the well-recognized principles of the common-law and the statute of Elizabeth are invalidated. * * * Such transfers have been held to be only those which are actually fraudulent."

Plaintiff has alleged a conspiracy to make the preference charged in the first cause of action. Since conspiracy is not necessary to substantiate the charge, that allegation must be treated as mere surplusage, and does not change the true nature of the action. As to the first cause of action plaintiff has a plain, adequate, and complete remedy at law, and the defendant has the right to have the issue of fact determined by jury. This is a valuable right of which the court has no power to deprive it. Fraud is of the essence of the charge in the second cause

of action, and equity courts are peculiarly adapted to deal with such actions.

The motion as to the first cause of action is granted, and denied as to the second. The third cause of action is dismissed.

UNITED STATES v. MARRIN.

(District Court, E. D. Pennsylvania. October 22, 1915.)

Nos. 44–46.

1. COURTS ⟹495—PRIORITY OF JURISDICTION—FEDERAL AND STATE COURTS—COMITY.

That a person is under sentence of imprisonment in the state of New York, but has been paroled within the state, under the state statute by which he is still subject to imprisonment for the remainder of his term for violation of his parole, does not exempt him from being arrested and taken to another state to serve a sentence imposed on him by a federal court there, where no objection is made by the court or authorities of New York; the question of priority of jurisdiction being one of comity, and not one of personal right in the defendant.

[Ed. Note.—For other cases, see Courts, Cent. Dig. §§ 1376–1385; Dec. Dig. ⟹495.]

2. CRIMINAL LAW ⟹999—COMMITMENT—LOSS OF JURISDICTION AFTER SENTENCE—INTERVENING IMPRISONMENT.

That a defendant, after conviction and sentence to imprisonment for a criminal offense, but before commitment, is also convicted and sentenced for a different offense in another jurisdiction, and is thereunder imprisoned for a time longer than the term imposed by his first sentence, is not a legal bar to the issuance of a warrant of commitment under the latter, when he is again brought within the jurisdiction.

[Ed. Note.—For other cases, see Criminal Law, Cent. Dig. §§ 2550–2553; Dec. Dig. ⟹999.]

3. COURTS ⟹475—"COMITY."

"Comity" is a doctrine founded in necessity, meaning the rule under which one authority gives way to another, and has no application where what is done by one court is with concurrence of the other. It answers, with courts and cabinets, in law and diplomacy, substantially the same purpose which personal courtesies serve in the social relations. One principle is that the court which first asserts jurisdiction may continue its assertion without interference from the other.

[Ed. Note.—For other cases, see Courts, Cent. Dig. §§ 1229, 1231–1239, 1247–1259; Dec. Dig. ⟹475.

For other definitions, see Words and Phrases, First and Second Series, Comity.]

Criminal prosecution by the United States against Frank C. Marrin. On petition for writ of habeas corpus and application for order of commitment. Writ denied, and warrant of commitment granted.

John H. Hall, Asst. U. S. Atty., and Francis Fisher Kane, U. S. Atty., both of Philadelphia, Pa.

John G. Kaufman and V. Gilpin Robinson, both of Philadelphia, Pa., for defendant.

⟹For other cases see same topic & KEY-NUMBER in all Key-Numbered Digests & Indexes

DICKINSON, District Judge. An outline statement of a few facts will be helpful to enable us to understand in what way the questions discussed in this case arise, and to follow the course which the discussion has taken:

Frank C. Marrin, the defendant, was convicted in this court on October 5, 1907, and on March 18, 1908, was sentenced to the payment of a fine and four years' imprisonment. He took an appeal from the judgment of conviction, and was admitted to bail pending its disposition. The appeal was unsuccessful, and on March 10, 1909, a mandate came down from the Circuit Court of Appeals affirming the judgment of conviction, and remanding the record of the case to this court to have the sentence carried into execution. The defendant failed to appear, and his bail failed to produce him. In consequence his recognizance was forfeited. This forfeiture the court refused to remit. United States v. Marrin (D. C.) 170 Fed. 476. On September 10, 1915, he was found in the state of New York and was taken into custody, and by order of the United States District Court for the Northern District of New York was remanded to this jurisdiction, and is now in the custody of the United States marshal here. The authority of the marshal for holding him is implied in the part of the record of the case above quoted.

This court was then asked to issue the usual order of commitment. This is asked for on the basis of the defendant being a fugitive from justice following a forfeiture of his recognizance to appear here to submit himself to commitment to have the sentence imposed carried into execution. This application is met by a petition for a writ of habeas corpus. This petition in its turn is based upon the following state of facts:

There is a denial of the fact that the defendant has absconded. Before his indictment for the offense of which he was here convicted, the defendant had been indicted in a state court of Kings county, N. Y., for an offense alleged to have been previously committed against the laws of the state of New York. For this he had not at that time been tried. Pending the decision of the appeal above referred to, and while within the jurisdiction of this court, he was arrested by the New York state authorities, with a view to have him sent to Kings county, N. Y., for trial under the indictment there found against him. He thereupon made application to this court for a writ of habeas corpus on the ground that, being in the custody of this court, through the bail entered by him, this court should not permit him to be taken out of its custody into another jurisdiction. The writ was allowed, and the defendant relieved of this arrest and remanded to the custody of his bail.

With matters in this situation, the defendant voluntarily, and presumably with the consent of his bail, expressed or implied, left this jurisdiction and went into the state of New York. He was there again taken into custody by the New York state authorities with a view to his trial under the indictment above mentioned, found against him in Kings county. He made application for his discharge from that arrest on the plea that he was subject to the control of this court

and of the Circuit Court of Appeals of this circuit until his appeal should have been finally disposed of and the sentence of this court reversed or carried into effect. In this application he was unsuccessful. The ruling appears to have been based upon the ground that the question of to which court he should be answerable was a question, not of the right of the defendant, but of comity in the exercise of the powers of the court of each of these respective jurisdictions. The court therefore declined to order his release unless either the authorities of the United States or the bail should intervene to ask it. Both the United States authorities and the bail refused to interfere, or at least stood mute and did not interpose in the proceedings. The opinion of Judge Chatfield accompanying this ruling is reported in 164 Fed. 631.

Marrin was accordingly tried, convicted, and the conviction on appeal affirmed, and he was sentenced to an indeterminate term of from 15 to 20 years in the proper prison of the state of New York. Another effort to be relieved of imprisonment in the state of New York was made by the defendant. This was in the form of an application to transfer the custody of defendant to this court. This was refused; the opinion of Judge Gavegan planting the refusal on the ground of lack of power. People v. Benham, 71 Misc. Rep. 345, 128 N. Y. Supp. 610.

It may be well to make clear by explicit statement, what is implied in the foregoing, that the two offenses to which we have referred were in every sense distinct and separate, and there is no connection in any way between the two. Following the conviction last referred to Marrin was committed in pursuance of the sentence then imposed, and remained in prison for a period of nearly 7 years.

By the provisions of the New York statutes certain convicts become entitled to what is the practical equivalent of a commutation of sentence through and by the parole system which is in vogue in that state. Marrin was made the recipient of the benefits of this parole provision of the statute. He was also given the benefit of the exercise of executive clemency. The precise form in which this benefit was conferred is argued to be of importance here, and so far as of importance to this discussion will be referred to later.

It should be interpolated at this point that the authorities of the United States, while not intervening to interfere with either the trial, sentence, or the carrying out of the sentence of the New York state court after the commitment of the defendant under that sentence, lodged with the authorities of the prison in which he was incarcerated the usual detainer for the purpose of holding him to answer to his sentence here. Upon release of Marrin from actual detention within his prison walls, the authorities of the United States claimed the detainer to have come into operation and took him into custody.

The defendant again had recourse to habeas corpus proceedings, in which he raised the question of the legality of his arrest. He raised also substantially the same question by opposition to the application to have him sent into this jurisdiction. The result of these several efforts is shown by the fact of his presence here under an order of removal.

In his present application he re-raises the same questions and reasserts his position. To fully present them, it is necessary to include a statement of the provisions of the New York Code on the subject of parole. All of them need not be quoted, as one may be taken as typical of all. That is the provision that a condition of the parole is that the paroled convict shall not go outside of the territorial limits of the state of New York, and shall, at stated times, report to the New York state prison authorities, and that these reports shall be viséd by the person in whose custody the order of parole has placed the convict. This very practical predicament is presented. The sentence of the New York state court may result in an imprisonment for 20 years. Although released upon parole, if the condition referred to is violated, the relator may incur as a consequence 13 years additional servitude.

[1] The questions presented by him through this application, and earnestly and forcibly urged by his counsel, are in substance and effect two. We will invert the order of their presentation. One is that in legal effect and intendment Marrin is still in the custody of the New York state authorities, or, as the point made may for emphasis be put, he is still in a New York prison. The proposition presented is that to take him away from the New York authorities and to bring him here is in legal intendment and effect the same as if he were taken while within the walls of the New York state prison there serving the sentence imposed upon him. The point made is that, while as a physical fact he has been brought within this jurisdiction, the whole process by which he was brought was unwarranted and illegal, and that this court should therefore refuse to further detain him, but should remand him to the custody of the authorities of the state of New York, from whose custody he was thus unlawfully taken.

The other proposition presented is that there is no authority of law to commit Marrin to prison here, other than the authority of his original sentence, and, as the time limit of that sentence has already long since expired, there is no lawful authority to detain him further; or to present the same thought in another form, the operation of the two sentences imposed was concurrent, and the sentence here imposed ran itself out during the running of the other.

It is too clear for the necessity of the citation of supporting authorities that any court has the power to assert its jurisdiction and in the legal sense preserve its dignity by preventing the interference of any other authority with the work which that court had in hand to do. In the enforcement of this principle courts will relieve from arrest, and even from the service of civil process, parties or witnesses who are in attendance upon the business of the court. In recognition of the same principle no court will direct the service of its process upon persons who are thus in attendance upon another court. These propositions are stated, not because they are in dispute here, but merely for the purpose of securing a starting point from which the discussion may proceed.

[3] Beginning, therefore, with the principle above adverted to, the question, which in its application to the facts of this case would seem to be the controlling one, is whether the principle is one which may be

invoked by the individual concerned as a right belonging to him, or whether the principle, when applied by a court, follows the doctrine of comity. We have said this was probably controlling, because it would seem to follow that the doctrine of comity could have no application where what had been done was with the concurrence of both courts of the conflicting jurisdictions. The whole doctrine of comity arises out of necessity. If a person be answerable to two different jurisdictions for offenses against the laws of each, it is a physical fact that he cannot be, at the same time, in the separate control of each. It is therefore necessary that one give way to the other for the time being. It is convenient and desirable that there be a rule by which it can be determined which authority shall make way for the other. This rule is that known as the rule of comity. It answers with courts and cabinets, in law and in diplomacy, substantially the same purpose which personal courtesies serve in the social relations of life. One of the principles is that the court which first asserted jurisdiction may continue its assertion without interference from the other.

The position of the United States here is that the doctrine is applied wholly and solely out of the deference paid by one court to another, and if that court which under the rule mentioned would be accorded full and free sway for the assertion of its power yields to the exercise of the jurisdiction of the other court, no right of the individual defendant concerned is involved. In other words, the court which has the possession of the person of a defendant who is also subject to the control of another court will exercise its power in accordance with a discretion which is governed in its exercise by the rule of comity, to which reference has been made. This is the principle which has been heretofore applied in the case of the present defendant, and which has sufficient supporting authority in Mahon v. Justice, 127 U. S. 700, 8 Sup. Ct. 1204, 32 L. Ed. 283.

There is no reason supplied by the facts of this case to induce this court to decline to have its sentence carried into effect out of regard to any spirit of comity, because it clearly appears that the courts of the other jurisdiction to which this comity would be due have neither asked for nor expected its extension. This conclusion is consistent with the rulings to which we have been referred by counsel for the relator, of which In re Jones may be taken as typical. There it is true that the court released the relator, but it was done because the court thought the case was a proper one for the application of the quoted principle. Had the facts of that case been the facts of this case, the court might have reached a different conclusion in accordance with the principle upon which that case was ruled.

[2] This brings us to the second position of the relator. It is in effect that, Marrin having been convicted and sentenced by this court, and before undergoing imprisonment under that sentence having been sentenced by the court of Kings county, N. Y., and having served that sentence, he has in intendment of law served the sentence here imposed; the term of the first sentence as originally imposed having now expired.

As authority in support of this contention we are referred to the case of In re Jennings (C. C.) 118 Fed. 479. We are constrained to

find that the principle upon which the Jennings Case was ruled falls short of supporting the position of the present defendant. In that case the defendant had been sentenced, and a warrant of commitment had issued, the command of which was that the marshal should take charge of the prisoner, who was to be kept in the United States prison maintained at Ft. Leavenworth. In disregard of his duty and the command of the writ, the marshal, of his own accord and utterly without any authority so to do, turned the custody of the defendant over to another jurisdiction. The defendant was taken into that jurisdiction, convicted, and sentenced, and committed to jail to serve out the term of his imprisoment. Subsequently, and after the expiration of the term of his original sentence and that mentioned in the warrant of commitment, he was again taken into custody by the marshal, to whose custody he had been committed, who undertook to hold him for a further term of imprisonment measured by the original sentence. The defendant sued out a writ of habeas corpus. The return showed that the only authority for the deprivation of his liberty was a warrant of commitment, the authority of which had already expired by its own terms. On the face of the pleadings, therefore, there was absolutely no authority for the retention of the prisoner, and he was in consequence discharged.

A reference to the practice and the technical forms of procedure in such cases will bring out clearly the principle which the court applied in the Jennings Case, and which is applicable here. A formal statement of the whole situation involves the fact of first a conviction and then a sentence. What follows is in the nature of execution process. When a prisoner is brought to the keeper of the jail, the prison authorities, before they can receive him, must have some authority for so doing. This is practically supplied in the form of a warrant of commitment, which directs them to receive the prisoner and to hold him for a given length of time. A case may arise, and frequently does, in which the time mentioned in the original sentence has expired before any commitment issues authorizing the prison authorities to receive the prisoner. A man, for instance, may be convicted and sentenced. From this judgment he may take an appeal, and the appeal may not be disposed of until after the term of the sentence has expired. If a warrant of commitment authorized the jailer only to hold the prisoner in accordance with the language of the original sentence, that term would already have expired when the commitment was received.

There may also be the case of a man who has been convicted and sentenced, and who evades the authorities until after the time of his original sentence has elapsed. He may then be apprehended or surrender himself. If the instructions in the warrant of commitment followed the language of the original sentence, and authorized the jailer only to hold him during the term for which originally sentenced, it would obviously confer no authority to hold him at all. Out of this as a necessary consequence has come the practice of issuing warrants of commitment in accordance with the facts, and hence also the application for a warrant here. In the Jennings Case, as the authority in the warrant of commitment which the marshal held had expired, he was without the possession of authority to hold the prisoner, and the

prisoner must be discharged, unless there was authority to hold him. The only authority which could be secured was by an application to the court for a warrant to commit the prisoner to serve the term of imprisonment which he had not served. It was, of course, within the power of the court to either grant or withhold such authority, and really what the Jennings Case rules is that, when the court has given such authority to the marshal, and he, without the sanction of the court, refuses to act upon it, and without warrant of law turns the custody of the prisoner over to somebody else, the court under such circumstances will refuse to find as a fact that the prisoner has not served his sentence, but will assume that he has served it, and will in consequence refuse authority for his further imprisonment. If in that case the fact had been that the prisoner on the way to jail had escaped, and had eluded the officers until after the term of his imprisonment had expired, and the court had been then asked for authority for his commitment, it would, without doubt, have been granted, and the fact that the prisoner had spent the intermediate time in a jail in another jurisdiction would not in any way affect the question.

The whole question, therefore, resolves itself into one of the propriety of the court now issuing an order of commitment against the defendant to serve the sentence, no part of which has been served. The United States, as already stated, asks for this on the ground that the defendant is an absconder. The defendant opposes it upon the ground that he is not an absconder, but that he failed to surrender himself because of his inability to do so, and that this inability resulted from two things. One was his arrest by the New York state authorities, and the other was the acquiescence of the United States authorities in his detention there. Practically the position taken is that, inasmuch as the United States authorities might have had control of the defendant 7 years ago, and might then have had him committed to serve his sentence, and inasmuch as they voluntarily did not do it then, the court ought not now to commit him to jail; the time of his original sentence having expired. This plea is enforced by a strong and moving appeal on the ground that the man has already served an imprisonment of 7 years, that by good conduct and the confidence of the New York state authorities that he will comply with the conditions of his parole he has been restored to a conditional liberty, and that the effect of his commitment here will be to make him unable to comply with the condition of his parole, and will in consequence subject him to the possibility of a further imprisonment of perhaps 13 years.

There is also implied the presence of this situation. The defendant was under bail. The New York arrest prevented him from surrendering himself. The United States had the option of asking for his return to this jurisdiction or of forfeiting his recognizance. They voluntarily and deliberately chose the latter, and ought not now to return to the former. The appeal here is to the ethical standards by which the executive should be controlled. We can pass only upon the legal rights of the defendant.

We can see no escape from the conclusion that defendant's appeal is properly made to those authorities which have the extension of clem-

ency within their powers, and that this court is now concerned only with the two questions of law which have been raised, and as to them the conclusions are, first, that the defendant as a fact has not served the sentence imposed upon him, or any part of it; and, second, that he, being now within and subject to the jurisdiction of this court, may be committed to serve the sentence imposed upon him without the violation of any right flowing from the fact that he is also under and serving a sentence imposed upon him by another court. The statement of these conclusions disposes, so far as this court is concerned, of the questions raised and discussed.

The order of commitment applied for is allowed. As no valid grounds for the discharge of the prisoner are disclosed in his petition for a writ of habeas corpus, the writ might be refused; but, as counsel may prefer to have the formal record show a remanding of the prisoner, the writ may be allowed, and the answer to the petition filed as a return to the writ, and a formal order made that the discharge of the prisoner is refused, and that he be remanded to the custody of the marshal, to have the order of commitment now made complied with.

AMERICAN SHEET & TIN PLATE CO. v. WINZELER.

(District Court, N. D. Ohio, W. D. April 16, 1915.)

No. 2478.

1. COURTS ⟹280—FEDERAL COURTS—DETERMINATION OF JURISDICTIONAL QUESTIONS.

The District Court, separately from the trial on the merits, may hear and determine questions relating to its jurisdiction in any pending action, whether raised by objections to the complaint, plea in abatement, or by motion pending trial.

[Ed. Note.—For other cases, see Courts, Cent. Dig. §§ 816–818; Dec. Dig. ⟹280.]

2. COURTS ⟹329—FEDERAL COURTS—JURISDICTIONAL AMOUNT—CONCLUSIVENESS OF AD DAMNUM CLAUSE.

The statement of the amount of the claim in the ad damnum clause of the complaint does not give the District Court jurisdiction, unless the facts pleaded sufficiently support the assertion of damages, so as to show that the statement of the amount involved is either in good faith or is open to fair controversy.

[Ed. Note.—For other cases, see Courts, Cent. Dig. § 897; Dec. Dig. ⟹329.]

3. COURTS ⟹328—FEDERAL COURTS—DISTRICT COURT—JURISDICTIONAL AMOUNT—COUNTERCLAIM.

When the jurisdictional amount in a suit in the District Court is in question, the tendering of a counterclaim in an amount which in itself, or when added to the amount of the petition's ad damnum, makes up the jurisdictional amount, establishes jurisdiction, whatever the state of the complaint.

[Ed. Note.—For other cases, see Courts, Cent. Dig. §§ 890–896; Dec. Dig. ⟹328.]

⟹For other cases see same topic & KEY-NUMBER in all Key-Numbered Digests & Indexes

4. COURTS ⚷280—FEDERAL COURTS—JURISDICTION—JURISDICTIONAL AMOUNT.
Where, in an action in the District Court, the defendant moved for leave to plead separately to the jurisdiction, without prejudice to his right to plead to the merits and to assert any counterclaim, on the ground that the amount involved, exclusive of interest and costs, was less than $3,000, alleging that the plaintiff's claims were fictitious, and made for the sole purpose of making it appear on the record that the amount involved the jurisdictional limit of the court, such motion will be denied, since its granting would establish a precedent, making it possible in any action at law for a defendant to procure an exhibit of the whole of the plaintiff's case prior to preparing his answer, while the defendant, in answering, could plead such facts as affected the good faith of the complaint, tending to show that the jurisdiction of the court was improperly sought, not merely facts tending to reduce the amount of plaintiff's complaint below the jurisdictional amount, and with such defense could set up any counterclaim, which, if evidence on the defense of want of jurisdiction established that the court was improperly entered, the defendant, following favorable action on his motion to dismiss the complaint, might dismiss his counterclaim without prejudice, gaining all sought by the motion to plead to the jurisdiction.

[Ed. Note.—For other cases, see Courts, Cent. Dig. §§ 816–818; Dec. Dig. ⚷280.]

At Law. Action by the American Sheet & Tin Plate Company against H. S. Winzeler. On motion for leave to plead to the jurisdiction. Motion overruled.

Squire, Sanders & Dempsey, of Cleveland, Ohio, and C. A. Seiders, of Toledo, Ohio, for plaintiff.

Chas. A. Bowersox, of Bryan, Ohio, and Harry E. King, of Toledo, Ohio, for defendant.

KILLITS, District Judge. Plaintiff pleads a cause of action against the defendant, growing out of a contract whereby the defendant agreed to buy of the plaintiff six car loads of steel of certain quality and price. It is claimed that three car loads were delivered to defendant; that the defendant refuses to pay therefor, and that the sum due at the contract rate is $2,374.33; that the defendant further has attempted to cancel all orders made under the contract, and has refused to take, accept, or pay for any of the remaining goods, which it is alleged had been prepared and manufactured specially for the defendant under the terms of the contract; that the plaintiff has made tender of all the steel by it to be manufactured, and has performed all other things and conditions by it to be performed under the terms of the contract; that the loss to the plaintiff under this contract, by reason of the defendant failing to accept the remaining three cars of steel, measured by the difference between the contract price and the reasonable value of the goods at the time the action is brought, is in the sum of $1,279.55, making the total amount involved in this action for money only $3,653.88. That the exact question now before the court may be understood, we quote at large here the motion interposed by the defendant:

"The defendant, H. S. Winzeler, respectfully moves the court for leave to first plead separately to the jurisdiction of the court, for the reason that

the amount involved herein, exclusive of interest and costs, is less than three thousand dollars ($3,000), and that said plea may be filed, and, if controverted, be heard and determined without prejudice to defendant's right to plead to the merits of said action and to assert any counterclaims he may have against the plaintiff, which motion defendant makes for the following reasons: The claims alleged by plaintiff in the petition herein are founded on contracts providing for the purchase by defendant from plaintiff of seven cars of steel; that the invoice price of all of said steel shipped or delivered to defendant by plaintiff and yet unpaid for does not exceed two thousand four hundred and seventy and $^{35}/_{100}$ dollars ($2,470.35), liability for which defendant in no wise admits, but denies; and that the claims asserted in the petition for refusal of any of said steel as therein stated are untrue, groundless, and wholly fictitious, and made for the sole purpose of making it appear on the face of the record that the amount involved herein exceeds the sum of three thousand dollars ($3,000), exclusive of interest and costs."

[1] That the court, separately from the trial on the merits, may hear and determine questions relating to its jurisdiction in any action before it, whether those questions be raised by objections to the complaint or by a plea in abatement, or whether taken advantage of pending the trial, is unquestioned. Smith v. Greenhow, 109 U. S. 669, 3 Sup. Ct. 421, 27 L. Ed. 1080; Bowman v. Chicago & N. R. Co., 115 U. S. 611, 6 Sup. Ct. 192, 29 L. Ed. 502; Barry v. Edmunds, 116 U. S. 550, 6 Sup. Ct. 501, 29 L. Ed. 729; Schunk v. Moline, M. & S. Co., 147 U. S. 505, 13 Sup. Ct. 416, 37 L. Ed. 255; Wetmore v. Rymer, 169 U. S. 115, 18 Sup. Ct. 293, 42 L. Ed. 682; North American Transp. & T. Co. v. Morrison, 178 U. S. 262, 20 Sup. Ct. 869, 44 L. Ed. 1061; Globe Refining Co. v. Landa Cotton Oil Co., 190 U. S. 540, 23 Sup. Ct. 754, 47 L. Ed. 1171.

[2] The rule which these cases establish is that the mere statement of the amount of the claim in the ad damnum clause does not clothe the court with jurisdiction unless the facts pleaded sufficiently support the assertion of damages to suggest that the statement of the amount involved is either in good faith, or is open to fair controversy. In Stillwell-Bierce et al. v. Williamston Oil & Fertilizer Co. (C. C.) 80 Fed. 68, the court states the rule to be this:

"Whenever by an inspection of the complaint—perhaps of the whole record—it appears that the amount claimed is within the jurisdictional limit, or that, being apparently beyond it, the statement is collusive, or a fraud on the jurisdiction, the court must dismiss the cause. But when it is necessary, in order to ascertain the amount involved in controversy, to consider conflicting testimony, or to decide disputed questions of law, this necessity alone gives the court jurisdiction. The court, under such circumstances, must hear the case, and reach its conclusion judicially; in other words, must take jurisdiction. Nor is it enough that there appears to be a valid defense to a part of the claim ([Schunk v. Moline, Milburn & Stoddard Co.] 147 U. S. 505 [13 Sup. Ct. 416, 37 L. Ed. 255]), nor that the judge should be under a personal conviction, however strong, that the amount really in controversy is within the limit prescribed for the court. The facts made distinctly to appear in the record must create a legal certainty of the conclusion based on them. [Barry v. Edmunds] 116 U. S. 559 [6 Sup. Ct. 501, 29 L. Ed. 729]."

The pleading in this case does not exhibit the vice found in the complaint in Globe Refining Co. v. Landa Cotton Oil Co., 190 U. S. 540, 23 Sup. Ct. 754, 47 L. Ed. 1171, but it is clearly on its face a claim proffered in perfect good faith, and with averments which, if

the facts are resolved in favor of the plaintiff, amply support the amount claimed as damages.

[3] It is established, of course, that, when the jurisdictional amount is in question, the tendering of a counterclaim in an amount which in itself, or added to the amount claimed in the petition, makes up a sum equal to the amount necessary to the jurisdiction of this court, jurisdiction is established, whatever may be the state of the plaintiff's complaint. Lee v. Continental Insurance Co. (C. C.) 74 Fed. 424; Lewis Mercantile Co. v. Klepner, 176 Fed. 343, 100 C. C. A. 285; Merchants' Co. v. Clow, 204 U. S. 286, 27 Sup. Ct. 285, 51 L. Ed. 488.

[4] The mischief which may follow the establishment of a precedent in the granting of defendant's motion is plain. It is beyond all question that here the motion is offered in perfect good faith; but the precedent its granting would establish would make it possible in any action at law for a defendant to experiment in this way with the plaintiff's case, with the advantage, in case his views or hopes failed to be realized, of preparing his answer to the merits and his subsequent defense with a full exhibit of all the plaintiff's case in testimony.

Another undesirable result would be the doubling up of the court's work in many cases. Undoubtedly this situation should be avoided, as likewise the embarrassment which the defendant fears in being tied to a jurisdiction which he seeks to avoid, by the fact that in full assertion of his rights he finds himself compelled to assert a counterclaim.

We overrule the motion with this thought in view: It is competent for the defendant to plead such facts as in his judgment affect the bona fides of the complaint, not facts merely which tend to reduce the amount of plaintiff's complaint beyond the amount necessary to give this court jurisdiction, but those facts which tend to show that the jurisdiction of this court was improperly sought. With that defense, we see no reason why he may not set up his counterclaim in whatever amount he deems is due him. Should the evidence heard on the defense of want of jurisdiction establish clearly that this court was improperly entered, so that the defendant would be entitled to ask the court to dismiss plaintiff's case, we see no reason why defendant, following the favorable action upon his motion to dismiss, might not then dismiss without prejudice his counterclaim, and thus gain everything he seeks by his present motion.

The motion is overruled.

ISAAC McLEAN SONS CO. v. WILLIAM S. BUTLER & CO., Inc.

(District Court, D. Massachusetts. October 31, 1914.)

RECEIVERS ⟹149—PROVABLE CLAIMS—DAMAGES FOR BREACH OF CONTRACT OF EMPLOYMENT.

A receivership for a corporation, which is to result in the distribution of all of its property among its creditors, has the same effect as its bankruptcy would have had upon its unperformed contracts, and an employé, under an unexpired contract of employment not adopted by the receiver, may treat the contract as broken and prove a claim for damages for the breach against the estate, provided the amount of such damages can be determined by recognized methods of computation within the time allowed for proving claims.

[Ed. Note.—For other cases, see Receivers, Cent. Dig. §§ 261-266; Dec. Dig. ⟹149.]

In Equity. Suit by the Isaac McLean Sons Company against William S. Butler & Co., Incorporated. Heard on claims, disputed by receivers, of Elizabeth F. Sullivan, Agnes Murphy, James A. Gagnon, and John N. Jowett. Claims allowed.

See, also, 207 Fed. 705, 125 C. C. A. 223, and (D. C.) 208 Fed. 730.

Wm. F. Wharton, of Boston, Mass., for plaintiff.

Frederick H. Nash, of Boston, Mass., for defendant.

Choate, Hall & Stewart, of Boston, Mass., for receivers.

Malachi L. Jennings, of Boston, Mass., for claimant Sullivan.

Mrs. Mary Mahan, of Boston, Mass., for claimant Murphy.

Carver, Wardner, Cavanagh & Walker, of Boston, Mass., for claimant Jowett.

Lee M. Friedman, of Boston, Mass., for claimant Gagnon.

DODGE, Circuit Judge. The disputed claims above mentioned are among those referred to a special master, under the order of court entered December 15, 1913, relating to claims against the above-named company. Having heard the evidence relating to them, the master has reported as to each of the claims, allowing it in an amount stated in his report. The receivers object to each allowance thus reported, and contend that, upon the facts found, each claim should be disallowed.

The report was filed April 14, 1914, and no exceptions to it have been filed at any time, either by the receivers or any other party in interest. It therefore stands confirmed under rule 66 of the present equity rules (198 Fed. xxxvii, 115 C. C. A. xxxvii). But, notwithstanding this confirmation, no one denies that the court may decline to follow its result and disallow the claim, if satisfied that the decision of the master on the question of law upon which its allowance depends was wrong. The order of the court required the master only to "hear the parties and their evidence and report thereon to the court." The questions of law arising were, as he states in his report, nevertheless argued before him by both parties and have been dealt with by him for that reason.

The facts found being thus undisputed, the question they raise is substantially the same in each case. Having stated his reasons for the result reached in regard to the claim of Elizabeth F. Sullivan, the master has referred for them to his report upon that claim in his report upon each of the other claims. I therefore consider that claim first.

1. Elizabeth F. Sullivan contracted in writing with the defendant William S. Butler & Co., Incorporated (hereinafter called the Butler Company), to take charge of one of its departments for one year from July 3, 1912, at a salary of $4,000 for the year. The receivers in this case having been appointed on November 7, 1912, she was dismissed by them on November 9, 1912. The sum allowed her by the master is what her agreed salary would have amounted to from the time of her dismissal to July 3, 1913, less what she earned under other employment after her dismissal and before the latter date. The receivers do not dispute the amount allowed ($1,548.04), if she is entitled to any amount.

Although the receivers might have adopted the contract, they were not bound to do so; their decision not to adopt was made without delay, and in the absence of adoption by them the receivership must be regarded as having prevented the company from performing it. In the case of an uncompleted contract of employment like this, a receivership of the employer's property and business has been regarded as preventing completion by operation of law, leaving neither party further bound by it, and leaving the employé no allowable claim for damages. People v. Globe, etc., Co., 91 N. Y. 174. This case has been followed in Malcomson v. Wappoo Mills (C. C.) 88 Fed. 680, where the unperformed contract was for the sale and delivery of goods; also in Re Inman, 175 Fed. 312, a bankruptcy case, where the effect of the seller's bankruptcy upon a like contract was in question.

But, in bankruptcy, the view taken in this circuit has been, in cases like the two last cited, that the purchaser's bankruptcy is the equivalent of disenablement and repudiation on his part, which the seller may treat as a breach and thereby acquire a provable claim for his damages. Re Swift, 112 Fed. 315, 50 C. C. A. 264; Re Pettingill, etc., Co., 137 Fed. 144; Pratt v. Auto, etc., Co., 196 Fed. 495, 116 C. C. A. 261. The same effect upon the contract is given, by a recent decision of the Court of Appeals for the Seventh Circuit, to the bankruptcy of a transfer company which was under contract with a hotel to furnish service for a term of years, unexpired at the bankruptcy, and to pay for the exclusive privilege of doing so. Re Frank E. Scott Transfer Co., 216 Fed. 308, 132 C. C. A. 452 (October 1, 1913).

A receivership resulting, as this is to result, in the distribution by the court of all the defendant's property, pro rata, among its creditors, is to be regarded as having the same effect as its bankruptcy would have had upon its unperformed contracts like the one here in question. See Penna., etc., Co. v. New York, etc., Co., 198 Fed. 721, 743, 117 C. C. A. 503; in the Court of Appeals for the Second Circuit. In this case, as in that, there was no appointment of a receiver over

"an objecting corporation"; but the defendant is to be regarded, for the purposes of the present question, as having participated in bringing on the appointment. Its answer admitted the allegations of the bill. Its consent is recited in the decree making the appointment. See Re Wm. S. Butler & Co., 207 Fed. 705, 708, 711, 125 C. C. A. 223.

In People v. Globe Ins. Co., to which reference has been made above, the receiver's appointment was in proceedings by the state to dissolve and wind up the defendant corporation, on whose part no participation appeared.

If the receivership, like bankruptcy, enables this employé to treat the contract as broken by the receivers' appointment and rely upon her right to damages sustained by the breach, as she does by her proof of claim, the only question is as to the provability of such a claim in proceedings like these.

Such a claim for damages may not be provable in bankruptcy, under the present act. Act July 1, 1898, c. 541, 30 Stat. 544. If not, the reason must be, not that it is unliquidated at the time of the bankruptcy, but that it is at that time contingent as to its existence or its amount. So far as it is unliquidated, it may be liquidated and proved in the proceedings, if the facts permit, as was done in Re Swift. But section 63 (Comp. St. 1913, § 9647) requires a claim, in order to be provable, to be a fixed liability absolutely owing on the date of the bankruptcy, even if it be one founded on an express contract. It is held that there is no provable claim for future rent, under a lease containing only the usual covenants and conditions as to rent, unexpired at the bankruptcy, though the bankrupt tenant is thereby disenabled from performance. The reasons are that the tenant's obligation to pay arises out of his right to occupy, and creates no debt before the time agreed for payment arrives, before which time he may be discharged from it in a variety of ways. Re Roth & Appel, 181 Fed. 667, 104 C. C. A. 649, 31 L. R. A. (N. S.) 270; Slocum v. Soliday, 183 Fed. 410, 411, 106 C. C. A. 56.

Following the analogy of the decisions regarding the liability for future rent under a lease, and upon similar grounds, the more recent bankruptcy decisions upon the question have been that the bankrupt's liability to an employé under an unexpired contract of employment not adopted by the trustee, is also too contingent in its nature to be proved under the present act. See Re Inman & Co., 171 Fed. 185 (N. D. Ga., 1909); Re American Vacuum Cleaner Co., 192 Fed. 939 (N. J., 1911); Re D. Levy, etc., Co., 208 Fed. 479 (Md., 1913).

Since bankruptcy is to result in discharging the bankrupt (if he has acted in good faith) from his provable liabilities, Congress may well think it right to limit the liabilities from which he may be thus released to those which are fixed at the time of bankruptcy, as it has done in the present act. Under a former act not thus limiting them, claims under unexpired contracts with him for personal services were regarded in this court as provable. Ex parte Pollard, 2 Lowell, 411, Fed. Cas. No. 11,252.

But for the purposes of a distribution to be made as the result of receivership proceedings in equity such as these, liabilities from which

the debtor may be discharged under the Bankruptcy Act are not the only liabilities to be considered. Claims, immature or contingent at the time of bankruptcy, if such that their worth or amount can be determined by recognized methods of computation, as of some date within the time limited for the presentation of claims by the court and without hindering expeditious administration, and if of a nature such as equitably entitle them to share in the distribution, are no less entitled to recognition, upon equitable principles, than are fixed liabilities absolutely owing at the institution of the proceedings. The Court of Appeals for the Second Circuit has, in Pennsylvania Steel Co. v. New York, etc., Co., 198 Fed. 721, 739, 740, 117 C. C. A. 503, after careful consideration of the questions involved, thus allowed damages for breach of an unexpired contract, whereby the railroad company in receivership had granted, for 20 years, the exclusive right of moving express matter over its lines, and agreed to furnish cars therefor, in consideration of a percentage of the gross earnings, to be proved against the fund for distribution. This decision, in the absence of any to the contrary in this circuit, is to be regarded as controlling so far as it applies.

In Ex parte Pollard, above referred to, Judge Lowell declined to regard such a claim as this as contingent. A different view upon this question appears to have been taken in the above-cited decisions under the present Bankruptcy Act. But that the amount of damages for the breach of such a contract is, at any rate, capable of being determined by recognized methods of computation, no doubt was entertained, and it is believed that there can be no such doubt. If there had been no receivership, but the Butler Company had discharged the employé without sufficient reason on the same day, there would have been no difficulty, in a suit by her for damages, as to their assessment. In this and in the similar cases below mentioned the agreed period of employment had not long to run. They all expire before any decree of distribution could be reached, and the ascertainment of damages involves comparatively little speculation regarding the future.

I must therefore agree with the master upon the question of law presented and approve the allowance made by him.

2. Agnes Murphy was employed by the Butler Company in August, 1912, under a written contract, as assistant buyer in its store, at $20 per week for one year from August 26, 1912. She was discharged by the receivers December 6, 1912, and the salary she would have received under her contract to August 26, 1913, less what she was able to earn meanwhile in other employment, amounts to $380, which the master has allowed. This allowance is approved, for the same reasons as in the case of the claim first considered above.

3. James A. Gagnon accepted employment by the Butler Company as buyer for its shoe department, offered him in a letter dated July 8, 1912, from its general manager, for two years, at $15,000, provided he did $1,000,000 business within that time; at $12,000, if the business he did failed to reach that amount. There were other terms and conditions, which need not be stated here. He began work under this agreement July 9, 1912. He was paid off and discharged by the re-

ceivers November 9, 1912. His agreed salary to July 9, 1914, a date subsequent to the filing of the master's report, though prior to the date of this decision, less what he earned or might have earned meanwhile in other employment, amounts to $6,736.12, which the master has allowed. The allowance is confirmed, for the same reasons as above; it not being suggested that anything has occurred since the report was filed which requires a change in the amount reported.

4. John N. Jowett was employed by the Butler Company for one year from July 1, 1912, at a salary of $10,000 per year, under a written contract, as buyer and manager of its wholesale millinery department. He began his employment July 1, 1912, and was discharged by the receivers eight days after their appointment on November 7, 1912. $3,168.51 is reported by the master as the difference between his salary under the contract to July 1, 1913, and what he earned under other employment meanwhile. For the same reasons as above, this allowance is also approved.

Decrees may be entered allowing the above claims for the respective amounts above stated.

In re TANCREL.

(District Court, E. D. Pennsylvania. November 8, 1915.)

ALIENS ⟹66—NATURALIZATION—MERCHANT SEAMEN.

An alien seaman, who has served three years on board of a merchant vessel of the United States subsequent to his declaration of intention to become a citizen, and who produces his certificate of discharge and good conduct during that time, together with the certificate of his declaration of intention, is by the terms of Rev. St. § 2174 (Comp. St. 1913, § 4357), entitled to admission as a citizen without further proof.

[Ed. Note.—For other cases, see Aliens, Cent. Dig. § 130; Dec. Dig. ⟹66.]

In the matter of the application of Mark Gabriel Tancrel for admission to citizenship. On objections of United States. Objections overruled, and applicant admitted.

Thos. B. Shoemaker, Chief Naturalization Examiner, for the United States.

Mark Gabriel Tancrel, pro se.

DICKINSON, District Judge. The application is based upon the provisions of section 2174 of the Revised Statutes. The applicant stands upon his petition, unsupported by other evidence than "the production of his certificate of discharge and good conduct" (during the term of his service in the merchant marine), "together with the certificate of his declaration of intention to become a citizen," and his own oath.

The objection urged by the Bureau of Naturalization is to the effect that the conditions of naturalization apply to the applicant, except that

service on board a merchant ship for three years after the filing of his declaration is accepted as the equivalent of residence. This leaves the fourth condition enumerated in the act to be still applicable (except as to residence), and in consequence the testimony of two witnesses, in addition to the oath of the applicant, is required to establish all the facts (except residence), and the names and residences of the witnesses must be posted.

The objection is in accord with the general purposes of the naturalization law, and the object in excepting from some of its provisions this favored class. The law, therefore, might have been made to conform to the grounds of this objection. Congress, however, has declared its will to be otherwise, and that the certificate of discharge, following a declaration of intention, admits the applicant to citizenship. Section 2174 lays upon the courts the command of Congress that the applicant "shall be admitted" upon the production of the certificates set forth in the act. In a statement of what this applicant has done, we have paraphrased the very language of the act of Congress. This language exactly fits the facts of the case. The command follows that upon this state of facts he "shall be admitted." We have no warrant to disregard this command.

The view taken in no way conflicts with U. S. v. Petersen, 182 Fed. 289, 104 C. C. A. 571. The ruling there was that the procedure features of Act June 29, 1906, c. 3592, 34 Stat. 596, must be followed by applicants within the excepted classes. In the instant case, the act of 1906 was followed in these respects. The objection here confines itself to the character of the proofs which go to "satisfy" the court. We are not called upon to find the reason which moved Congress to dispense, in the case of such applicants as is the petitioner, with the testimony of two supporting witnesses. If one is looked for, however, it can be found in the nature of the employment which such applicants follow, limiting witnesses to shipmates. The certificate of discharge and good conduct is therefore made evidential. There is also the added reason of the policy of Congress to encourage service in the merchant marine.

Let the applicant be admitted upon taking the required oaths.

UNITED STATES v. CHARTER.

(District Court, N. D. Ohio, W. D. May 26, 1915.)

No. 1566.

1. POISONS ⟹2—REGULATION—STATUTORY PROVISIONS.

Opium or coca leaves, their salts, derivatives, or preparations, being exclusively foreign products, it was within the power of Congress in the interest of the general welfare to exclude their importation entirely, or to so regulate the traffic in them that their importations may be traced, as was done by Act Dec. 17, 1914, c. 1, 38 Stat. 785, and hence, to sustain the constitutionality of that act, it is not necessary to hold that it is designed to protect the revenues of the United States.

[Ed. Note.—For other cases, see Poisons, Cent. Dig. § 1; Dec. Dig. ⟹2.]

2. INDICTMENT AND INFORMATION ⟹72, 125—DUPLICITY—ALTERNATIVE ALLEGATIONS.

Act Dec. 17, 1914, relative to traffic in opium or coca leaves, etc., provides in section 2 that every person giving an order to any other person for any of such drugs shall make a duplicate of the order on a prescribed form and preserve it for two years, but that nothing therein shall apply to the dispensing or distribution of any of such drugs to a patient by a physician, dentist, or veterinary surgeon registered under that act, in the course of his professional practice, provided that such physician, etc., shall keep a record of all such drugs dispensed or distributed, showing the particulars therein specified. An indictment charged that accused gave an order to a certain person for one of such drugs, and that he failed to preserve a duplicate of the order for two years, and also failed to keep a record of the amount of the drug by him dispensed and distributed. *Held*, that this was not an attempt to plead in the alternative, nor did it plead two violations of the law, as a physician is excused from failing to keep a duplicate of the order only when he keeps a record of his dispensing, and the indictment alleged the absence of the exception, which makes the provision for the retention of the duplicate of the order unnecessary.

[Ed. Note.—For other cases, see Indictment and Information, Cent. Dig. §§ 195–199, 334–400; Dec. Dig. ⟹72, 125.]

3. POISONS ⟹4—REGULATION—STATUTORY PROVISIONS.

Act Dec. 17, 1914, § 8, provides that it shall be unlawful for any person not registered thereunder, and who has not paid the special tax therein provided for, to have in his possession or under his control any of the drugs therein specified, provided that this shall not apply to any employé of a registered person or to a nurse under the supervision of a physician, dentist, or veterinary surgeon registered thereunder, or to the possession of any of such drugs prescribed in good faith by a registered physician, dentist, or veterinary surgeon. *Held*, that this section has no relation to the failure of a registered physician to keep a duplicate of an order given by him for the prescribed drugs, or a record of the amount of any such drugs dispensed and distributed by him as required by section 2.

[Ed. Note.—For other cases, see Poisons, Cent. Dig. § 2; Dec. Dig. ⟹4.]

Dr. W. A. Charter was indicted for an offense under the Harrison Act. On application for leave to withdraw a plea of not guilty and file a motion to quash or a demurrer. Application overruled.

E. S. Wertz, U. S. Atty., of Cleveland, Ohio, and John S. Pratt, Asst. U. S. Atty., of Toledo, Ohio.

John D. De Golley, of Marion, Ohio, for defendant.

KILLITS, District Judge. The defendant is indicted under Act Dec. 17, 1914, entitled "An act providing for the registration of, with collectors of internal revenue, and to impose a special tax upon, all persons who produce, import, manufacture, compound, deal in, dispense, sell, distribute, or give away opium or coca leaves, their salts, derivatives, or preparations, and for other purposes." 38 Stat. 785, c. 1. The defendant has pleaded not guilty, and now comes requesting leave to withdraw his plea and file, first, a motion to quash, and, secondly, in case his motion is overruled, a demurrer.

These attacks upon the indictment are exhibited to the court, and we consider them and the argument upon them in determining whether leave should be granted to withdraw the plea of not guilty. Substantially, the motion and the demurrer cover the same grounds, which are to the effect that the act is unconstitutional, in that it violates provisions of the Constitution enumerated in the following order: The tenth amendment, the ninth amendment, section 9 of article 1, and the fifth amendment; that it violates the right of contract between the state of Ohio and the defendant, assumed to exist in the fact that he has been licensed to practice as a physician in this state; that it is an act actually designed to regulate the use of certain drugs, but is masquerading as one purporting to raise revenue; that it is not uniform in its character, but is intended to affect a special class of persons only, namely, physicians, dentists, veterinarians, and druggists.

[1] Some of these objections to this act answer themselves so plainly that they require no discussion. So far as the present case is concerned, we consider only that objection which assumes the act to be an attempt to exercise a police power only. We are not content to hold that the only ground upon which the constitutionality of this act can be sustained is that it is designed to protect the revenues of the United States. The indiscriminate and unrestrained use of opium, coca, and their derivatives is well known to be a great evil, gravely affecting the general welfare of the country. These are exclusively foreign products, and it is entirely within the power of Congress, in the interest of the general welfare, to exclude their importation entirely, or to so regulate the traffic in them in this country that their importations may be traced. A careful study of the act shows that the various provisions for registration, recording, etc., are effective in the tracing of the origin of a drug derived from these foreign products, to the end that infractions of the revenue laws may be ascertained. We therefore approve the general view of the law expressed by Judge Neterer in United States v. Brown, 224 Fed. 135, in Western district of Washington.

We are referred to a recent opinion by Judge Thompson, of the Western district of Pennsylvania, quashing an indictment drawn under section 8 of the law. But inasmuch as the indictment before us is drawn under an entirely separable provision of the act, neither the

holding of Judge Thompson nor many of the constitutional invalidities urged against the act by counsel in this case, are, in our judgment, applicable.

[2] Defendant is indicted under this portion of section 2:

"Every person who shall give an order as herein provided to any other person for any of the aforesaid drugs shall, at or before the time of giving such order, make or cause to be made a duplicate thereof on a form to be issued in blank for that purpose by the Commissioner of Internal Revenue, and in case of the acceptance of such order, shall preserve such duplicate for said period of two years in such a way as to be readily accessible to inspection by the officers, agents, employés, and officials hereinbefore mentioned. Nothing contained in this section shall apply—

"(a) To the dispensing or distribution of any of the aforesaid drugs to a patient by a physician, dentist, or veterinary surgeon registered under this act in the course of his professional practice only: Provided, that such physician, dentist, or veterinary surgeon shall keep a record of all such drugs dispensed or distributed, showing the amount dispensed or distributed, the date, and the name and address of the patient to whom such drugs are dispensed or distributed, except such as may be dispensed or distributed to a patient upon whom such physician, dentist or veterinary surgeon shall personally attend; and such record shall be kept for a period of two years from the date of dispensing or distributing such drugs, subject to inspection, as provided in this act."

It is charged in the indictment in each count that the defendant gave an order to a certain person for one of the prohibited drugs; that he failed to preserve a duplicate of the order for two years, as provided; and that he also failed to keep a record of the amount of the drug by him then and there dispensed and distributed. The pleader is not attempting to plead in this way two violations of the law, nor is he attempting to plead in the alternative. He rightfully construes the provisions quoted as providing that a physician is excused from failing to keep on file for inspection a duplicate of an order by him given to the patient only when he keeps a record of his dispensing, which record may be inspected as provided in the act. The pleading therefore alleges the absence of the exception which makes the provision for the retention of the duplicate of an order unnecessary.

[3] We are unable to find that any of the provisions of section 8 have a relation to a case depending upon facts such as are alleged in this indictment. The application to withdraw the plea to the indictment, that a motion to quash or a demurrer may be filed, is overruled, with exceptions.

In re BUTTE DULUTH MINING CO.

(District Court, D. Montana. September 29, 1915.)

No. 808.

1. BANKRUPTCY ⟹60—ACTS OF BANKRUPTCY—RECEIVERSHIP.
The record of a state court in a receivership suit, showing a petition against a corporation, alleging that defendant was engaged in developing and operating mines owned by it, that the work was in an experimental stage, and the actual or market value of the property unknown, but that the operations were at a loss, and that defendant owed debts, and was without money or credit, and was "wholly insolvent and unable to pay its just debts and obligations as they mature and fall due in the regular course of business," together with a finding that the allegations were true, and the appointment of a receiver, is not sufficient to show that the appointment was made "because of insolvency," within the meaning of Bankr. Act July 1, 1898, c. 541, § 3a (4), 30 Stat. 546, as amended by Act Feb. 5, 1903, c. 487, § 2, 32 Stat. 797 (Comp. St. 1913, § 9587), and to constitute an act of bankruptcy thereunder.
[Ed. Note.—For other cases, see Bankruptcy, Cent. Dig. § 80; Dec. Dig. ⟹60.]

2. BANKRUPTCY ⟹60—ACTS OF BANKRUPTCY—RECEIVERSHIP.
A receivership is not an act of bankruptcy, under Bankr. Act, § 3a (4), as amended by Act Feb. 5, 1903, § 2, unless the receiver was appointed "because of insolvency," as insolvency is defined in the Bankruptcy Act.
[Ed. Note.—For other cases, see Bankruptcy, Cent. Dig. § 80; Dec. Dig. ⟹60.]

In Bankruptcy. In the matter of the Butte Duluth Mining Company, alleged bankrupt. Petition dismissed.

McCaffery & Tyler, of Butte, Mont., for petitioning creditors.

J. A. Poore, of Butte, Mont., and E. M. Hall, of Helena, Mont., for alleged bankrupt.

BOURQUIN, District Judge. [1] The petition in these involuntary bankruptcy proceedings leaves much to be desired. But, answer filed and trial had, the petition is taken to sufficiently allege that respondent committed an act of bankruptcy, in that theretofore, because of insolvency, a receiver had been put in charge of respondent's property by a state court.

The allegation of a prior preferential payment as an act of bankruptcy is fatally defective, in that intent is not charged, and fails in proof, in that there is no evidence of intent and insolvency when the payment was made. Whether or not respondent committed the act of bankruptcy alleged—that is, whether or not the receiver was appointed because of insolvency—is left by petitioners dependent upon the record of the receivership proceedings alone.

The complaint therein charged that respondent was engaged in developing and operating copper mines and reduction works owned by it, that the whole was in an experimental stage and the actual mar-

ket or cash value thereof unknown, that the operations were at a loss, that respondent owed debts and was in default, that suits were threatened because thereof, that dissipation and unequal distribution of assets and unfair advantage in payments were imminent, and that respondent was without money or credit, and "is now and for a considerable time last past has been wholly insolvent and unable to pay its just debts and obligations as they mature and fall due in the regular course of business." The prayer was for a receiver to take charge and operate the property of respondent, to sell when feasible, to pay debts, and to dissolve and wind up respondent and distribute any residue to its stockholders. Respondent's answer admitted all the allegations of the complaint and "joins in the prayer" thereof. Thereupon the court made an order reciting that upon the pleadings and testimony heard it found all allegations of the complaint true, and appointing a receiver to take charge of and operate respondent's plant, subject to future orders.

The Bankruptcy Act, by the amendment of 1903, provides that it is an "act of bankruptcy" by any one when "because of insolvency a receiver or trustee has been put in charge of his property under the laws of a state, of a territory, or of the United States." It is to be noted that not every receivership, even though to finally administer a debtor's assets, or that results in finally administering an insolvent debtor's assets, is an act of bankruptcy, but those only are such acts as the Bankruptcy Act so declares. The act has its own definition of insolvency—the popular one—that:

"A person shall be deemed insolvent within the provisions of this act whenever the aggregate of his property * * * shall not, at a fair valuation, be sufficient in amount to pay his debts." Comp. St. 1913, § 9585.

This definition of insolvency in the original act, by familiar rules of construction, applies to the insolvency mentioned in the aforesaid "act of bankruptcy" introduced into the original act by amendment.

Nor do the words of the amendment, "under the laws of a state, of a territory, or of the United States," manifest a different intent or meaning for the term "insolvency." Rather are they words of limitation, so that a foreign receivership may not constitute an act of bankruptcy. The act contemplates that a man may be unable to pay his debts as they fall due, and yet not be insolvent. If he has property that at a fair valuation in amount equals his debts, so that, though not immediately convertible without sacrifice into money, by indulgence he may eventually so convert it and pay his debts, he is not insolvent, and cannot be adjudicated a bankrupt against his will.

"The law has made its definition of insolvency, whatever the effect may be, and has determined by that definition consequences, not only to the debtor, but to his creditors." Pirie v. Chicago, etc., Co., 182 U. S. 451, 21 Sup. Ct. 911, 45 L. Ed. 1171.

[2] And so it is held, and by what seems the better authorities, that a receivership is not an act of bankruptcy, unless created "because of insolvency," as insolvency is defined in the Bankruptcy

Act. See In re Valentine Bohl Co., 224 Fed. 685, — C. C. A. —, and cases therein cited. Therein is no inconsistency with the decision in the Exploration Co. Case, 177 Fed. 825, 101 C. C. A. 39, though there may be with detached dicta thereof.

The record of the receivership involved in the instant proceedings neither directly nor by implication makes it to appear that respondent was insolvent within the meaning of the Bankruptcy Act—that is, that the aggregate of its property at a fair valuation was not sufficient in amount to pay its debts—and so fails to show that because of insolvency as so defined a receiver was put in charge of respondent's property, and so fails to prove that respondent committed the act of bankruptcy alleged.

It is true the complaint in the receivership declares that respondent is "wholly insolvent"; but the addition to this conclusion or general statement of the specific and controlling words, "and unable to pay its just debts and obligations as they mature and fall due," and the other matter of said complaint, indicate the intent was to allege insolvency in this state's statutory sense of inability to meet current obligations, and not at all in the sense of the Bankruptcy Act.

If the evidence before the court appointing the receiver was otherwise, if therefrom it appeared and the court found that respondent was insolvent in the sense of the Bankruptcy Act, and because thereof appointed the receiver, it nowhere appears in the record, and petitioners have not undertaken to prove it by extrinsic evidence consistent with the record. The power of the state court to appoint the receiver and whether exercised for a right or wrong reason, is not material here, further than to determine whether or not the appointment was made "because of insolvency," as defined in the Bankruptcy Act; such appointment alone giving jurisdiction to adjudicate bankruptcy because thereof.

It well may be that the Bankruptcy Act should have provided for jurisdiction in bankruptcy of cases like this involved. But Congress omitted to do so, courts cannot supply the omission, and the law must be taken as it is.

The act of bankruptcy alleged not having been proven, respondent cannot be adjudicated a bankrupt, and the proceedings are dismissed.

ROSS v. QUINNESEC IRON MINING CO.

(Circuit Court of Appeals, Sixth Circuit. October 11, 1915.)

No. 2638.

1. CORPORATIONS ⟹211—SUIT BY MINORITY STOCKHOLDER—CONDITIONS PRECEDENT—SUFFICIENCY OF ALLEGATION.

A bill by a minority stockholder, seeking to set aside a contract made by the corporation, meets the requirement of equity rule 27 (198 Fed. xxv, 115 C. C. A. xxv) as to setting forth sufficient reason for not applying to the directors or stockholders of the corporation to take the desired action, where it shows that the directors by whose votes the contract was made are in complete control of the corporation through stock ownership, and are also direct beneficiaries of the contract.

[Ed. Note.—For other cases, see Corporations, Cent. Dig. §§ 814–818, 820, 821, 823, 824; Dec. Dig. ⟹211.

Rights of minority stockholders as to management of corporate affairs, see note to Wheeler v. Abilene Nat. Bank Bldg., 89 C. C. A. 482.]

2. CORPORATIONS ⟹210—STOCKHOLDER'S SUIT—PARTIES.

Where such contract was made by the corporation on behalf of subsidiary corporations of which it owns all the stock and takes all the profits earned, such subsidiary corporations are not necessary parties.

[Ed. Note.—For other cases, see Corporations, Cent. Dig. §§ 808–813; Dec. Dig. ⟹210.]

3. CORPORATIONS ⟹187—CONTRACTS BETWEEN STOCKHOLDERS—CONSTRUCTION AND DURATION.

The members of a partnership organized a number of subsidiary corporations; the stock interest of each partner therein being in proportion to his interest in the partnership, which handled their business as selling agent, receiving stated commissions therefor. On the death of one partner the partnership was renewed, his legatees taking his place therein, and in accordance with the same agreement defendant corporation was organized, its stock proportionately divided, and to it was transferred all of the stock of the subsidiary companies; the agreement providing that it should be "the absolute owner of everything hereby and in pursuance hereof conveyed to it, so that there shall be no further or other right in any of the parties, except as members" of defendant as represented in its shares of stock, and that neither of the parties should sell or dispose of any stock of defendant or interest therein during the continuance of the partnership. The agreement further provided that defendant "does and shall employ and shall operate through the said firm * * * so long as said partnership shall continue." *Held* that, on the withdrawal of some of the members from the firm, although it continued under the same name and to some extent under the same management, the agreement to employ it as managing agent for defendant and its subsidiary companies, and to pay the commissions on their business, ceased to be effective or binding on the retiring members, who by their retirement lost their proportionate interest in such commissions.

[Ed. Note.—For other cases, see Corporations, Cent. Dig. §§ 702, 703; Dec. Dig. ⟹187.]

4. CORPORATIONS ⟹316—DIRECTORS—FIDUCIARY RELATIONS TO STOCKHOLDERS—INDIVIDUAL BENEFIT FROM CONTRACT.

The majority directors of a corporation, which owned all of the stock of a number of subsidiary companies engaged in mining iron ore and related industries, in making a contract employing a partnership, of which they were also members, agent to manage the business and sell the products of all such companies at rates of commission aggregating

several hundred thousand dollars a year, occupied a fiduciary relation toward minority stockholders, and have the burden of proof to show that the contract was fair and reasonable and for the best interests of the corporation.

[Ed. Note.—For other cases, see Corporations, Cent. Dig. §§ 1401, 1402, 1404–1406, 1408, 1409, 1412–1414; Dec. Dig. ⚷316.]

Appeal from the District Court of the United States for the Northern District of Ohio; William L. Day, Judge.

Suit in equity by Parthenia Burke Ross against the Quinnesec Iron Mining Company, Price McKinney, James W. Corrigan, Fred W. Steinen, James E. Ferris, Andrew Squire, and Corrigan, McKinney & Co., a partnership. Decree for defendants, and complainant appeals. Reversed.

S. H. Tolles, of Cleveland, Ohio (Tolles, Hogsett, Ginn & Morley, of Cleveland, Ohio, and Robert McCarter, of Newark, N. J., of counsel), for appellant.

Frank H. Platt, of New York City, for appellee Burke.

Thomas M. Kirby, of Cleveland, Ohio, for appellee Squire.

Holding, Masten, Duncan & Leckie, of Cleveland, Ohio, for other appellees.

Before WARRINGTON, KNAPPEN, and DENISON, Circuit Judges.

KNAPPEN, Circuit Judge. This appeal is from a final decree on pleadings and proofs, dismissing a bill filed by a minority stockholder in the Quinnesec Iron Mining Company, seeking relief against the payment by that company to the firm of Corrigan, McKinney & Co. of commissions upon sales of iron ore and pig iron produced by the Quinnesec Company's subsidiaries.

In 1894 the copartnership of Corrigan, McKinney & Co. was formed, composed of James Corrigan, Price McKinney, and Stevenson Burke, for the sale of iron ore and pig iron produced by others. The firm gradually acquired interests in various mining properties, furnaces, coal, and other mineral lands, and engaged in mining and smelting operations on its own account, largely through other corporations formed for the purpose, in all of which corporations and in all properties acquired the respective partners held interests corresponding to their interests in the partnership, viz.: Corrigan, 40 per cent.; McKinney, 30 per cent.; and Burke, 30 per cent.—the entire business being operated through the agency of the firm. Judge Burke died in 1904, leaving one-fourth of his holdings in the firm and properties mentioned to his widow, one-fourth to his granddaughter, the complainant, and one-half to his grandson, Edmund S. Burke, Jr. Thereupon (in 1905) an agreement was made, continuing the partnership under the old name (Judge Burke's interests being represented by his widow, granddaughter, and grandson), and in connection therewith the Quinnesec Iron Mining Company was formed, and to it were conveyed all the stocks in subsidiary corporations owned by the partnership (except certain qualifying shares) and all other partnership property, except that certain boats were to be held by Corrigan, and a mining property

in Mexico by McKinney, as trustees, respectively, for the Quinnesec Company; another subsidiary furnace company being formed in connection with the general arrangement. A written agreement evidencing the situation expressly declared the Quinnesec Company to be "the absolute owner of everything hereby and in pursuance hereof conveyed to it, so that there shall be no further or other right in any of the parties, except as members of the Quinnesec Iron Mining Company as represented in its shares of stock," provided that neither of the parties "shall sell or dispose of any Quinnesec stock or interest therein during the continuance of the partnership, but will leave the general business agency of said company and the conduct of all the business of said partnership as heretofore"; and the Quinnesec Company agreed that "it does and shall employ and shall operate through the agency of said firm of Corrigan, McKinney & Co. so long as said copartnership shall continue."

The Quinnesec Company thus holds the stock of 22 subsidiaries, including several mining companies, in each of several different states (the majority operating under leaseholds or royalty), four iron furnaces, one company operating ore docks in Cleveland, two terminal railways, and an electric company and two water companies (the electric company and one water company said to be public service corporations as well), and two mines in Mexico producing gold, silver and copper. A steel plant is in course of construction at Cleveland. McKinney is the president of the Quinnesec and of each of the subsidiary companies and votes the stock of the latter at annual meetings. The entire operations of the Quinnesec and of all of its subsidiaries have been and are carried on through the business agency of the partnership, of which McKinney is now the active head. The firm acts as banker for the Quinnesec; the latter, which is not operating, carrying no bank account, and the operating subsidiaries carrying only the necessary local accounts for working purposes. All cash items, both of receipts and disbursements, relating to the Quinnesec or to any of its subsidiaries, are entered in the first instance upon the partnership books, entries being carried therefrom into the Quinnesec books, and therefrom distribution made to the proper operating subsidiary. The bank account pertaining to the entire business of the Quinnesec and its subsidiaries (except the local accounts mentioned) is carried by Corrigan, McKinney & Co. The subsidiaries pay no dividends directly; their balances, whether profit or loss, being taken over by the Quinnesec. The latter has paid dividends every year until 1911. During a portion of the year the Quinnesec has a credit cash balance in the hands of Corrigan, McKinney & Co. During the portions of the year in which borrowing is necessary, loans are made on paper of subsidiary corporations indorsed by the partnership.

Sales of iron ore are made by Corrigan, McKinney & Co., as agents, and sales of pig iron by the companies by Corrigan, McKinney & Co., agents. Customers' paper is made sometimes to Corrigan, McKinney & Co., sometimes to them as agents, sometimes to the given mining company. Ever since the Quinnesec was formed, Corrigan, McKinney & Co. have received a credit of 10 cents per ton on iron ore sold and

25 cents per ton on sales of pig iron; this commission being divided among the members of the firm in proportion to their interests therein. In 1907 Burke, Jr., retired from the firm on account of some dissatisfaction on his part, and remained out for two years, retaining, however, his interest in the Quinnesec. Corrigan died in December, 1908. Thereupon the firm was reorganized; Burke, Jr., returning, Corrigan's 40 per cent. being represented by his estate, and the other holdings being the same as in 1905. Following Corrigan's death, McKinney was given salaries as president, nominally paid by each of 12 subsidiary corporations, in the amount of $5,000 each, thus totaling $60,000. Later, by consolidation of two of the companies with others, the salary was reduced to $50,000.

In May, 1911, Burke, Jr., and complainant withdrew from the firm, whereupon McKinney, Corrigan, Jr. (who was residuary legatee of his father's estate), and Mrs. Burke reorganized on June 1, 1911, under the old firm name of Corrigan, McKinney & Co. On the next day the reorganized firm was, by action of the directors of the Quinnesec at its annual meeting, appointed sales agent of the corporation and its subsidiaries for the ensuing year, but without any commissions; actual expenses alone to be paid. In 1912, however, the Quinnesec Company, by action of its directors, appointed Corrigan, McKinney & Co. its sales agent for the following year, on the scale of commissions prevailing up to 1911. Under this action of 1912, the firm drew for the year commissions amounting to $392,357.15; its expenses being $76,743.36, leaving a net profit for the year as sales agent of $315,613.79. Of these commissions $247,558.90 was for the sale of iron ore, while $144,798.25 was for selling pig iron. Included in the commissions for handling iron ore are items amounting to $102,943.02 for ore sold by certain Quinnesec subsidiary companies to others of its subsidiaries. Mr. Squires, who came upon the Quinnesec directory a few weeks after the action of June 1, 1911 (representing Burke, Jr.), was the only director voting against the allowance of commissions for 1912. The net profits of the Quinnesec for that year were about $1,900,000 after deducting the commissions referred to. Mr. Squires' motion that a dividend upon the stock be declared was not supported. The defendants Steinen and Ferris are Quinnesec directors and employés; Ferris (the Quinnesec's secretary) being, with McKinney and Corrigan, Jr., a trustee of the estate of Corrigan, Sr. So far as appears by the record, the stockholdings in the Quinnesec are the same as when that company was organized in 1905, unless as respects a few qualifying shares.

The bill (filed on behalf of all stockholders) prays that the commission contract of 1912 be declared void, and Corrigan, McKinney & Co. required to account for their profits thereunder, and that the latter and the Quinnesec Company be enjoined from renewing that contract, or making any other similar contract involving the payment of commissions to that firm as sales agent.

[1] Before considering the merits, two objections made by defendants must be disposed of. One is that plaintiff is not entitled to maintain this action, for the reason that it does not appear that she suffi-

ciently appealed to the board of directors, or to the stockholders, if necessary. The bill, however, alleges that plaintiff has not made request of the officers and directors to bring the action "because of the fact that such request would be a useless and idle performance," and that the defendants, McKinney and associates, who made the contract and benefit by it, are in the absolute control of the affairs of the Quinnesec. The record fully sustains these allegations. The requirement of general equity rule 27 (198 Fed. xxv, 115 C. C. A. xxv) in the respect referred to was thus met. Doctor v. Harrington, 196 U. S. 579, 587, 25 Sup. Ct. 355, 49 L. Ed. 606; Delaware & Hudson Co. v. Railway Co., 213 U. S. 435, 446, 29 Sup. Ct. 540, 53 L. Ed. 862; Rogers v. N. C. & St. L. R. R. Co. (C. C. A. 6) 91 Fed. at page 307 and following and page 313, 33 C. C. A. 517; Hyams v. Calumet & Hecla Min. Co. (C. C. A. 6) 221 Fed. 529, 538, — C. C. A. —.

[2] It is also objected, but not argued, that the court has no jurisdiction to grant the relief prayed, for the reason that the subsidiary corporations whose products are sold are not made parties; several of them being corporations of states other than Ohio and over which the court below has no visitorial power. This objection is plainly without merit. The contract in question was made by the Quinnesec Company, which owns the entire capital stock of its subsidiaries and absolutely controls them. As appears from what has already been said, payments under the agency contract ultimately and equitably come directly from the Quinnesec Company, which (as well as the members of Corrigan, McKinney & Co.) is before the court, and over these defendants the court below has complete jurisdiction to enforce such decrees as it may make. L. & N. Ry. Co. v. Western Union Tel. Co. (C. C. A. 6) 207 Fed. 1, 6, 124 C. C. A. 573, and cases there cited.

[3] Turning to the merits: Defendants urge that the agreement contained in the 1905 contract, that the Quinnesec business be carried on through the firm of Corrigan, McKinney & Co., is still effective, and that the action of the Quinnesec directors in June, 1912, appointing the reorganized firm of Corrigan, McKinney & Co. sales agent upon the commissions stated, was expressly authorized by the agreement of 1905. The contention is that, although according to the strictly legal view, and in the absence of intention otherwise, the partnership of Corrigan, McKinney & Co. existing in 1905 would have been dissolved by the withdrawal of plaintiff and Burke, Jr., in 1911, the parties in making this contract had reference to the firm as known in the trade and banking world, "regardless of the membership therein from time to time, and that they intended this firm to remain agent so long as it continued to do business under the same management or as the same continuing entity," and that the firm as reorganized in 1912 was substantially the same management and the same entity.

There are authorities which recognize a modern tendency to treat a partnership for some purposes as distinct from the individuals composing it; but we think the case here is not brought within the principle of those cases, for we think an intention that the contract should be so construed does not appear. At the time the contract of 1905 was made both Corrigan and McKinney were actively connected with

the management of the business; indeed, it is said on defendant's behalf that the services of Judge Burke had been largely of an advisory and financial nature. All the holders of stock in the Quinnesec were members of the then existing firm, and their interests in that firm were identical with their stockholding interests. It was thus immaterial to the parties concerned (and a mere matter of bookkeeping) whether a portion of the profits of the Quinnesec Company's business was first divided ratably between stockholders under the name of commissions, or whether the entire distribution was by way of dividends upon stock, except that the withdrawal of the so-called commissions had at least the effect of assuring the annual return of profits to that extent to the stockholders, instead of accumulating them by way of additions to capital. That the parties had in mind that the employment of the firm was conditional upon the identity of interest as stockholders and as partners is fairly indicated, we think, by the recital in the 1905 agreement that the interests of the parties in the several companies and properties have been kept the same as their several interests in the partnership business, by the provision against the selling or disposing of stock by either party *"during the continuance of the partnership,"* by the stated purpose of the agreement that the stock should be held "in the same proportion as their several interests in said partnership," by the further provision that "there shall be no further or other right in any of the parties *except as members of the Quinnesec Iron Mining Company as represented in its shares of stock,"* by the stated purpose that "upon dissolution of the partnership there may and shall be definite ownership to the various partners or their representatives of their proportionate interests in the properties through their holdings of the Quinnesec stock," as well as by the limitation upon the Quinnesec's obligation to employ the firm *"so long as said partnership shall continue."*

It is also to be noted that the contract relied upon did not merely provide for the payment of commissions on sales of products, but transferred to the firm the entire business management of all the corporate activities of every kind. If it be assumed stockholders have power under the Ohio statutes to permanently deprive the directors of control over the ordinary management of corporate activities, surely an intention so to do must be evidenced by language more explicit than found in the agreement in question. That the parties regarded the partnership as dissolved by the withdrawal of one or more of its members plainly appears; for example, when Burke, Jr., in 1907 gave notice that he did not wish longer to remain in the firm, Corrigan wrote that "at the end of the fiscal year, May 1, 1907, the firm of Corrigan, McKinney & Co. will be dissolved by reason of your dissatisfaction and notice"; and it appears that McKinney, at least, more or less reluctantly permitted plaintiff (on Burke, Jr.'s, solicitation) to remain in the then reorganized firm. Moreover, in the new arrangement of 1907, Corrigan and McKinney divided between themselves the 15 per cent. interest formerly held by Burke, Jr., and the written agreement expressly provided that "the partnership is to continue *so long as it is mutually satisfactory."* So far as appears from the record, no new

contract was made on Burke, Jr.'s, return in 1909, except that he resumed his 15 per cent. interest surrendered to that extent by the Corrigan estate and McKinney. Again, when Burke, Jr., in 1911 notified McKinney of his determination to withdraw, McKinney, according to his testimony, said, "The firm will be dissolved as of to-day, June 1, 1911." Moreover, that the members of the reorganized firm regarded the agreement of 1905, with reference to the employment of Corrigan, McKinney & Co., as terminated, convincingly appears from the action of June 2, 1911, under which for the first time in the history of the Quinnesec Company any board action was taken for the employment of the firm, and this action expressly provided that the services be rendered "without commissions and other compensations other than the expense attending such services." While an attempt is made to explain this action consistently with the claimed continuation of the 1905 agreement, the explanation is not satisfactory. It thus appears that defendants are not in position to question the power and right of complainant and Burke, Jr., to withdraw from the firm in 1911; and it seems clear that their withdrawal ended whatever absolute right the original firm of Corrigan, McKinney & Co. may have had by virtue alone of the 1905 contract to act as business, financial, and selling agent of the corporations.

[4] The important question thus is whether the action of the Quinnesec directors in June, 1912 (and this was followed by like action in 1913), contracting with Corrigan, McKinney & Co. for the sale of iron ore and pig iron on the commissions stated, was a fair and reasonable transaction; that is to say, whether the payment of the commissions in question is under existing conditions a fair and reasonable corporate expense. As Corrigan, McKinney & Co. practically controlled the action of the board, and thus in effect were on both sides of the contract, the directors representing this control occupied a fiduciary relation toward the minority stockholders (Jackson v. Ludeling, 21 Wall. [88 U. S.] 616, 624, 625, 22 L. Ed. 492; Koehler v. Iron Co., 2 Black, 715, 17 L. Ed. 339; 3 Clark & Marshall on Corporations, at page 2289; Hyams v. Calumet & Hecla Min. Co. [C. C. A. 6] supra, 221 Fed. at page 537, — C. C. A. —, and cases there cited); and the burden is on them to show that the contract was a fair and reasonable one as respects the minority stockholders (Sage v. Culver, 147 N. Y. 241, 247, 41 N. E. 513; Harrison v. Thomas [C. C. A. 5] 112 Fed. 22, 29, 50 C. C. A. 98; Robotham v. Insurance Co., 64 N. J. Eq. 673, 710, 53 Atl. 842; Miner v. Ice Co., 93 Mich. 97, 111, 112, 53 N. W. 218, 17 L. R. A. 412; Hyams v. Calumet & Hecla Min. Co., supra, 221 Fed. at page 540, — C. C. A. —).

Plaintiff claims that there is no reason why the selling of iron ore and pig iron should not be done directly by the corporation instead of through sales agents. Defendants, on the other hand, insist that such agency is for the best interests of the corporation, because both of the acquaintance and standing of Corrigan, McKinney & Co. in the market as sellers and the necessity of using their credit in financing the corporations. An agreement under conditions existing in 1905 that the corporation should act through the business agency of the

firm as then constituted was not unnatural, and as circumstances then existed seems to have presented no element of unfairness. There was complete identity of interest between stockholders and partners. A liquidation of the firm's business was made unnecessary, a result doubtless desired by all interests. The Quinnesec Company was just organized and was practically unknown to the business world. Its capital, while substantial, was but a small fraction of its present holdings. Both Corrigan and McKinney were actively connected with the management and neither drew any salary. Conditions have since changed materially; the identity of stockholding and partnership interests has ceased; Corrigan, Sr., has died, and, so far as appears by the record, McKinney is the only member of the firm whose personal relations are of especial value to the partnership or to the corporation. Burke, Jr., who while a member of the firm seems to have been employed by it or by the corporation on a salary, has now apparently no connection with the business in any capacity except as stockholder. Since Corrigan's death McKinney has drawn salaries amounting to $50,000. The net corporate assets have increased from $2,750,000 in 1905 to nearly $17,000,000 in 1913 (taking no account of the value of leasehold interests), after paying in the 8 years nearly $3,800,000 in dividends. During the year in question the minority has not only paid 22½ per cent. of McKinney's salary of $50,000 (of which no complaint is made), but the same percentage of the net commissions of $315,000, assuming that the expenses of sales directly by the corporation would be no more than those of the firm. There is no reason to think that the expense of corporate sales direct would be any greater than through the medium of Corrigan, McKinney & Co., for the business of the firm and of the corporation is carried on in the one office, under the one supervision, and the bookkeeping apparently done by the same force of accountants. It would seem that the bookkeeping expense would be decreased, rather than otherwise, by a system of direct corporate sales and management, and no increase in any other direction has been suggested.

The firm of Corrigan, McKinney & Co. doubtless in 1905 had a good will of the selling business as distinguished from the corporation, and it is not improbable that this good will still exists to some extent, and apparently McKinney now represents that good will so far as it can be represented by one individual. But it is difficult to believe that the corporation, representing a combined output of about $17,000,000 per year, could not sell its products as advantageously in the name of the corporation or of the respective subsidiaries, through McKinney as its president, as in the name of the firm. It is quite likely that in 1905, and for some time thereafter, the use of the firm name and indorsement (although the firm as such has no capital) has made financial operations more easy, and to a limited extent that may still be true. But there seems no good reason for thinking that the corporation cannot now readily, through its present officers, raise upon its own credit (assuming that its financial condition is fully known) the sums necessary for the ordinary operation of its business, as well as the temporary loans needed for steel-plant construction. Its tem-

porary borrowings during the 8 years from 1905 to 1913 have ranged from $200,000 to $1,400,000 per year, or an annual average of about $628,000. On April 13, 1913, its cash balance in the hands of Corrigan, McKinney & Co. was $1,816,593.53, which is larger than its borrowings for any year up to that time.

The ultimate question is: Should the minority stockholders equitably be called upon to pay a proportionate part of the large commissions in question as consideration for such market and financial prestige as may result from the continued use of the firm name as sales and financial agent. Plaintiff is in no way estopped to raise this question, either by taking profits since 1905, by acquiescing in the 1907–1909 arrangement, or by the fact that the members of the present firm have refrained from building up an outside business or otherwise. The minority interests have seasonably protested against the 1912 action. The acts for which compensation is sought are plainly within the statutory powers of the corporation. Upon the record, we think the ultimate question above stated must be answered in the negative. Indeed, we think the action of 1911, dispensing with the payment of commissions, is itself a fairly cogent admission that their imposition would be inequitable. It is perhaps likely that the actuating reason for the withdrawal of plaintiff and Burke, Jr., from the firm in 1911 was dissatisfaction with the steel plant project, which involves an investment of from $6,000,000 to $7,000,000 (this might absorb net profits for four years or so from 1912), and their unwillingness to jeopardize their personal fortunes through liability on loans therefor. The refusal of the majority to pay dividends in 1912, and again in 1913 is said to be due to the policy of accumulating funds to meet such investment. But the fact that the majority may find it necessary, in order to carry the project through, to incur personal liability on loans for construction expense, does not, in our opinion, have any tendency to justify the payment to the majority of the commissions in question.

There is evidence that many mining companies sell through commission agents, and that the commissions under the contract in question are no more than usually paid commission brokers, and no more than paid Corrigan, McKinney & Co. before the 1905 reorganization. But that consideration is not decisive; for, while the majority has power to determine the question of internal policy whether to sell directly or through agents, the Quinnesec Company has never entered upon this policy dissociated from the management of the firm of Corrigan, McKinney & Co., and it by no means follows that the members of the latter firm would favor the policy of a separate selling agency, were they required to pay 77½ per cent. of such expense, and thus suffer a corresponding diversion of income. The presumption is to the contrary, not only generally, but specifically, from the fact that in 1911 the firm made the sales without compensation, instead of employing an outside agent.

That Mr. McKinney's services to the business are and have been highly valuable plaintiff freely concedes, and the record compels such concession. Indeed, its success, especially since Corrigan's death, seems largely due to his personal efforts. Whatever his individual services

are actually worth, the board of directors, of course, has power to award him by way of corporate official salary, and we see no reason why, in determining such salary, the board may not take into account the period since the 1912 contract was made, provided, in its judgment, his present salary is inadequate. But the record discloses no sufficient reason for the payment to any one of commissions on sales as such, much less that the other members of the present firm of Corrigan, McKinney & Co. should receive pay for which they are not shown to render corresponding service. If for reasons sentimental or otherwise the majority in control of the corporation prefers to continue to do business through the medium of the firm, plaintiff does not object thereto. Her objection is to the diversion of income as compensation for services performable by the corporation direct. We think she is entitled to this relief.

We may add that the propositions that the firm performs large services which ordinary sales commissions do not cover, and that certain of the subsidiary corporations pay McKinney no salary, require little consideration, in view of what has already been said. The entire of the salaries paid is regarded in equity as paid by the Quinnesec. The criticism upon payment of commissions is directed to their payment at all, upon the view that the employment of commission sales agents is not shown to be reasonably necessary under existing conditions.

It follows that the decree of the District Court should be reversed, with costs, and the cause remanded to that court, with directions to enter decree in accordance with the prayer of the bill, and to take such further proceedings therein as the case may require, not inconsistent with this opinion.

MACY v. ROEDENBECK.

In re BANK OF SULLY, IOWA.

(Circuit Court of Appeals, Eighth Circuit. September 21, 1915.)

No. 4422.

1. ASSIGNMENTS ⟹49—EQUITABLE ASSIGNMENT—BILL OF EXCHANGE—COLLATERAL HELD BY DRAWEE.

A draft issued by a bank in the usual course of business on a correspondent bank, which holds collateral to secure the drawer's account generally, does not, as between the drawer and payee, operate as an equitable assignment of any interest in such collateral.

[Ed. Note.—For other cases, see Assignments, Cent. Dig. §§ 85–98; Dec. Dig. ⟹49.]

2. BANKRUPTCY ⟹345—CLAIMS ENTITLED TO PRIORITY—TRUST FUNDS.

The fact that a bankrupt bank converted and dissipated the proceeds of a note sent to it for collection does not operate to give the owner of the note a lien upon, or right to priority of payment from, the general assets of the bankrupt, to the prejudice of its general creditors.

[Ed. Note.—For other cases, see Bankruptcy, Cent. Dig. §§ 531, 532, 534, 539, 540; Dec. Dig. ⟹345.]

⟹For other cases see same topic & KEY-NUMBER in all Key-Numbered Digests & Indexes

Appeal from the District Court of the United States for the Southern District of Iowa; John C. Pollock, Judge.

In the matter of the Bank of Sully, Iowa, bankrupt. From an order awarding priority to the claim of Herbert Roedenbeck, E. B. Macy, trustee, appeals. Reversed.

Herbert Roedenbeck filed a reclamation petition with the trustee in bankruptcy, for the purpose of impressing a trust upon the general assets of the bank in the trustee's hands. The referee allowed the claim as a prior claim, to participate with other claims of the same class against the actual cash coming into the hands of the trustee at the time the petition in bankruptcy was filed, together with any additions to that fund which may come into the hands of the trustee from the recovery of voidable preferences, and that when that fund is exhausted the balance of said claim shall be allowed as an unsecured claim against said estate, to participate in any and all dividends declared therein. A petition for review of this order of the referee was filed by said Roedenbeck, and the judge of said court thereafter reversed the decision of the referee and set aside such order and directed the trustee to make payment of the full face value of the petitioner's demand, if the assets of the estate in his hands are sufficient for such purpose. If not, then to pay the same to the extent of the assets in his hands not otherwise by law appropriated, thus impressing such trust upon the entire assets of the bank in the trustee's hands. The trustee appeals.

John E. Cross, of Newton, Iowa, for appellant.

Charles S. Bradshaw, of Des Moines, Iowa, for appellee.

Before HOOK, Circuit Judge, and YOUMANS and ELLIOTT, District Judges.

ELLIOTT, District Judge. Upon the facts, in so far as they are material, there is no controversy. Prior to April 17, 1914, the Bank of Sully, Iowa, was a copartnership, composed of Fred C. Andreas and Frank G. Sherman. Both the copartnership and the individual members thereof were thereafter, on April 30, 1914, duly adjudged bankrupts, and E. B. Macy qualified as trustee May 13, 1914.

In March, 1914, Herbert Roedenbeck, a resident of Texas, sent by United States mail, for collection, a note for $2,200, given by Emerson Sherman, which note was inclosed in a letter reading as follows:

"Inclosed find warranty deed from Herbert Roedenbeck to Emerson Sherman, of Sully, Iowa, covering the west half of section 67, T. & N. O. survey, Jefferson Co., and also abstract of title and six vendor's lien notes. Further, a promissory note of $2,200 given by Mr. Sherman, dated October 13, 1913, and due on or before March 15, 1914, drawing 7% interest from date until paid. Please surrender the deed to Mr. Sherman as soon as he has paid the amount of the note and interest and has signed the vendor's lien notes, and also surrender to us his copy of the purchase contract. Kindly send us draft for the amount of the collection, signed vendor's lien notes, and surrender purchase contract to this office."

April 17, 1914, the Bank of Sully collected the amount due on the note, $2,278.72, receiving in payment a check for the sum of $2,466, drawn by Meredith & Meredith, on the First National Bank of Newton, Iowa, payable to John H. Sherman, and by him indorsed, in blank, and delivered to the said Bank of Sully, receiving either cash or credit for the balance from the bank, the deed, abstract,

and note above referred to. On April 17, 1914, on receipt of the Meredith & Meredith check, the cashier of the Bank of Sully drew its draft on its correspondent, the Iowa National Bank of Des Moines, in favor of Theodore B. Koch & Co., Roedenbeck's agents, for $2,278.72, and inclosed the draft with its statement, as follows:

"We herewith enclose our draft, No. 2238, on Iowa National Bank, for $2,278.72, in payment of the following collections:

Emerson Sherman	$2,200.00	
Interest	78.72	
Total collected	$2,278.72	
Amount remitted		$2,278.72"

—and mailed the same to said company at Houston, Tex. This draft was, upon the receipt thereof, deposited by Roedenbeck, April 20, 1914, in the Union National Bank of Houston, Tex., forwarded by said bank to its St. Louis correspondent for collection, and from there forwarded to the Iowa National Bank of Des Moines, where it was presented, dishonored, and protested April 25, 1914. By the time the draft was returned to Roedenbeck, the Bank of Sully had closed its doors, the petition in bankruptcy having been filed against said bank on April 28, 1914, and he has never received any part of his claim against said bank therefor, though demand has been duly made.

As shown by the books of the Bank of Sully, its account with the Iowa National Bank, at the close of business April 16, 1914, was overdrawn $164.60; April 17th, $2,456.22; 18th, $2,456.60; 20th, $2,471.36; 21st, $6,144.66; 22d, $6,465.71; 23d, $6,497.73; 24th, $7,173.71; 25th, $6,492.84; 27th, $6,592.84. At the time the draft to Roedenbeck was drawn, the said Iowa National Bank held collateral of the Bank of Sully, under an arrangement that it should be in the sum of not less than $8,000, and when such draft was presented for payment on April 25th, and payment refused, such collateral amounted, above the amount of the overdraft then existing, to about $7,000, and after that date the Iowa National Bank converted sufficient of such collateral to pay its then overdraft, and thereafter returned to the trustee in bankruptcy the balance of such collateral.

When the Bank of Sully drew Roedenbeck's draft against the Iowa National Bank, its cashier supposed the Iowa National Bank would pay the draft. The Bank of Sully had been issuing drafts on said Iowa National Bank, and "sent remittances there most every day," and knew and took into consideration that it had collateral with them to secure any overdraft. The said Iowa National Bank had paid checks drawn on it by the Bank of Sully, and had not dishonored checks prior to that time. The cashier of the Bank of Sully knew its account had been overdrawn when he drew the draft in question. The Iowa National Bank had been honoring the drafts of the Bank of Sully. It had, prior to that time, called the cashier of the Bank of Sully up and told him its account was overdrawn, and he at once sent $5,000 to the bank. The Iowa National Bank

did not say that they would honor overdrafts—simply asked the Bank of Sully to send up cash and collateral security.

The Bank of Sully expected that the Iowa National Bank would permit them to overdraw enough to cover the draft to Roedenbeck, with the collateral he had with them, and the cashier of the Bank of Sully also supposed it would get other money in to remit to the Iowa National Bank. There was no agreement that the Iowa National Bank was to use the collateral, and there was no promise that it would, and no obligation to pay overdrafts of the Bank of Sully. The Iowa National Bank had never had occasion to sell or call in any of the collateral of the Bank of Sully in order to pay its account. It simply held it, and returned it to the Bank of Sully as the officers of the bank remitted for it, and the expectation of the cashier of the Bank of Sully when it issued the draft to Roedenbeck, was that the Bank of Sully would get enough remittances to the Iowa National Bank to take care of this draft and make up its overdraft.

On April 17, 1914, the check of Meredith & Meredith, for $2,466, paid to the Bank of Sully by Sherman, in payment of the Roedenbeck collection, was by the Bank of Sully stamped with the following indorsement:

"Pay to the order of any bank, banker, or trust company. All prior indorsements guaranteed. April 17, 1914.
"Bank of Sully, F. G. Sherman, Cashier."

And the same was forwarded by the Bank of Sully to the Continental & Commercial National Bank, its correspondent, for deposit to its credit, and it was so received and used by said bank, and was paid by the bank upon which it was drawn. At the beginning of business on April 17th the account of the Bank of Sully showed an overdraft at the said Continental & Commercial National Bank of Chicago, of $117.74; and the overdrafts at the close of each day until it closed its doors were as follows: 17th, $131.64; 18th, $232.89; 20th, $1,426.57; 21st, $1,460.47; 22d, $369.82; 23d, $122.82; 24th, $1,436.18; 25th, $1,534.51; 27th, $1,555.92.

From a stipulated statement of the business transacted between the Bank of Sully and the Continental & Commercial National Bank of Chicago, it appears that, on the same day that the check representing the payment of the Roedenbeck note was sent to the Chicago bank, that bank sent to the Bank of Sully, for credit, cash items aggregating $2,474.26, and charged them to the account of the Bank of Sully, Iowa. It further appears that, after crediting the Bank of Sully with the check received in payment of the Roedenbeck note and another small item, and charging the Bank of Sully with the cash items sent it for collection and credit on the same day, the account of the Bank of Sully with the Chicago bank showed an overdraft of $131.64, and the account of the Bank of Sully with the Chicago bank was overdrawn upon the close of business each day thereafter until it closed, in the sums above stated. The Bank of Sully loaned no money and received no bills payable after making the Roedenbeck collection, and no other property of any kind was

acquired by the Bank of Sully from the time they made this collection for claimant until the filing of the petition in bankruptcy.

After the close of banking hours on April 27th the bank never again opened. That evening, after the close of business, John H. Sherman and H. M. Gove, both relatives of the cashier of the bank, were present and discussed the situation, that the bank was insolvent. They were both general depositors of the bank, having money to their credit, and the former drew his check for $745, the latter drew his check for $500, and both received the amount therefor; the checks being left on the spindle and never entered on the bank's books, such books having been closed and balanced for the day. The trustee is proceeding against them to recover the proceeds of these checks from Sherman and Gove respectively. At the time the bank closed on the 27th, the cash balance was $1,671.46. After the two checks above referred to were paid by the cashier, this was reduced to $426.70, and this is the amount of cash that came into the hands of the trustee belonging to said bankrupt.

October 12, 1914, Roedenbeck filed an amended reclamation petition, issue was joined, and the referee, on the 18th day of November, 1914, duly entered an order in substance: (a) Denying and dismissing the claim of the petitioners to an equitable assignment by the bankrupt of the collateral of the Bank of Sully held by the Iowa National Bank of Des Moines, Iowa. (b) Allowing the claim of the petitioner to any and all proceeds of the said petitioner's property, the same being the proceeds of the said collection, coming into the hands of the trustee; and it was further thereupon ordered by the referee that Roedenbeck's claim be allowed as a prior claim to participate with other claims of the same class against the actual cash coming into the hands of the trustee at the time the petition in bankruptcy was filed, to wit, $426.70, together with any additions thereto which may come into the hands of the trustee from the recovery of voidable preferences. It was further ordered that, when the claim of Roedenbeck and other claims of the same class have participated therein until the said fund is exhausted, then the balance of said claim shall be allowed as an unsecured claim against the estate, to participate in any and all dividends declared.

November 20, 1914, Roedenbeck filed a petition for review of such order, predicating error on the part of the referee as follows: (1) The referee erred in denying and dismissing the petitioner's claim against certain of said assets for and on account of an alleged equitable assignment thereof. (2) Said referee erred in refusing and denying the petitioner the right to recover said claim in full out of the proceeds of the collateral of said bankrupt held by the Iowa National Bank at the time petitioner's check or draft was drawn and afterwards delivered to the trustee. (3) Said referee erred in refusing and denying the petitioner the right to recover said claim in full from the proceeds of said bankrupt estate in the hands of the trustee.

Such proceedings were had that the judge of said court on December 16, 1914, filed a decision upon such review, and on the 24th day of December, 1914, a decree was duly entered, in substance, that the claim of

Roedenbeck in the sum of $2,278.72, be allowed as a prior claim against said bankrupt estate, and the trustee was thereby ordered and directed to pay Roedenbeck the full face value of said claim from the assets of said estate, and if not paid forthwith the same to draw interest at 6 per cent. per annum from the date of such order. The trustee thereupon perfected an appeal, and the same is properly here for determination.

Appellant, by proper assignments, contends that the said decree entered on the 24th day of December, 1914, requiring the payment to Roedenbeck in full of his demand, is erroneous: (1) Because the undisputed evidence affirmatively shows there was no assignment to claimant, either equitable or otherwise, of any part of the collateral security held by the Iowa National Bank upon which the draft to claimant was drawn. (2) That the fact that the bankrupt may have converted and dissipated a trust fund in its hands, belonging to claimant, does not operate to give claimant a lien upon, nor a right to priority of payment from, the general assets of the bankrupt, to the prejudice of its general creditors and the trustee herein, when it affirmatively appears that neither the trust fund nor any of the proceeds thereof is traceable to such assets and did not in any way increase the assets coming into the hands of the trustee. (3) Because the sum of $426.70 in cash is the only money or property of the assets of the bankrupt that ever came into the trustee's hands into which the trust fund claimed by Roedenbeck or any part thereof, or any of the proceeds thereof can be traced.

[1] 1. Under the facts above stated, was there an equitable assignment to Roedenbeck of any part of the collateral security held by the Iowa National Bank, upon which the draft to him was drawn?

The mere giving of a check on an ordinary deposit account in a bank, in the usual course of business, does not amount to an equitable assignment, even though the drawer makes a deposit expressly to cover the check and the garnishment of the bank after such deposit has been made and the checks given, creates a lien upon the deposit superior to the rights of the payee. Poland v. Love, 164 Fed. 186, 91 C. C. A. 466. Upon the deposit of collateral with a bank with a contract giving the bank the right to declare any indebtedness of the depositor due and payable at once, in case of insolvency, and also the right to apply thereon any money, credits, or other property of the depositor in the hands of the bank, does not create a lien on any such funds or credits, *but merely gives the bank an option* which cannot be exercised after a receiver has been appointed for the depositor in insolvency proceedings. Corn Exchange National Bank v. Locher et al., 151 Fed. 764, 81 C. C. A. 388.

The draft drawn by the Bank of Sully upon the Iowa National Bank and forwarded to the agent of Roedenbeck was the usual and ordinary way for making remittances, and even though there had been funds in the Iowa National Bank sufficient to pay the draft at the time it was drawn, the holder thereof would have no right of action against the bank in the event the account of the drawer was overdrawn before it was presented, unless the check be accepted by the bank. Code Supp. Iowa 1907, § 3060, c. 189; Fourth Street Bank (of Philadelphia) v. Yardley, 165 U. S. 634, 17 Sup. Ct. 439, 41 L. Ed. 855; Bank of Republic v.

Millard, 10 Wall. 152, 19 L. Ed. 897; First National Bank v. Whitman, 94 U. S. 343, 24 L. Ed. 229. And it is also settled that a check drawn in the ordinary form does not, as between the maker and payee, constitute an equitable assignment pro tanto of an indebtedness owing by the bank upon which the check has been drawn. Fourth Street Bank v. Yardley, supra; Florence Mining Co. v. Brown, 124 U. S. 385, 8 Sup. Ct. 531, 31 L. Ed. 424; Laclede Bank v. Schuler, 120 U. S. 511, 7 Sup. Ct. 644, 30 L. Ed. 704.

The general doctrine of equitable assignments or liens can have no application under the facts in this case. Under this general doctrine, the Bank of Sully might have made an agreement with Roedenbeck by the terms of which a charge or claim would have been created in the nature of an assignment or lien on the collateral in the possession of the Iowa National Bank for the amount of the draft drawn, and a court of equity would have enforced such agreement. Coates v. First National Bank of Emporia, 91 N. Y. 26; Fourth Street Bank v. Yardley, supra. There is no claim here that when this draft was given there was, in addition to the draft, an agreement, either oral or written, between the Bank of Sully and Roedenbeck, by which the former assigned or agreed to assign to Roedenbeck so much of said collateral as was necessary to secure and pay the draft, and there was no agreement between the Bank of Sully and the Iowa National Bank that the Iowa National Bank would pay any overdrafts of the Bank of Sully. Therefore, upon the face of this record, it is not established, nor has it been attempted to be established, that it was the intention or agreement of the parties to the transaction that the draft drawn in payment of the Roedenbeck collection should be a lien or charge upon the collateral of said bank held by the Iowa National Bank, and we therefore conclude that there was no assignment to claimant, Roedenbeck, of any part of such collateral.

[2] 2. Does the fact that the bankrupt converted and dissipated the proceeds of this collection, belonging to Roedenbeck, operate to give Roedenbeck a lien upon or right to priority of payment from the general assets of the bankrupt, to the prejudice of its general creditors and the trustee herein?

It must be conceded that the relation of debtor and creditor never existed between Roedenbeck and the Bank of Sully. Roedenbeck was the owner of the note forwarded for collection and of the moneys collected, and it is clear that Roedenbeck could have obtained possession of the note at any time before its payment, or of the check, or of any moneys in the hands of the bank, received by the bank in payment of Roedenbeck's note. The ownership of this note and the fact that Roedenbeck was the owner of the proceeds of its collection, after the proceeds had been misapplied by the Bank of Sully, to whom it had been intrusted, did not entitle Roedenbeck to a general lien upon the assets of the trustee in bankruptcy of such bank for the value of such property. He can only follow the note, or the proceeds of the collection, so far as it can be traced in its original form, or in other forms into which it has been converted.

Where a trustee mingles trust funds and makes payments out of the common fund, there is a sufficient identification of the remainder, not

exceeding the smallest amount the fund contained subsequent to the commingling, because the legal presumption is that he regarded the law, and neither paid out nor invested in other securities or property the trust fund, but kept it sacred. Spokane County v. First National Bank of Spokane et al., 68 Fed. 979, 982, 16 C. C. A. 81; Empire State Surety Co. v. Carroll County, 194 Fed. 593, 114 C. C. A. 435; In re T. A. McIntyre Co., 185 Fed. 97, 108 C. C. A. 543; In re First State Bank, 152 Iowa, 724, 133 N. W. 355, and citations; Burgoyne v. McKillip, 182 Fed. 452, 104 C. C. A. 590; Schuyler v. Littlefield, Trustee of Brown & Co., 232 U. S. 707, 34 Sup. Ct. 466, 58 L. Ed. 806. And one for whom a bank had collected a draft before it failed is not entitled to preference over other creditors if the bank had disposed of the proceeds before the assignee came into possession. Nonotuck Silk Co. v. Flanders, 87 Wis. 237, 58 N. W. 383. And under such circumstances he is entitled to recover only the lowest balance to the credit of the collecting bank in the bank on which the check was drawn where it was deposited between the date of the deposit and the appointment of the receiver. American Can Co. v. Williams (C. C.) 176 Fed. 816; Board of Commissioners of Crawford Co., Ohio, v. Strawn, 157 Fed. 49, 84 C. C. A. 553, 15 L. R A. (N. S.) 1100.

There is no recognized ground upon which equity can pursue the proceeds of this collection, misapplied by the bankrupt, and impose upon it the character of a trust, except on the theory that the money is still the property of Roedenbeck, and if Roedenbeck is to be permitted to follow the proceeds of the collection of the note, received by the bankrupt upon the collection of the same, and recover it, it is because the property belongs to the petitioner, whether in the form which he parted with its possession or in a substituted form. Under the earlier rule petitioner would have been required to identify it as the very property which he had confided to another. The modern and more equitable doctrine permits the recovery of a trust fund from one not an innocent purchaser, and into any shape into which it may have been transmuted, *provided he can establish the fact that it is his property, or the proceeds of his property, or that his property has gone into it and remains in a mass from which it cannot be distinguished.* Spokane County v. First National Bank, supra.

This more recent doctrine follows the rule announced in Re Hallett's Estate (Knatchbull v. Hallett) 13 Ch. Div. 696, which is to the effect that, if money held by one in a fiduciary character has been paid by him to his account at his bank, the person for whom he held the money can follow it and has a charge on the balance in the banker's hands, and that if the depositor has commingled it with his own funds in the bank, and afterwards drawn out sums upon checks in the ordinary manner, he must be held to have drawn out his own money in preference to the trust money, and that if he destroyed the trust fund by dissipating it altogether, there remains nothing to be the subject of the trust; *that only so long as the trust property can be traced and followed into other property into which it has been converted, does it remain subject to the trust.* Judge Adams, now of this court, then District Judge for the

Eastern District of Missouri, after announcing the above doctrine, said:

"There is another line of authority announcing the proposition that because a trust fund, when appropriated by a trustee to his own use, swells his assets, the general estate of the trustee, when insolvency supervenes, will be impressed with a trust for the reimbursement of the cestui que trust, on the ground that such estate has been benefited to an equal amount by the trustee's breach of duty. But this rule, as I understand it, has not received the sanction of any federal court, and of but few state courts. The equity, or, rather, want of equity, of such a rule is well characterized by the Court of Appeals of New York in the case of Cavin v. Gleason, 105 N. Y. 256, 11 N. E. 504." Mercantile Trust Co. v. St. L. & S. F. Ry. Co. (C. C.) 99 Fed. 488.

The court in that case further says:

"Following the well-settled rule already stated, that the entire account with which trust funds have been commingled may be appropriated for the satisfaction of the trust, and giving the intervener the full benefit of that rule, *I am of opinion that the minimum amount found at any one time in the account of the Frisco Company must be the maximum amount of the trust fund which by any possibility can be traced into the receiver's hands.*" Mercantile Trust Co. v. St. L. & S. F. Ry. Co., supra.

We have examined the citations relied upon by claimant and find that in Nurse v. Satterlee, 81 Iowa, 491, 46 N. W. 1102, the collection was remitted by the bank to its correspondent, just as was done in the instant case, and it appears from the opinion that:

"Instead of keeping the trust fund separate and apart from other funds of the bank, it was deposited with the Council Bluffs Savings Bank, and, when the assignment was made, *there was a balance in that bank in favor of the Exchange Bank amounting to $2.000.* Under this state of facts the plaintiff is entitled to full payment."

It appears, therefore, that this money was traced and identified as a deposit in the Council Bluffs Savings Bank, and that there was an amount of cash in that bank to the credit of the insolvent bank to more than pay the claim.

In Peters v. Bain, 133 U. S. 670, at page 678, 10 Sup. Ct. 354, at page 357 (33 L. Ed. 696), it is said, in substance, that the trust resulting to the bank by reason of the wrongful or unlawful use of its funds by its officers in the purchase of property for the firm, or the several members thereof, the case divides itself into two parts: (a) Relating to property which was purchased with moneys that can be identified as belonging to the bank; and (b) to that which was bought and paid for by the firm out of the general moneys, or moneys in their possession, and which may or may not have been made up, in part, of what had been wrongfully taken from the bank.

"As to the first of these classes of property we entertain no doubt that the trust exists, and that it may be enforced by the receiver. * * * These funds were converted by them, regardless of their duty as trustees, into this *particular property, which still exists in specie.* No money was used in these purchases other than such as was taken directly from the bank for that purpose. *Under these circumstances the property stands in the place of the money used,* and it might have been reclaimed by the bank at its election any time before the rights of innocent third parties intervened. This is elementary. The receiver succeeded to the rights of the bank in this particular."

"The property in the second class, however, occupies a different position. There the purchases were made with moneys that cannot be identified as be-

longing to the bank. The payments were all, so far as now appears, from the general fund then in the possession and under the control of the firm. Some of the money of the bank may have gone into this fund, but it was not distinguishable from the rest. The mixture of the money of the bank with the money of the firm did not make the bank the owner of the whole. All the bank could in any event claim would be the right to draw out of the general mass of money, *so long as it remained money*, an amount equal to that which had been wrongfully taken from its own possession and put there. Purchases made and paid for out of the general mass cannot be claimed by the bank, *unless it is shown that its own moneys* then in the fund were appropriated for that purpose. Nothing of the kind has been attempted here, and it has not even been shown that, when the property in this class was purchased, the firm had in its possession any of the moneys of the bank that could be reclaimed in specie. To give a cestui que trust the benefit of purchases by his trustees, it must be satisfactorily shown that they were actually made with the trust funds."

In Mueller v. Nugent, 184 U. S. 1, 22 Sup. Ct. 269, 46 L. Ed. 405, the specific fund transferred by the bankrupt to his son was admittedly in his possession, and the action was by the trustee to recover the specific fund.

In Gorman v. Littlefield, 229 U. S. 19, 33 Sup. Ct. 690, 57 L. Ed. 1047, the court simply affirmed the rule of law theretofore announced in Richardson v. Shaw, 209 U. S. 365, 28 Sup. Ct. 512, 52 L. Ed. 835, 14 Ann. Cas. 981, with reference to the ownership of shares of stock of the kind theretofore purchased by the bankrupt for the claimant, and paid for, found in the possession of the bankrupt at the time of the filing of the petition, and to which claim had been made by no other person, the time for making such claim having expired, and the court thereby recognized that:

"Such shares were unlike distinct articles of personal property, differing in kind or value."

The case of Holder v. Western German Bank, 136 Fed. 90, 68 C. C. A. 554, is a simple determination of the trust character of the fund realized upon a collection, and there is nowhere in the opinion a recognition of any question as to the fact that the fund remained in the hands of the bankrupt bank. On the other hand, the court does (136 Fed. at page 92, 68 C. C. A. at page 556) recognize the rule stated in National Bank v. Insurance Co., 104 U. S. 54, 26 L. Ed. 693, where the principle announced in Knatchbull v. Hallett, 13 Ch. Div. 696, supra, is fully confirmed, as follows:

"That the bank was an agent in making the collection. When it had made the collection, it held it in trust. If it mingled it with its own funds, the trust attached pro tanto to the funds."

There is no suggestion that the trust attached to property other than the funds with which it was mixed and of which it became a part.

In Erie R. Co. v. Dial, 140 Fed. 689, 72 C. C. A. 183, the same court again considered the subject involved in Holder v. Western German Bank, supra, and determined that:

"Where the tort-feasor had mingled the property of the owner with his own, a lien would attach to the mass pro tanto."

And in 140 Fed. at page 690, 72 C. C. A. at page 185, the court says:

"We recognize that the rule only permits the following of the converted property into assets which can be traced as proceeds, and that the lien does not attach to assets in which neither the thing nor its value can be found."

In Empire State Surety Co. v. Carroll, 194 Fed. 593, at page 604, 114 C. C. A. 435, at page 446, the court recognizes the rule in the following language:

"It is indispensable to the maintenance by cestui que trust of a claim to preferential payment by a receiver out of the proceeds of the estate of an insolvent that clear proof be made that the trust property or its proceeds went into a specific fund or into a specific identified piece of property which came to the hands of the receiver, and then the claim can be sustained *to that fund or property only and only to the extent that the trust property or its proceeds went into it.*"

Special attention is called to the long list of citations following this paragraph. It may be noted that these cases fully sustain the foregoing statement of the court. The principle announced in claimant's citation of McLeod v. Evans, 66 Wis. 401, 28 N. W. 173, 214, 57 Am. Rep. 287, was directly overruled by Nonotuck Silk Co. v. Flanders, 87 Wis. 237, 58 N. W. 383, and the rule therein stated has ever since been adhered to by said court.

It follows, therefore, that the fact that the bankrupt did convert and dissipate this trust fund belonging to Roedenbeck does not operate to give him a lien upon nor a right to priority of payment from the general assets of the bankrupt. Therefore the judgment of the court, directing the payment of the full amount of the claim involved from the general assets of the estate, is erroneous.

There is no pretense in the record that the claimant traced his funds into any assets, either in cash or property, in which said funds were invested, in the hands of the trustee, other than the sum of $426.70 in cash, remaining in the bank upon the date the petition in bankruptcy was filed, and which came into the hands of the receiver. It appears affirmatively that the proceeds of claimant's collection cannot be found in any of the assets in the hands of the trustee, other than the cash above mentioned.

It follows, from these conclusions, that the order of the District Court must be reversed, with directions to enter an order that the claim of the petitioner, Roedenbeck, be allowed as a prior claim, to participate with other claims of the same class, against the actual cash coming into the hands of the trustee at the time the petition in bankruptcy herein was filed, to wit, $426.70, together with any additions thereto which may come into the hands of the trustee from the recovery of voidable preferences, and that, when the claim of Roedenbeck and other claims of the same class have participated therein until the said fund is exhausted, then the balance of said claim shall be allowed as an unsecured claim against the estate, to participate in any and all dividends declared therein.

ROSE et al. v. UNITED STATES.

(Circuit Court of Appeals, Eighth Circuit. September 21, 1915.)

No. 4392.

1. CONSPIRACY ⟹43—CONSPIRACY TO USE MAILS TO DEFRAUD—DEPOSIT OF LETTERS BY ANOTHER.

An indictment under Criminal Code (Act March 4, 1909, c. 321) § 37, 35 Stat. 1096 (Comp. St. 1913, § 10201), for conspiracy to commit an offense against the United States by devising a scheme to defraud and by using the mails in the execution of such scheme, which alleges as an overt act that defendants deposited or caused to be deposited two certain described letters in the mails, is supported by proof that defendants conspired to defraud as charged and caused another to deposit such letters in the post office; the act of such other under such circumstances being the act of defendants.

[Ed. Note.—For other cases, see Conspiracy, Cent. Dig. §§ 79, 80, 84–99; Dec. Dig. ⟹43.

Nonmailable matter, see notes to Timmons v. United States, 30 C. C. A. 79; McCarthy v. United States, 110 C. C. A. 548.]

2. CRIMINAL LAW ⟹720—TRIAL—COMMENTS OF DISTRICT ATTORNEY ON EVIDENCE.

Remarks by the District Attorney in his argument to the jury in commenting on the evidence *held* not improper.

[Ed. Note.—For other cases, see Criminal Law, Cent. Dig. §§ 1670, 1671; Dec. Dig. ⟹720.]

In Error to the District Court of the United States for the Western District of Missouri; Arba S. Van Valkenburgh, Judge.

Criminal prosecution by the United States against Marion W. Rose and others. From a judgment of conviction, defendant Rose brings error. Affirmed.

James T. Neville, of Springfield, Mo., for plaintiff in error.

William G. Lynch, Asst. U. S. Atty., of Kansas City, Mo. (Francis M. Wilson, U. S. Atty., of Kansas City, Mo., on the brief), for the United States.

Before HOOK, Circuit Judge, and YOUMANS and ELLIOTT, District Judges.

ELLIOTT, District Judge. The plaintiff in error, Marion W. Rose, hereinafter referred to as the defendant, was jointly indicted with John B. Thomas and Frank B. Warner for a violation of section 37 of the federal Penal Code. The conspiracy charged in the indictment was to commit the offense against the United States defined by section 215 of said Code (Comp. St. 1913, § 10385).

[1] It is conceded in the statement of the case made by counsel for the defendant that "the indictment is in correct form," and a recitation of the scheme to defraud as set forth therein is not necessary to a determination of the issues presented by the record. Suffice it to say that an intent was alleged on the part of the coconspirators to use the United States mails, and the overt acts alleged, to effect the object of said conspiracy, were that the conspirators did on or

about the 9th day of June, 1913, at Willow Springs, Howell county, Mo., unlawfully, knowingly, and feloniously deposit and *cause to be deposited* in the post office of the United States at that place for mailing and delivery by the post office establishment of the United States two certain letters, one addressed to the Hanover National Bank at New York City, N. Y., and the other to the Continental & Commercial National Bank at Chicago, Ill., both inclosing certain fictitious drafts and bills of lading.

The first contention of the defendant is that the court erred in refusing the following instruction:

"The court further instructs the jury that the crime which the defendants are charged with having committed consists of two branches: First, a combination or agreement between two or more of the defendants to commit an offense against the United States as hereinafter set forth; and, second, some act of one of the defendants so conspiring tending to effect the object of such conspiracy. The conspiracy charged is to commit an offense against the United States by devising a scheme to defraud and by using the mails in so doing as hereinbefore stated, which are applicable to the first branch of the crime. The acts charged to have been committed by one of the conspirators to effect the object of such conspiracy are the mailing of two certain letters, one to the Hanover National Bank of New York City and the other to the Continental & Commercial Bank of Chicago, Ill., the charge being that said letters were deposited in the post office establishment of the United States at Willow Springs, Mo. It is as necessary for the government to prove one or both of these acts of mailing these letters of one of the conspirators as it is to prove the conpiracy or combination between the parties, and although you may find from the evidence that the conspiracy was entered into between the defendants M. W. Rose and Warner to commit an offense against the United States, as in the indictment set forth, yet if you further find from the evidence that the defendant J. B. Thomas mailed, or caused to be mailed, the two letters which are charged in the indictment as the overt acts, and that he, the said J. B. Thomas, was not at the time one of the conspirators, and had not entered into such conspiracy or combination, then the necessary facts constituting the crime charged in the indictment have not been proven as to the defendant M. W. Rose, and you will find him not guilty."

The second contention is:

"That the court erred in its instruction to the jury that it might find the defendant Rose guilty, even though it found that the defendant Thomas was not one of the conspirators as charged in the indictment, and in charging the jury that, even though Thomas was not a conspirator, yet if Rose and Warner caused him to mail the letters, then that would be a causing to commit the overt act charged, and would satisfy the requirements of the statute."

These exceptions must be determined in the light of certain facts that appear undisputed upon the face of this record. The record clearly establishes the conspiracy in the terms and for the purpose stated in the indictment, by the defendants Rose and Warner. The forged drafts and bills of lading were forwarded by Warner to Rose, and by the defendant Rose forwarded to Thomas in a letter signed "Mt. View Produce Co." Thereupon Thomas wrote letters appearing in full in the record, and deposited the letters, with the fictitious drafts and bills of lading, in the post office at Willow Springs, addressed as set forth in the indictment. The record clearly showed that it was the intent and purpose of the defendants Rose and Warner that these fictitious drafts and bills of lading should be sent to

Thomas and that Thomas, through the Bank of Willow Springs of which he was president, should send the drafts and bills of lading direct to the several places where shipments were purported to be made, for collection, etc. The evidence is clear that both defendants Rose and Warner conspired and contemplated the collection of the fictitious drafts by causing Thomas to deposit the said drafts and bills of lading in the post office at Willow Springs, addressed to a bank at the place of business of the parties upon whom the fictitious drafts were drawn.

Without intending to fully review the undisputed evidence, it may be said that, upon the question of the prior relations of the defendants Rose and Warner, it appeared that Rose was a partner in the partnership of Rose & Daniels Commission Company at Willow Springs, and that Warner became an employé of that company in April, 1912, and continued until it was dissolved October 1st of the same year; that Warner became an employé of the Daniels Commission Company, owned and controlled by defendant Rose's partner and nephew, one Claude F. Daniels, at Willow Springs, and worked for it from October, 1912, until November, 1912, when it quit business; that during the time covered by the business of the Rose & Daniels Commission Company, and the Daniels Commission Company, this defendant Rose was an employé of the St. Louis & San Francisco Railway Company, working as a brakeman and conductor, running between Willow Springs and Grandin, Mo.; that further business connections were had between these two defendants, unnecessary to quote here, and from that time on numerous letters and telegrams, some of which were in code, passed between the defendants Warner and Rose, the latter being at Willow Springs or Grandin, Mo., and the former in the state of Iowa.

They met in May at St. Louis, pursuant to an arrangement through telegrams in which a code was used. In May, when the defendants Rose and Warner met in a hotel in St. Louis, they talked over the matter of forging drafts and bills of lading, and they did forge several bills of lading and drafts and invoices of shipment, and these were inclosed in a letter addressed to J. B. Thomas, care of the Bank of Willow Springs, which letter was given to and kept by Rose.

These drafts and bills of lading were made in the name of Charles Kline, who had been with the Rose & Daniels Commission Company, and the Daniels Commission Company, and later went with Warner in business at Plattville, Wis. Later in the same day the defendants Warner and Rose discussed the drafts and bills of lading which they had made out, and concluded that they were rather large, and determined to fix up others that would appear more reasonable.

Prior to this time Rose had sent to Warner certain bills of lading, which had been issued by the St. Louis & San Francisco Railway Company to the Rose & Daniels Commission Company, and the Daniels Commission Company, for the return of empty coops and egg cases. These Warner and Rose had with them at St. Louis, at the time above referred to. Warner erased all writing upon them, except the agent's name, and filled in the name of Charles Kline, shipper, and made them cover a number of barrels of butter and cases of eggs, which

purported to be consigned to certain shippers in Chicago and New York, named in the indictment herein, to which were attached drafts which they forged at the time, which forged drafts were, with the bills of lading, turned over to the defendant Rose, with the understanding between Rose and Warner that he (Rose) was to mail them somewhere on the train to J. B. Thomas, at Willow Springs, and that Thomas would send them, through the United States mail, immediately, for collection.

The defendants Rose and Warner separated, and on the 10th day of May Rose telegraphed to Warner, in substance, that nothing could be done; that the drafts and bills of lading which they had prepared at St. Louis could not be used, for the reason that Kline objected to his name being used. On the next day the defendant Rose wrote the defendant Warner a letter, in which he referred to Kline and his objections, and asked Warner to send one or two bills of lading to the bank, and that he should give the bank the power to reduce the draft in case the person to whom it was sent thought it was too high. Thereupon Warner, following the instructions from the defendant Rose, wrote a letter addressed to Thomas at Willow Springs, Mo., asking Thomas for $300, the amount which he claimed would be necessary for him to have to carry the deal with respect to the forged drafts and bills of lading.

Further communications were had between the defendants Warner and Rose with reference to this conspiracy and effecting its purpose and object, and on June 6th Rose wrote a letter to Warner, inclosing him $10, and the evidence shows that Warner used the money in getting up stationery for the fictitious Mountain View Produce Company, and thereupon, pursuant to the agreement between them, inclosed the fictitious drafts and bills of lading referred to in the indictment in a letter addressed to Rose at Grandin, Mo., and Rose on the 9th day of June acknowledged receipt thereof by letter. Thereupon, pursuant to the plan and conspiracy, defendant Warner having forged these drafts and bills of lading and sent them to defendant Rose, the drafts and bills of lading were inclosed by Rose in a letter received from Warner and addressed to J. B. Thomas, care Bank of Willow Springs. This letter to J. B. Thomas last mentioned, in which Rose inclosed the fictitious drafts and bills of lading, was as follows:

"Mt. View, Mo., June 7, 1913.

"J. B. Thomas, c/o Bank of W. S.—Dear Sir: Please find enclosed 7 drafts for collection. Please ask a wire report on each one; also please credit on acc't.

"Yours truly, Mt. View Produce Co."

At the time that Warner prepared the fictitious drafts and bills of lading and forwarded them to Rose he also wrote a letter to each of the produce men whom the defendants intended to defraud, stating that the "Mountain View Produce Company," was shipping the produce mentioned in the bills of lading. Thereafter one of the commission houses, having made inquiry with reference to a car and having been informed that no such car had been shipped, wrote a communica-

tion to the Bank of Willow Springs, and at about that time this defendant Rose wrote to the defendant Warner, and told him that this house had learned that the drafts and bills of lading were forgeries, thus showing that Rose was keeping in touch with the steps taken for the collection of the drafts.

It is clear that the entire correspondence between these defendants, and the conversations testified to, appearing in the record, showed the conspiracy, and that the forged drafts and bills of lading should be sent to Thomas, and that they would procure him to mail the drafts and bills of lading to the several places where shipments were purported to have been made, for collection. We think it cannot be seriously contended that the record fails to show the intent and purpose of the defendants Rose and Warner to deposit the drafts and bills of lading in the post office at Willow Springs, through the instrumentality of Thomas, to the end that they should be sent to the places desired, for collection.

It further conclusively appears that it was the defendant Rose that was making the arrangements with Thomas to mail the drafts for collection, and that he had knowledge, not only of the mailing, but of the lack of progress made in the collection, when the first inquiry was made. We have recited the foregoing facts simply to show that the conspiracy was formed, and the purpose of the conspiracy, and the intent and purpose to cause the fictitious drafts and bills of lading to be mailed by Thomas at the post office at Willow Springs for the purpose of collection.

There is no contention here that the conspiracy by the defendants Rose and Warner was not proven, and in considering the acts of defendant, and determining to whom the responsibility for the mailing of these letters attaches, we must apply the rule of law that that person is responsible for an act who either performs it himself or causes another to perform it at his request or by his direction; that is to say, it is not necessary, before this defendant Rose can be held responsible for whatever may legally attach thereto, that he should in person have placed the fictitious drafts and bills of lading in an envelope and himself have written or stamped the address thereon, and in person have deposited them in the mails. If he procured or caused Thomas to perform these acts for him, or by his order, the law regards his relation thereto the same as though he had himself and in person performed the acts. U. S. v. Newton (D. C.) 52 Fed. 288.

When these defendants, Rose and Warner, got together at St. Louis and planned to defraud the parties named in the indictment, in the manner set forth therein, by causing Thomas to send these fictitious drafts and bills of lading through the United States mails, and in pursuance of that plan this defendant Rose did forward these drafts and bills of lading to Thomas for collection, and pursuant to an arrangement that Thomas should send the drafts through the mails to the parties to be defrauded, the act of Thomas in mailing the drafts was the act of the defendants Rose and Warner as fully as if they had done the act of mailing themselves. Hyde v. U. S., 225 U. S. 347, 32 Sup. Ct. 793, 56 L. Ed. 1114, Ann. Cas. 1914A, 614.

Thomas may or may not have acted with knowledge, so as to be guilty himself. But the case does not turn upon that point. Where the act of mailing was done by the procurement of the defendants Rose and Warner, it is their act. Richardson v. U. S., 181 Fed. 1, 104 C. C. A. 69. It has been held that, where one sets in operation and makes use of an agency which, as he knew at the time, would, according to its established and regular course, carry the objectionable matter through the mail to the persons to whose attention he designed it to be called, he is responsible for the mailing of the objectionable matter. Demolli v. U. S., 144 Fed. 363, 75 C. C. A. 365, 6 L. R. A. (N. S.) 424, 7 Ann. Cas. 121.

The record in this case therefore justifies a finding of responsibility on the part of this defendant for mailing the letters in controversy, independent of the statute, and the allegation contained in the indictment, charging that he "caused to be deposited in the postoffice," etc. The instruction of the court complained of, in our judgment, correctly states the law with reference to the responsibility of this defendant Rose, as to what constitutes "causing them to be mailed."

Of course, if the defendant Thomas was a party to the conspiracy, his mailing the letters in the manner described was a sufficient commission of those overt acts to bind all the other parties to the conspiracy. And the trial court, we think, correctly said, in the instruction to which the last exception is taken:

> "If the defendant Thomas was not, but the defendant Rose was, a party with the defendant Warner in this conspiracy, then the fact that their plan was to send all these drafts and bills of lading in this way to go into the hands of his banker in this way, in order that he might send them out for collection in this way, by the use of the mails, would be a causing them to be mailed, which conforms to all the requirements of the statute; so that the question now of the mailing is, it would seem, sufficiently established. The only question being then who were the parties to the conspiracy who were bound and chargeable with the acts charged in the indictment."

The defendant attaches some importance to the claim that the defendant Thomas was a party to be injured by the conspiracy, and therefore that he could not be made the instrumentality by which the guilt of the conspirators was to be established. In other words, that because of the injury that was to accrue to him, his act could not be made the act of the conspirators. We can see no merit in this claim. If he was the instrumentality chosen by the coconspirators for the doing of this unlawful thing, and he actually used the United States mails, pursuant to the purpose and request of the conspirators, then the conspirators were the moving cause, and are responsible for causing the unlawful use of the mails, an act prohibited by the statute. We are of the opinion that the court committed no error in refusing the instruction requested by the defendant, or in giving the instruction excepted to by the defendant.

[2] The next contention of the defendant is that the court erred in overruling defendant Rose's objection to certain remarks made in the argument by the United States district attorney, which remarks and the record with reference thereto, are as follows:

"The question merely in this case is as to whether or not Thomas gets away. I am not going to spend any time on Mr. Rose at all. I take it that there is not a man upon the jury who has not already made up his mind as to Mr. Rose. I take it that that absolutely stands admitted with you, gentlemen, that he is guilty; that it points to his guilt by more roads than I could possibly name.

"Counsel for Defendant: We except to the remark, your honor.

"Court: Of course, I take it counsel would not want the jury to understand it stands admitted.

"United States Attorney: How?

"Court: The jury understands that is not what counsel meant and they are not so to regard it.

"United States Attorney: In using the words 'stands admitted,' gentlemen, I did not desire you to understand that he has pleaded guilty in this court. I did not desire you to understand anything except this: That the evidence in this is such that no sane man can arrive at any other conclusion, and with that I drop that feature of it. I won't discuss Mr. Rose any further. I will leave it to you to say whether or not he isn't guilty beyond a reasonable doubt, or any other kind of a doubt. I say to you in that connection, now, who is it that denies that Mr. Warner told the truth when he went on the witness stand?

"Counsel for Defendant: We except to that, your honor.

"United States Attorney: I am not referring to any one.

"Counsel for Defendant: Infringing upon the rights of the defendant and apparent in the opening statement.

"Court: Proceed with the argument.

"United States Attorney: Mr. Warner upon the witness stand stated certain matters. I repeat, who is it denies what Mr. Warner said? I am not going to discuss Rose any more. I am going to leave him with you gentlemen now, and there.

"Counsel for Defendant: We except to that remark and statement.

"Court: Proceed, proceed, Mr. District Attorney."

To which action of the court in overruling the defendant Rose's objection to the remarks the defendant at that time excepted.

The act of Congress permitting a defendant in a criminal action to appear as a witness in his own behalf, on his request, declares that his failure to request to be a witness in the case *shall not create any presumption against him.* To prevent such presumption being created, comment, especially hostile comment, upon such failure must necessarily be excluded from the jury. The minds of the jurors can only remain unaffected from this circumstance by excluding all reference to it. Wilson v. U. S., 149 U. S. 60, 13 Sup. Ct. 765, 37 L. Ed. 650. Has there in this case been a disregard of this provision?

We are of the opinion that a fair interpretation of the language of the United States attorney, together with his explanation, does not warrant the interpretation placed upon it by counsel for the defendant, and the entire statements of the United States attorney, taken together, cannot be said to be more than an argument upon his part that the evidence of the government is uncontradicted and unexplained. This, we understand, is permissible. Carlisle v. U. S., 194 Fed. 827, 114 C. C. A. 531.

Finding no merit in any of the errors assigned, judgment affirmed.

VAUGHAN et al. v. McARTHUR BROS. CO.

(Circuit Court of Appeals, Eighth Circuit. September 15, 1915.)

No. 4043.

COURTS ⟹357—REMOVAL OF CAUSE—COSTS ON REMAND—DISCRETION OF COURT.

Under the provision of Judicial Code (Act March 3, 1911, c. 231) § 37, 36 Stat. 1098 (Comp. St. 1913, § 1019), that if it appears at any time after the removal of a suit that it does not involve a controversy properly within its jurisdiction, the court shall remand the same and shall "make such order as to costs as shall be just," where, if the citizenship of the parties to a suit removed into a District Court had been as appeared by the record, that court would have had jurisdiction, but after its pendency in that court for eight years, during which time plaintiffs filed new pleadings, consented to a reference, and took testimony, they moved to remand on the ground that one of the plaintiffs was and had been from the commencement of suit a citizen of the same state as defendant, on remanding the cause, the court properly taxed the costs made therein to plaintiffs.

[Ed. Note.—For other cases, see Courts, Cent. Dig. § 938; Dec. Dig. ⟹357.]

In Error to the District Court of the United States for the Eastern District of Missouri; David P. Dyer, Judge.

Action at law by George B. Vaughan and Michael Conroy, copartners as Vaughan & Conroy, against the McArthur Bros. Company, a corporation. From an order remanding the cause to the state court, and taxing the costs made in the District Court to plaintiffs, they bring error. Affirmed.

Henry B. Davis, of St. Louis, Mo. (John A. Harrison and Charles Erd, both of St. Louis, Mo., on the brief), for plaintiffs in error.

Robert E. Collins, of St. Louis, Mo. (Stanley D. Pearce, of St. Louis, Mo., on the brief), for defendant in error.

Before SANBORN, ADAMS, and SMITH, Circuit Judges.

SMITH, Circuit Judge. This suit at law was brought in the circuit court of the city of St. Louis by George B. Vaughan and Michael Conroy, a copartnership doing business under the firm name of Vaughan & Conroy, against a corporation, McArthur Bros. Company, upon a written contract which recited that George B. Vaughan was of Kirkwood, Mo., and Michael Conroy of Buffalo, N. Y. Vaughan & Conroy agreed to do certain work as subcontractors under McArthur Bros. Company in the construction of the Hillsboro-Mitchell cut-off of the Chicago, Indianapolis & St. Louis Short Line. This suit was brought to recover approximately $20,000, alleged to be the balance due under that contract. The defendants filed a petition for removal to the federal court, alleging that George B. Vaughan was at the commencement of the suit and still was a citizen and resident of the state of Missouri and a nonresident of Illinois, and that Michael Conroy was at the time of the commencement of the suit and still was a citizen and resident of the state of New York and a nonresident of the state of Illinois, and that the de-

fendant was at the commencement of the suit and still was a corporation organized and existing under and by virtue of the laws of Illinois and was a citizen and resident of Illinois and a nonresident of Missouri and New York. The petition was in other respects in due form and accompanied by a bond. On June 2, 1905, the petition was sustained and order of removal made by the circuit court of the city of St. Louis. The petition was duly filed in the United States Circuit Court on August 1, 1905. The defendant filed answer on September 20, 1905. The plaintiffs filed reply on September 23, 1905. On October 31, 1905, and on April 23, 1906, the cause was continued generally by agreement. On May 26, 1906, plaintiffs with leave of court filed an amended reply. On September 26, 1906, the court, by consent of parties, in pursuance of a stipulation to that effect, ordered that Marion C. Early be appointed referee, with power to try all issues and report his findings thereon to the court.

Nothing further was done in open court until June 4, 1908, when, for the first time, the appearance of one of the present counsel for plaintiffs was entered. He at once filed a motion in which it was alleged that after his appointment Mr. Early qualified as referee and took some evidence, but ceased doing so, and asked for an order on the referee to proceed with said hearing or show cause why he should not. Upon this motion, on the 6th day of June, 1908, the referee was ordered to show cause by June 15, 1908. On the return day Mr. Early reported he had qualified and taken evidence for several days, when plaintiffs and defendant, through their attorneys, announced they had agreed on a plan to arbitrate the cause and requested him to suspend the further taking of testimony, which he did; that later he was notified by both plaintiffs and defendant that the controversy had been settled by arbitration, and the case would be dismissed. Upon the coming in of this report the defendant filed a motion to dismiss, and the court on June 15, 1908, ordered the same referee to hear this motion and report thereon to the court. On March 12, 1909, Mr. Early filed his report in favor of the defendant on said motion to dismiss. Plaintiffs filed exceptions on March 15, 1909. On March 19, 1909, the court overruled the exceptions and ordered the substitution of the Cleveland, Cincinnati, Chicago & St. Louis Railway as defendant, and that it pay the amount of the award of the arbitration into the registry of the court, and that the case be dismissed as to McArthur Bros. Company. On September 21, 1909, the cause was by consent of parties continued generally. On June 21, 1910, plaintiffs having made application for leave to file an amended petition, their application was denied. On September 20, 1910, and March 21 and September 26, 1911, the cause by consent of parties was continued generally. On March 19, 1912, the cause was dismissed for want of prosecution, and the next day this order was vacated and the cause reinstated and continued to the next term of court. On October 8, 1912, the plaintiffs with leave of court filed an amended petition claiming approximately $40,000. To this the defendant made answer on October 29, 1912, and the plaintiffs filed reply on November 7, 1912. On December 3, 1912, the parties stipulated that either party might use any of the evidence theretofore taken (presumably before the referee)

on the trial of the case. On April 22, 1913, the plaintiffs filed a motion to remand the case to the circuit court of the city of St. Louis upon the ground that:

"At the date of the filing and presentation of said petition [of removal] and at the time of and long before the bringing and commencement of this suit, the plaintiff Michael Conroy was and ever since has been and still is, and at all times since the commencement of this suit and ever since the presentation of said petition and the entry of said order of removal thereon has been, a citizen and resident of the state of Illinois, and that at all times herein above mentioned the defendant McArthur Bros. Company was and now is a citizen and resident of the state of Illinois"—and consequently the case was not removable.

On April 29, 1913, this motion was sustained. At the same time a motion to tax the costs to plaintiffs was submitted. On May 23, 1913, the court ordered all costs after the removal taxed to plaintiffs, except the costs of the arbitration proceedings. A writ of error was allowed upon the application of plaintiffs.

Before the act of March 3, 1875, there could be no appeal or writ of error on an order to remand a cause, such order was not a final judgment or decree in the sense which authorizes an appeal or writ of error. Railroad Company v. Wiswall, 23 Wall. 507, 23 L. Ed. 103. By the act of March 3, 1875, it was expressly provided:

"Sec. 5. That if, in any suit commenced in a Circuit Court or removed from a state court to a Circuit Court of the United States, it shall appear to the satisfaction of said Circuit Court, at any time after such suit has been brought or removed thereto, that such suit does not really and substantially involve a dispute or controversy properly within the jurisdiction of said Circuit Court, or that the parties to said suit have been improperly or collusively made or joined, either as plaintiffs or defendants, for the purpose of creating a case cognizable or removable under this act, the said Circuit Court shall proceed no further therein, but shall dismiss the suit or remand it to the court from which it was removed as justice may require, and shall make such order as to costs as shall be just; but the order of said Circuit Court dismissing or remanding said cause to the state court shall be reviewable by the Supreme Court on writ of error or appeal, as the case may be." Section 5 (18 Stat. 470, 472).

But the latter provision of this section was repealed by the act of 1887 as corrected by the act of 1888 (24 Stat. 552; 25 Stat. 433, 435); and substantially those laws in that respect were re-enacted by section 28 of the Judicial Code (Comp. St. 1913, § 1010). From that time it was uniformly held no appeal or writ of error will lie to an order to remand. Morey v. Lockhart, 123 U. S. 56, 8 Sup. Ct. 65, 31 L. Ed. 68; Sherman v. Grinnell, 123 U. S. 679, 8 Sup. Ct. 260, 31 L. Ed. 278; Richmond & Danville R. R. Co. v. Thouron, 134 U. S. 45, 10 Sup. Ct. 517, 33 L. Ed. 871; Gurnee v. Patrick, 137 U. S. 141, 11 Sup. Ct. 34, 34 L. Ed. 601; Birdseye v. Shaeffer, 140 U. S. 117, 11 Sup. Ct. 885, 35 L. Ed. 402; Chicago, St. Paul, Minneapolis & Omaha Ry. Co. v. Roberts, 141 U. S. 690, 12 Sup. Ct. 123, 35 L. Ed. 905; Joy v. Adelbert College; 146 U. S. 355, 13 Sup. Ct. 186, 36 L. Ed. 1003; Bender v. Pennsylvania Co., 148 U. S. 502, 13 Sup. Ct. 640, 37 L. Ed. 537; Illinois Central R. R. Co. v. Brown, 156 U. S. 386, 15 Sup. Ct. 656, 39 L. Ed. 461; Missouri Pacific Ry. v. Fitzgerald, 160 U. S. 556, 580, 16 Sup. Ct. 389, 40

L. Ed. 536; German Nat. Bank v. Speckert, 181 U. S. 405, 21 Sup. Ct. 688, 45 L. Ed. 926.

It is conceded that a writ of error would not lie to the order to remand; but the judgment as to costs was final, and plaintiffs contend and defendant denies a writ of error would lie to that portion of the judgment. In Western Coal & Mining Co. v. Petty, 132 Fed. 603, 65 C. C. A. 667, this court, then consisting of the presiding judge, Sanborn, Judge Van Devanter, now of the Supreme Court, and Judge Hook, held that the rule contended for applied in admiralty and equity, and that it was in such cases only that the uniform practice to decline to entertain an appeal or a writ of error applied, but that it did not apply in law cases. That decision so far as it goes settles the law in this court, but it is based chiefly upon the proposition that the taxation of costs in admiralty and equity is discretionary, but at law it is an absolute right.

It is contended by the defendant:

"(1) That while the taxation of costs may be final, it is incidental to an interlocutory order, and does not constitute a judgment so as to permit a writ of error or appeal. (2) That under section 5 of the act of 1875, as incorporated in section 37 of the Judicial Code, the taxation of costs in lawsuits remanded is discretionary, and that this brings them under the rule laid down in equity or admiralty cases by this court."

Under these contentions the defendant has filed a motion to dismiss the writ of error in this case. These two questions are grave, but we do not think it necessary to pass upon them, as there is another one which is decisive of this case. No question was made as to the validity of section 37 of the Judicial Code. It provides that the court "shall make such order as to costs as shall be just." What did justice require in this case? The plaintiffs in their brief contended that if the citizenship had been as recited in the contract there would have been no such diversity of citizenship as to confer jurisdiction in this case. It will be conceded for the purposes of this case that if one of the plaintiffs was a citizen of Missouri and the other of New York they could not have maintained an action in the United States Circuit Court of Missouri against the defendant, a citizen of Illinois, without its consent (Smith v. Lyon, 133 U. S. 315, 10 Sup. Ct. 303, 33 L. Ed. 635; Hooe v. Jamieson, 166 U. S. 395, 17 Sup. Ct. 596, 41 L. Ed. 1049), and that if it could not have been started in the federal court it could not be removed thereto (Ex parte Wisner, 203 U. S. 449, 27 Sup. Ct. 150, 51 L. Ed. 264), but such an action could have been maintained in the proper circuit court of Illinois (Sweeney v. Carter Oil Co., 199 U. S. 252, 26 Sup. Ct. 55, 50 L. Ed. 178).

Upon the assumption stated there is not a total absence of jurisdiction in any federal court. The defendant consented to the removal by filing the application for that purpose, and the plaintiffs by their course of proceeding consented to the jurisdiction and waived objection thereto, and the fact that a suit could not without such consent have been maintained in the circuit court of Missouri, but could have been tried in the circuit court of Illinois, would not, in view of such

consent and waiver, have been effectual to defeat the jurisdiction in Missouri. In re Moore, 209 U. S. 490, 28 Sup. Ct. 585, 52 L. Ed. 904, 14 Ann. Cas. 1164. We are therefore of the opinion that if the plaintiff Vaughan was a citizen of Missouri, and the plaintiff Conroy a citizen of New York and the defendant a citizen of Illinois, the case could not, after all the proceedings we have set out, have been remanded at all; but when it was made to appear that the plaintiff Conroy and the defendant were both citizens of the same state, Illinois, the motion to remand had to be sustained, but the plaintiffs presumptively knew all the time that the plaintiff Conroy was a citizen of Illinois, and yet from June 2, 1905, to April 22, 1913, nearly eight years, they never called that fact to the attention of the court. In the meantime they were filing pleadings, agreeing in writing to the appointment of a referee, whose personal fee alone amounted to $250, and the stenographer's fee amounted to $179.40, and many other costs were piled up, and then they insist that all these costs, having been made wholly useless by their motion to remand, should be taxed to the defendant. In Josslyn v. Phillips (C. C.) 27 Fed. 481, Hon. Henry D. Brown, then District Judge, but afterwards Supreme Judge, said:

"In ordinary cases, these [the clerk's fees for filing the transcript] would be the only costs to which the language of the act would attach, as the *motion to remand is usually made before any further proceedings are taken in the Circuit Court.*"

It is true that in several cases cited by the plaintiffs (Walker v. Collins, 167 U. S. 57, 17 Sup. Ct. 738, 42 L. Ed. 76; Cates v. Allen, 149 U. S. 451, 13 Sup. Ct. 883, 977, 37 L. Ed. 804; Martin v. Snyder, 148 U. S. 663, 13 Sup. Ct. 706, 37 L. Ed. 602; Torrence v. Shedd, 144 U. S. 527, 12 Sup. Ct. 726, 36 L. Ed. 528), and numerous other cases, the whole costs have been ordered taxed to the party removing, and doubtless such order was justified by the facts then before the court. But if Congress thought cases should only be dismissed at plaintiff's costs, and only remanded at the cost of the party removing, why did it not say so, instead of saying the court "shall make such order as to costs as shall be just." Up to the passage of this act there was no authority for the taxation of costs at all upon sustaining a motion to remand. Nashville v. Cooper, 6 Wall. 247, 18 L. Ed. 851. To avoid this rule section 5 of the act of 1875 was passed. Mansfield Coldwater & Lake Michigan Ry. Co. v. Swan, 111 U. S. 379, 4 Sup. Ct. 510, 28 L. Ed. 462. Congress meant just what it said when it directed the costs should be taxed as might be just, and there is no reason to believe that it meant in all cases of remand they should be taxed to the party removing. Peper v. Fordyce, 119 U. S. 469, 7 Sup. Ct. 287, 30 L. Ed. 435; Egerton v. Starin (C. C.) 91 Fed. 932; Hunt v. Howes, 74 Fed. 657, 21 C. C. A. 356; Ferguson v. Ross (C. C.) 38 Fed. 161, 3 L. R. A. 322. If that had been what it had meant, it would have said so.

There is substantially no part of the evidence taken in the court below preserved in the transcript. No question is presented as to a division of the costs, and we cannot say from the record that it is not

just to tax all the costs after removal, except the cost of arbitration, to the plaintiffs, but there is considerable in the record tending to show that that order was just.

It follows that the judgment is affirmed.

WHEELER v. HARTFORD LIFE INS. CO., OF HARTFORD, CONN.

(Circuit Court of Appeals, Eighth Circuit. September 27, 1915.)

No. 4277.

INSURANCE ⟹85—REVOCATION OF AGENCY—BREACH OF CONTRACT.

A contract of agency by which a life insurance company appointed a general agent for certain territory, to be paid by commissions on the premiums collected on policies secured by him, in the absence of any provision for a fixed term is one terminable at will, notwithstanding a provision for its termination on notice, and the fact that the company ceased to do business in such territory did not constitute a breach of the contract for which the agent can recover damages.

[Ed. Note.—For other cases, see Insurance, Cent. Dig. § 115; Dec. Dig. ⟹85.]

In Error to the District Court of the United States for the District of Minnesota; Page Morris, Judge.

Action at law by Albert M. Wheeler against the Hartford Life Insurance Company of Hartford, Conn. Judgment for defendant, and plaintiff brings error. Affirmed.

J. W. Crane, of Minneapolis, Minn., for plaintiff in error.

Edward P. Sanborn, of St. Paul, Minn., for defendant in error.

Before CARLAND, Circuit Judge, and LEWIS and BOOTH, District Judges.

BOOTH, District Judge. Action for damages based upon an alleged breach of a written contract of agency between the plaintiff in error, plaintiff below, a citizen of Minnesota, and the defendant in error, defendant below, a corporation of the state of Connecticut. The contract in controversy was entered into June 1, 1912, between the plaintiff and defendant, and became effective July 1, 1912. By its terms the plaintiff was constituted general agent of the defendant, for the purpose of soliciting applications for life insurance in the defendant company, and having as his territory the state of Minnesota. Plaintiff entered upon his duties as such agent on or about July 1, 1912, and continued in defendant's employ until about the middle of February, 1913. During that time he collected the first year premiums upon all policies which were written by him, and retained his commissions thereon. No renewal premiums were due the company on said policies when plaintiff ceased to act as agent for defendant, and none would become due until July, 1913, and then only in case of renewals actually made. On January 6, 1913, defendant entered into a contract with the Missouri State Life Insurance Company of

St. Louis, Mo., by which contract defendant reinsured its old-line, level premium, legal reserve policies with the last-named company. On January 7, 1913, and again on January 21, 1913, the defendant company wrote to the plaintiff, notifying him of said contract of reinsurance with the Missouri company, and that the contract would go into effect upon its approval by the insurance commissioners of Connecticut and Missouri. The contract of reinsurance was approved by the insurance commissioners of the two states mentioned on February 17, 1913. On March 1, 1913, the defendant's license to do business in the state of Minnesota expired, and on that day it ceased to do business in that state.

Shortly before February 17, 1913, the plaintiff ceased to take applications for the defendant, and February 20, 1913, commenced this action, demanding $7,500 damages for breach of his contract, claiming that the making and carrying out of the reinsurance contract by the defendant with the Missouri Insurance Company constituted a wrongful termination of the contract between the plaintiff and the defendant company. At the close of the evidence, on motion made by the defendant, the trial court directed the jury to return a verdict in defendant's favor. Verdict was so returned, and judgment was thereupon entered. Objection was duly made, and exception duly taken by the plaintiff's attorney.

The provisions of the contract between plaintiff and defendant, so far as material to the decision here, are as follows:

Section 8: "If this contract shall be terminated by either party for any cause whatever, the compensation which shall then have been paid to the agent, together with the amount then due him under this contract, shall be in full settlement of all claims and demands upon the company in favor of the agent under this contract, and all further compensation which a continuance of said contract might have secured to him, shall be waived and forfeited, except as herein otherwise provided."

Section 10: "During the continuance of this contract and as hereinafter provided the company will pay on policies issued on and after the date on which this contract shall become effective on applications secured by and through the agent, as full compensation for all services, and full reimbursement for all expenditures, first year and renewal commissions in accordance with the following schedule." (Schedule follows.)

Section 13: "If this contract is terminated within three years from date hereof by the death of the agent or for causes other than the violation of its conditions, the company will pay renewal commissions as provided above, less a collection charge of 2 per cent. on the premiums, for as many years as this contract shall have been in force."

Section 21: "Either party to this contract may terminate same by giving to the other party 30 days' notice in writing to that effect, and the power of the agent to collect and receive premiums shall cease with the termination of this contract."

It does not appear from the record upon what grounds the verdict was directed in favor of the defendant, but it is conceded by both parties that the trial court held that the case was controlled by the decision of this court in the case of Moore v. Security Trust & Life Ins. Co., 168 Fed. 496, 93 C. C. A. 652. Plaintiff claims that the trial court erred in thus holding, and in directing a verdict, and contends that the decision in the Moore Case does not apply, because

in that case the agency contract involved was construed to be one at will, while in the case at bar the agency contract should be construed as one for a fixed term.

The defendant contends that the action of the trial court in directing a verdict for the defendant was right: (1) Because no breach of the plaintiff's contract was shown upon the trial. (2) Because the express terms of the contract preclude any recovery in this case. (3) Because if, as the plaintiff claims, the making of the contract by the defendant with the Missouri Insurance Company terminated plaintiff's contract with the defendant, then the notice to plaintiff in writing on January 7 and January 21, 1913, was a sufficient notice under section 21 of the contract. (4) Because, even if any right of recovery under the terms of the contract accrues in favor of the plaintiff, the present action was prematurely brought.

It will not be necessary to discuss these several propositions at length or in detail, because, in our opinion, the case of Moore v. Insurance Co., supra, is decisive of the case at bar. That case involved an insurance agency contract, which, as well as the facts surrounding its inception, its performance and its termination, were all quite similar to those in the case at bar. The facts in the Moore Case were thus stated in the court's opinion:

"The contract between the defendant insurance company and its agents, the plaintiffs, was in writing, and it took effect on May 15, 1904. By the terms of that agreement the insurance company appointed the plaintiffs its agents in the state of Kansas and promised to pay them certain commissions during the continuance of their agency, and that after the termination of the contract a commission of 7½ per cent. would be paid to them on renewal premiums upon the insurance which they obtained as these premiums were collected by the company. The contract provided that the agreement of agency, with the exception of the stipulation that the commission on the future renewal premiums should be paid after its termination, should cease if the authority of the company to operate in Kansas terminated, if the agents withheld funds, policies, or receipts of the company 30 days after they should have been transmitted to it, or 30 days after they were demanded by the company, and if either party for just and reasonable cause gave 30 days' notice of its termination. It contained no stipulation that the insurance company would continue the appointment of the agents, or that the plaintiffs would continue to serve as agents, for any length of time. * * * In September, 1906, the defendant made a contract with the Pittsburg Life & Trust Company whereby it turned over to that company all its business and property and disabled itself from continuing in the business of life insurance and from collecting the future renewal premiums upon insurance secured by the plaintiffs, which insurance amounted to more than $1,000,000, and it notified the plaintiffs of this fact and that the contract of agency was terminated. The present worth of the plaintiffs' commission on the future renewal premiums upon this insurance was $18,792.60, and they had expended $8,370 in the promotion of the defendant's business during the agency in reliance upon reimbursement from its continuance. Upon these alleged facts the plaintiffs demand judgment for $27,162.96."

In reference to the facts thus stated the court said:

"It is a general and indisputable rule of law that the principal may revoke and the agent may renounce the latter's appointment at will and at any time, without committing any breach of the contract of agency and without incurring any liability for damages. There are exceptions to this rule, as where the agent acquired an interest, not in the fruits or profits of the thing,

but in the thing itself which is the subject-matter of the agency. Hunt v. Rousmanier, 8 Wheat. 175, 203, 5 L. Ed. 589. But the agents acquired no such interest in this case, and it is useless to consider or discuss this or other exceptions that are equally inapplicable. In view of the general rule, which has been stated, parties who intend that their contracts of agency shall exist for definite times embody in their contracts express provisions that they shall continue for specified terms, and the absence of such a provision in a contract of agency raises a strong presumption that it was an agency at will."

The court in answer to the contention of counsel in that case:

"That the provisions of this contract that it should terminate (1) 30 days after the agents failed to transmit due or demanded funds, policies, or receipts; (2) when the authority of the company to operate in Kansas should terminate; and (3) for just and reasonable cause on 30 days' notice, show that the parties intended to agree, and, therefore, did contract by implication, that the contract of agency should be permanent"

—used the following language:

"The right to determine what risks it should accept and what it should reject, what rates it should charge, in what states it should conduct its business, and in what it should not, how long it should continue to insure lives, in view of its present and probable success or failure, and whether it should continue an unprofitable business to the ultimate loss of itself and its policy holders, or reinsure its risks in some other company and prevent greater loss, and generally to determine and carry into effect the business policy of the company, was vital to the due exercise of its corporate powers, to its continued existence, and to its success. Did the company, in view of this fact, intend by this agreement to deprive itself of this right. * * * The true answer does not seem to be doubtful. It is obvious, from the nature of the company and the surrounding facts, that it intended to reserve to itself the right at its own free will to determine what applications for insurance it should accept and what it should reject, in what states and on what terms it should conduct its insurance business, what premiums it should charge, how long it should carry on its general business, whether or not, and when, if at all, it should turn over its business to another company, reinsure its risks, and cease to do an insurance business, free from all liability to its agents for damages for so doing. This right and its free exercise were as essential to the due exercise of the corporate powers of the defendant as the right of the plaintiffs to be free from lifelong service to it was to their comfort and prosperity, and nothing less than a clear and unequivocal agreement to surrender this right or limit its exercise could convince of such an intention. There was no such agreement. The implication invoked that the contract was not terminable at will, because it contained clauses, unnecessary if it was so terminable, specifying causes for its termination, is too feeble to withstand the compelling force of the presumption that the plaintiffs could not have intended to surrender control of their own business and services for life, and the defendant could not have intended to surrender its right or to limit the exercise of its right to manage, control, continue, or terminate its business of insurance at will. The existence of this right in the defendant and its free and continuous exercise were implied in this contract of agency, and the plaintiffs took the chances of its exercise when they signed the agreement and entered upon their service under it. Willcox & Gibbs Sewing Machine Co. v. Ewing, 141 U. S. 627, 636, 637, 12 Sup. Ct. 94, 35 L. Ed. 882; In re English & Scottish Marine Ins. Co., 5 Ch. App. 737; Pellet v. Manufacturers' & Merchants' Ins. Co., 104 Fed. 502, 509, 511, 43 C. C. A. 669, 676, 678; Stier v. Imperial Life Ins. Co. (C. C.) 58 Fed. 843, 845, 846."

Counsel for plaintiff seeks to distinguish the case at bar from the Moore Case, because of the provision in section 21 that the contract might be terminated on 30 days' notice absolutely, and not merely for good cause as in the Moore Case. The distinction exists, but is not

of controlling importance. In both cases the question is whether the implication from the 30 days' termination clause overcomes the presumption mentioned and renders the agency one for a definite and fixed term, instead of one at will. The implication from the provisions for termination in the Moore Case was held to be too weak to overcome the presumption. The implication from the provision of section 21 in the plaintiff's contract is equally unavailing.

Counsel for plaintiff refers to the case of Israel v. Insurance Co., 111 Minn. 404, 127 N. W. 187, as holding that the provision in a contract of agency that it might be terminated on 30 days' notice constituted the agency one for a fixed term. We do not understand that case to so hold. The contract in the Israel Case was executed on June 25, 1902, and provided that either party might terminate the agreement 30 days after giving the other notice to that effect after May 1, 1903. There was thus a term fixed in the contract, namely, a definite period from June 25, 1902, to May 1, 1903, and thereafter an indefinite period until terminated by 30 days' notice. The character of the contract was fixed as soon as the contract was made. It was not claimed that the character of the contract had changed on May 1, 1903. Applications for insurance with notes for first year premiums had been procured by Israel. His commissions were included in the notes and would be paid when the notes were paid. It was in reference to this state of facts, and not in view of the 30 days' notice clause, that the court used the language: "The agency was fixed for a specific term." The facts in the case at bar, as above set out, are widely different, and the Israel Case is not in point.

Our conclusion is that the agency created by plaintiff's contract was one at will, and that the making of the reinsurance contract by defendant with the Missouri Insurance Company did not constitute a breach of the plaintiff's contract. It follows that the plaintiff was not entitled to recover for a breach of the contract, and that the trial court properly directed a verdict in favor of the defendant. As this disposes of the case, it is not necessary to determine whether any right or rights of action may accrue in favor of the plaintiff under sections 8 and 13 of the contract. It is sufficient to say that no such right of action had accrued at the time the present action was commenced. Moore v. Insurance Co., supra; Pellet v. Mfrs. & Mer. Ins. Co., 104 Fed. 502, 43 C. C. A. 669.

The judgment below is affirmed.

WILLIAMS et al. v. ADLER-GOLDMAN COMMISSION CO. et al.

(Circuit Court of Appeals, Eighth Circuit. September 13, 1915.)

No. 4354.

1. CREDITORS' SUIT ⚷11—NECESSITY OF PRIOR JUDGMENT—NONRESIDENCE AND INSOLVENCY OF DEBTOR.

A federal court of equity has jurisdiction of a suit by creditors to set aside a fraudulent conveyance, although they have not reduced their claims to judgment, upon allegation and proof that the debtor has left the jurisdiction and is insolvent.

[Ed. Note.—For other cases, see Creditors' Suit, Cent. Dig. §§ 46-66; Dec. Dig. ⚷11.]

2. COURTS ⚷359—FEDERAL COURTS—STATE LAWS AS RULES OF DECISION—FRAUDULENT CONVEYANCES.

Whether a conveyance is fraudulent as to creditors must be determined in a federal court by the local law.

[Ed. Note.—For other cases, see Courts, Cent. Dig. §§ 939-949; Dec. Dig. ⚷359.

State laws as rules of decision in federal courts, see notes to Wilson v. Perrin, 11 C. C. A. 71; Hill v. Hite, 29 C. C. A. 553.]

3. FRAUDULENT CONVEYANCES ⚷104—TRANSFERS INVALID—HUSBAND AND WIFE.

Under the law of Arkansas as established by decision, the conveyance by a husband to his wife of land which stood in his name at the time he contracted debts, the creditors relying on his apparent ownership, is fraudulent as to such creditors.

[Ed. Note.—For other cases, see Fraudulent Conveyances, Cent. Dig. §§ 337-344; Dec. Dig. ⚷104.]

4. COURTS ⚷347—PRACTICE UNDER EQUITY RULES—PLEADING—SET-OFF.

Allegations in an answer, intended to plead a set-off, *held* insufficient under equity rule 30 (198 Fed. xxvi, 115 C. C. A. xxvi).

[Ed. Note.—For other cases, see Courts, Cent. Dig. § 921; Dec. Dig. ⚷347.]

Appeal from the District Court of the United States for the Eastern District of Arkansas; Jacob Trieber, Judge.

Suit in equity by the Adler-Goldman Commission Company and the Arkansas Fertilizer Company against F. S. Williams and Viola M. Williams. Decree for complainants, and defendants appeal. Affirmed.

Harry H. Myers and O. D. Longstreth, both of Little Rock, Ark., for appellants.

W. E. Hemingway, G. B. Rose, D. H. Cantrell, J. F. Loughborough, and V. M. Miles, all of Little Rock, Ark., for appellees.

Before SANBORN and CARLAND, Circuit Judges, and LEWIS, District Judge.

LEWIS, District Judge. This was a general creditors' bill brought by The Adler-Goldman Commission Company and Arkansas Fertilizer Company against F. S. Williams and Viola, his wife, appellants, to

adjudicate complainants' claims, to set aside a conveyance of real property from husband to wife as fraudulent, to subject that property to the payment of the husband's debts, and to sell certain corporate shares put up by Williams as collateral security for his indebtedness to one of the complainants, and apply the proceeds. The pledgee was not given power to sell the shares. The decree gave the complainants the relief sought.

The property is in the state of Arkansas, Eastern District, and Williams had resided there, but he and his wife moved away and were residents and citizens of South Carolina when the bill was exhibited. The complainants were Missouri corporations.

Williams bought the lands in May, 1900, with his wife's money; but he took title in his own name and held it until August, 1911, when he made the deed to his wife which is the conveyance charged in the bill to be fraudulent.

The bill further charged, and the great weight of the evidence tended to establish, that Williams was insolvent on making the conveyance, and had no property whatsoever in Arkansas subject to levy and sale, nor elsewhere, so far as the record discloses.

[1] The principal objection made below, and again presented here, is that the bill discloses that complainants are in a position that precludes them from coming into a court of equity; that their remedy is at law, which must be first exhausted by putting their claims in judgment, and utilizing, without avail, final process thereon—judgment, execution and officer's return nulla bona.

This general rule is plain enough and well established, even statutory (R. S. U. S. § 723), but we are unable to discover how "a plain, adequate and complete remedy may be had at law" by complainants. The defendant has not pointed it out. No judgment at law could have been obtained against him. He was without the jurisdiction and insolvent.

A prior judgment at law and unavailing process are not conditions on which equitable jurisdiction is founded. They do not constitute the basis on which the right to equitable relief rests. They are rather an element in procedure and not in equitable right. The facts which they are taken to establish, by the general rule, may be made to otherwise appear, and thus exceptions to the general rule are recognized and have become as well established as the rule itself.

The main purpose of the suit was to remove the fraudulent transfer to the wife so that the lands might be applied in satisfaction of the husband's debts.

The ground for equitable relief, pleaded in the bill, is the fraudulent transfer, which the Chancellor is empowered and required to search out and remove, and which cannot be done at law.

Non-residence of the debtor and also his insolvency have each been held sufficient to dispense with prior judgment and execution at law; the first, because of the great impracticability, if not impossibility, of proceeding against the debtor in that way, and the second, because it stands for what the judgment and execution would conclusively prove.

In Case v. Beauregard, 101 U. S. 688–690 (25 L. Ed. 1004), it is said:

"But, after all the judgment and fruitless execution are only evidence that his legal remedies have been exhausted, or that he is without remedy at law. They are not the only possible means of proof. The necessity of resort to a court of equity may be made otherwise to appear. Accordingly the rule, though general, is not without many exceptions. Neither law nor equity requires a meaningless form, 'Bona, sed impossibilia non cogit lex.' It has been decided that where it appears by the bill that the debtor is insolvent and that the issuing of an execution would be of no practical utility, the issue of an execution is not a necessary prerequisite to equitable interference. * * *

"So it has been held that a creditor, without having first obtained a judgment at law, may come into a court of equity to set aside fraudulent conveyances of his debtor, made for the purpose of hindering and delaying creditors, and to subject the property to the payment of the debt due him."

In National Tube Works Co. v. Ballou, 146 U. S. 517–523, 13 Sup. Ct. 165, 166 (36 L. Ed. 1070), it is said:

"Where it is sought by equitable process to reach equitable interests of a debtor, the bill, unless otherwise provided by statute, must set forth a judgment in the jurisdiction where the suit in equity is brought, the issuing of an exection thereon, and its return unsatisfied, or must make allegations showing that it is impossible to obtain such a judgment in any court within such jurisdiction."

See, also, Lazarus Jewelry Co. v. Steinhardt, 112 Fed. 614, 50 C. C. A. 393; Talley v. Curtain, 54 Fed. 43, 4 C. C. A. 177; Tank Co. v. Varnish Co. (C. C.) 45 Fed. 7, 16.

There is abundant state authority. That non-residence creates an exception to the rule, see Pope v. S. W. & W. Co., 36 Ga. 541; Quarl v. Abbett, 102 Ind. 233, 1 N. E. 476, 52 Am. Rep. 662; Kipper v. Glancey, 2 Blackf. (Ind.) 356; Taylor v. Branscombe, 74 Iowa, 534, 38 N. W. 400; Anderson v. Bradford, 5 J. J. Marsh. (Ky.) 69; Scott v. McMillen, 1 Litt. (Ky.) 302, 311, 13 Am. Dec. 239; Earle v. Grove, 92 Mich. 285, 52 N. W. 615; Williams v. Kemper, 99 Minn. 301, 109 N. W. 242; Burnham, M. & Co. v. Smith, 82 Mo. App. 35; Weaver v. Cressman, 21 Neb. 675, 33 N. W. 478; Peay v. Morrison, 10 Grat. (Va.) 149; Farrar v. Halselden, 9 Rich. Eq. (S. C.) 331; and that insolvency may be shown otherwise than by judgment at law and execution returned nulla bona, as creating an exception to the general rule, see Sage v. Railroad Co., 125 U. S. 361, 376, 8 Sup. Ct. 887, 31 L. Ed. 694; Austin v. Morris, 23 S. C. 393; Gordon v. Worthley, 48 Iowa, 429; Moffatt v. Tuttle, 35 Minn. 301, 28 N. W. 509; Turner v. Adams, 46 Mo. 99; Bank v. Wetmore, 124 N. Y. 241, 249, 26 N. E. 548; Schofield v. Ute C. & C. Co., 92 Fed. 269, 34 C. C. A. 334.

[2] The construction and effect of the conveyance from Williams to his wife must be determined by the lex loci rei sitæ. McGoon v. Scales, 9 Wall. 23, 19 L. Ed. 545; De Vaughn v. Hutchinson, 165 U. S. 566, 17 Sup. Ct. 461, 41 L. Ed. 827; Green v. Van Buskirk, 5 Wall. 307, 18 L. Ed. 599.

[3] Williams held title to the lands for more than eleven years. During that time he treated the lands as his, and on more than one occasion represented that they were his. During that time all of the indebtedness to one of the complainants was contracted, and sub-

stantially all of the indebtedness to the other. There is evidence that the creditors relied on that apparent ownership as being true in extending credit; and the firmly established rule in Arkansas is that a conveyance from husband to wife, in such circumstances, is fraudulent as to creditors. Goodrich v. Bagnell Timber Co., 105 Ark. 90, 150 S. W. 406; Roberts v. Lumber Co., 84 Ark. 227, 105 S. W. 258; Davis v. Yonge, 74 Ark. 161, 166, 85 S. W. 90; Morris v. Fletcher, 67 Ark. 105, 111, 56 S. W. 1072, 77 Am. St. Rep. 87; Bank v. Norwood, 50 Ark. 46, 6 S. W. 323, 7 Am. St. Rep. 78.

[4] A cross-complaint appended to the answer was on motion stricken, and this is assigned as error. It counter-claimed against the Fertilizer Company. It was based on a verbal option given to Williams by one Goldman, who was a stockholder and the largest creditor of the Fertilizer Company. The terms of the option are stated thus:

"That about November, 1912, the said Goldman began pressing the company for his debt and threatened to foreclose his loan and force the company into liquidation; that in order to avert this calamity, which would entail a heavy loss on him and the other stockholders, he went to see said Goldman and represented to him that if he, the said Goldman, would forbear to press his suit for collection of his loan and give him the option to the assets of the Fertilizer Company, he would undertake to organize a new company and sell sufficient stock therein to provide funds not only to care for his, Goldman's debt, but would also put the affairs of the old company in good shape; that Goldman thereupon agreed to this plan and gave him, the said F. S. Williams, an option on all the property and assets of the Arkansas Fertilizer Company, agreeing that if he would organize another company to take over the property of the old company and secure its debts and would sell as much as One Hundred Thousand Dollars of stock in said new company, that the said Goldman would renew his debt and take stock in the new company in an amount of his holdings in the old company; while this option was not in writing, but it was made by the said Goldman to him, and he further agreed to desist pressing his debt against the company and allowed him, Williams, until June, 1913, in which to organize his new company."

This option "was agreed to and ratified by the directors of the Arkansas Fertilizer Company," and thereupon defendant "began the organization" of the Western Agricultural Company, to take over the holdings of the Arkansas Fertilizer Company. A prospectus of the Western Company is attached to the cross-complaint, showing that company to have an authorized capital of $3,000,000. There is no claim or suggestion in the cross-complaint that the Fertilizer Company or Goldman or the other stockholders of that company agreed to the plan proposed in the prospectus—the amount of capital stock, its division into common and preferred, the rate of income fixed on the preferred, etc. But Williams proceeded then to obtain "stock subscriptions in the new company, amounting to $64,000 actually sold, and had received assurances of additional stock subscriptions of $20,000, and pledges of purchase for the balance of the $100,000, which J. D. Goldman demanded he sell under his optional agreement."

These efforts cost him a large sum. The plant of the Fertilizer Company burned down. That company and Goldman refused to perform, to the defendant's great damage in several specified items. Prayer for relief: (a) That the Fertilizer Company and Goldman

make an accounting of the affairs of the Fertilizer Company, (b) judgment for money expended in efforts under option, and (c) damages for refusal to carry out option.

We think the learned District Judge did not err in striking the cross-complaint: (1) It was based on a claimed transaction with Goldman, who was not a party to the suit; (2) essential elements to a clear and definite understanding between defendant and Goldman as to what was covered by the option, and as to what should be done under it, are lacking; (3) Goldman could not bind the Fertilizer Company; (4) the pleading does not show what obligation or duty Williams definitely assumed, nor that he ever kept and complied with it, and (5) the great per cent. in number and amount of items set up in the counter-claim are for unliquidated damages and could not "be the subject of an independent suit in equity," and none of the items arise "out of the transaction which is the subject-matter of the suit." Equity Rule 30 (198 Fed. xxvi, 115 C. C. A. xxvi).

We do not find error, and the decree is affirmed.

In re JOHN W. FARLEY & CO.

FT. DEARBORN NAT. BANK OF CHICAGO et al. v. GALLAGHER.

(Circuit Court of Appeals, Seventh Circuit. October 5, 1915.)

Nos. 2204, 2205, 2258, 2263.

1. BANKRUPTCY ⟹440—REVIEW OF PROCEEDINGS—APPEAL OR PETITION TO REVISE.

A referee in bankruptcy authorized the trustee of a firm of contractors to complete a contract and to borrow money from a bank; the order providing that the bank should have a first lien and prior claim upon the property of the bankrupt, subject only to the costs of administration of the estate. On final accounting by the trustee, the referee ordered a balance in the trustee's hands after payment of fees and expenses to be paid pro rata to unpaid laborers and materialmen to the exclusion of the bank. On appeal to the District Court, it approved the referee's report as to the rights of the bank, reversed his order so far as it allowed the materialmen to prorate with the laborers, and ordered the entire fund distributed pro rata to the laborers. *Held*, that the several orders of the District Court were proceedings in bankruptcy, and not plenary, and the mode of review was by an original petition to revise and review, and not by appeal.

[Ed. Note.—For other cases, see Bankruptcy, Cent. Dig. § 915; Dec. Dig. ⟹440.

Appeal and review in bankruptcy cases, see note to In re Eggert, 43 C. C. A. 9.]

2. BANKRUPTCY ⟹348—CONTINUING BUSINESS—PRIORITY OF PAYMENT—"COSTS OF ADMINISTRATION."

The "costs of administration," to which the claim of the bank was subordinated, was not limited to court costs, but included the expenses attending the execution of those orders of the court entered with refer-

ence to the contract, and the laborers and materialmen were entitled to payment in preference to the bank.

[Ed. Note.—For other cases, see Bankruptcy, Cent. Dig. § 536; Dec. Dig. ⚷348.

For other definitions, see Words and Phrases, First and Second Series, Costs of Administration.]

3. BANKRUPTCY ⚷348—CONTINUING BUSINESS—PRIORITY OF PAYMENT.

No statutory or other special lien having been perfected, the laborers were not entitled to any preference over the materialmen.

[Ed. Note.—For other cases, see Bankruptcy, Cent. Dig. § 536; Dec. Dig. ⚷348.]

Appeal from the District Court of the United States for the Eastern Division of the Northern District of Illinois; Kenesaw M. Landis, Judge.

In the matter of John W. Farley & Co., bankrupts. To review an order of the District Court concerning the disposition of a balance in the hands of Joseph P. Gallagher, trustee, the Ft. Dearborn National Bank of Chicago and another appeal and bring petitions to review and revise. Appeals dismissed. Decree affirmed in part, and reversed in part, on the petitions to revise.

By agreement of parties the above four cases were heard together upon the record filed in No. 2205. Cases Nos. 2205 and 2263 are on appeals from the District Court. Cases Nos. 2204 and 2258 are on original petitions to review and revise. By order of court, on stipulation filed, the printing of the records in all but case No. 2205 was waived. From that record it appears that John W. Farley & Co., partners, contracted with the Universal Construction Company to dig a portion of one of the public sewers of the city of St. Louis, Mo. After completing a section of the sewer, the partnership was adjudged a bankrupt, and one Joseph P. Gallagher was elected trustee. On January 8, 1912, upon the filing of the petition of the trustee, setting out that great advantage would result to the estate were he empowered to complete the work, and asking for such power, and for power to issue receiver's certificates for the purpose of raising funds with which to prosecute the work, such authority was granted by the referee. The order of the referee provided that the trustee have leave to borrow of the Ft. Dearborn National Bank of Chicago the sum of not exceeding $10,000, for which loan said bank should have a "first lien and prior claim to every other lien or incumbrance thereon, and, subject only to the costs of administration of this estate, for such sum so loaned, together with interest from the date of said loan at the rate of 6 per cent., upon all the property, estate, assets, and effects of said bankrupts now in the possession of the trustee of this estate or hereafter to come into his possession, including the moneys due said estate on said contract and to become due thereon by reason of the carrying on of said work by said trustee in bankruptcy," and the trustee was at the same time ordered to make monthly reports of his acts in the premises. Thereafter, and on May 17, 1912, on the further request of the trustee, like leave was given the trustee to borrow a further sum of $5,000 from said bank upon like conditions, and again, on June 11, 1912, the trustee filed his petition, setting out the insufficiency of funds to complete said work by reason of floods and other drawbacks, and was authorized to borrow a further sum of $12,500 from said bank upon like terms and conditions. Thereafter, and on June 28, 1912, the trustee asked and received permission to borrow from said bank the further sum of $10,000, upon the same terms and conditions. All of said loans were completed, and the money, aggregating $37,500, was received by said trustee. Of this amount only $1,000 has been repaid.

On final accounting by the trustee, the referee found and reported a balance on hand, after marshaling all the assets and paying referee's and at-

torney's fees and expenses and stenographer fees, amounting to $6,394.65. This amount he ordered paid pro rata upon the sums due for labor and material furnished to said trustee for and used by him in the construction of said sewer, as costs of administration, to the exclusion of the claim of said bank. From this order both the bank and the labor claimants carried their several grievances to the District Court for review. That court approved the referee's report as to the rights of the bank, reversed the order of the referee so far as it allowed the materialmen to prorate with the laborers, and ordered the entire fund on hand distributed pro rata upon the labor claims, which exceeded the said sum to be distributed. To this order the bank and certain materialmen duly excepted. The bank and one Gruner & Bros. Lumber Company, a materialman, having a claim for $2,635.64, bring said matters to this court.

E. Carl Tourje, of Chicago, Ill., for appellant Ft. Dearborn Nat. Bank.

Nicholas R. Jones, of Chicago, Ill., for appellant Philip Gruner & Bros. Lumber Co.

George W. Brown, of Chicago, Ill., for appellee.

Before BAKER, KOHLSAAT, and MACK, Circuit Judges.

KOHLSAAT, Circuit Judge (after stating the facts as above). [1] The several orders of the District Court were clearly proceedings in bankruptcy, and not plenary. Tefft v. Munsuri, 222 U. S. 114, 32 Sup. Ct. 67, 56 L. Ed. 118; Coder v. Arts, 213 U. S. 234, 29 Sup. Ct. 436, 53 L. Ed. 772, 16 Ann. Cas. 1008; Hewit v. Berlin Machine Works, 194 U. S. 296, 24 Sup. Ct. 690, 48 L. Ed. 986. Therefore the proceedings should be by original petition to review and revise.

[2] The main question presented is the construction to be placed upon the term "costs of administration," to which the several orders of the court authorizing the loans subjects them. The term cannot be limited to court costs, which would cover practically all the items conceded by appellant. It must therefore refer to all the expenses attending the execution of those orders of the court entered with reference to the furnishing of the contract asset of the bankrupt. Farmers' Loan and Trust Co. v. Stuttgart St. R. R. Co. (C. C.) 106 Fed. 565. Had the trustee paid cash for the material and labor invested in carrying on the work of completing the sewer, no question could or probably would have been raised. The mere fact that the trustee failed to pay as he should have done, had he funds so to do, does not alter the situation. The money on hand constituted a fund which should have been distributed, and should be treated as belonging, to the laborers, and, as we think, the materialmen, pro rata. It was obtained from the bank for that purpose. We regard these claims as just as much costs of administration under the facts of this case as would be the feed for stock under the receiver's care or the housing of perishable property. The bank is in the position of one loaning money to a trustee or receiver for a distinct purpose, and then seeking to reclaim it and prevent the application of it. It claims to have furnished all this fund, and it did; but it is not therefore entitled to recover it contrary to the purpose for which it advanced it. The controversy between the bank and the other claims, we think, grows out of the use of the term "costs of administration," which might seem, off-hand, to limit the term in a sense to taxable court costs in an ordinary case.

In the case of Anderson v. Condict, 93 Fed. 349, 35 C. C. A. 335, we held that, where the lien of the receiver's certificates was upon all the property and the proceeds thereof, and net income of the railroad in the receiver's hands, "after the payment of operating expenses and costs of administration," a claim for personal injuries was prior to the lien of the certificates, even as against the corpus of the property. The language here employed is, under the circumstances of the present case, the equivalent of that used in defining the limitation upon the lien of the certificates in the case just cited, and the argument of that opinion is applicable here. Undoubtedly the holders of the certificates must be charged with knowledge of the character and uncertainty of the undertaking to complete the said sewer and to have assumed all the vicissitudes of the situation. It was held in Pusey & Jones v. Penn. Paper Mills (C. C.) 173 Fed. 634, that expenses of construction work upon a mill would precede receiver's certificates, even when expressly made a first lien, as being expenses incurred in preserving the property upon which the certificates were secured.

[3] We concur in the finding of the referee that the labor and material claims should first be paid pro rata out of the funds in the trustee's hands, and, that fund being inadequate to satisfy said claims, the certificate holders will take nothing therefrom. We know of no rule of law which would give the labor claimants any preference over the materialmen under the facts of this case. No statutory or other special liens were perfected. As above stated, both classes of claims are held to be costs of administration and on an equal footing when furnished under the same circumstances.

The decree of the District Court in case No. 2204, in so far as it holds the lien of the bank to be subject to the payment of labor claims, is affirmed. As to the case of Gruner & Bros. Lumber Company, case No. 2258, the decree is reversed, with direction to examine farther into that claim to ascertain whether it has been paid and discharged in part or in whole since the decree therein was entered, and if the court shall find any sum still remaining due from the trustee to said Gruner & Bros. Lumber Company, then to cause distribution from the said balance held by him for distribution, to be made thereon to said Gruner & Bros. Lumber Company pro rata with said labor claims; otherwise, to distribute said balance pro rata between the labor claimants. In causes Nos. 2205 and 2263, the appeals are dismissed.

In re DUNTLEY.

PATTEN et al. v. DUNTLEY.

(Circuit Court of Appeals, Seventh Circuit. October 5, 1915.)

No. 2207.

1. BILLS AND NOTES ⟹310, 335—RIGHTS OF INDORSEES—NOTICE.

T.'s agent agreed with P. that P. could sell notes owned by T. for $15,000, and at P.'s suggestion agreed to leave them with a brokerage house. P. personally took the notes to the brokerage house, which issued two receipts, each covering one-half of the notes, and reciting that they were held in trust, subject to return or accounting for $7,500. *Held* that,

⟹For other cases see same topic & KEY-NUMBER in all Key-Numbered Digests & Indexes

whatever rights bona fide purchasers or lien creditors might have acquired, the transaction as between the parties was valid, and did not amount to a sale on credit, but a bailment, with an agreement to sell for cash, and P., who knew all of the facts, could not acquire legal title from the brokerage house, whether in payment of a pre-existing debt or for cash.

[Ed. Note.—For other cases, see Bills and Notes, Cent. Dig. §§ 742, 743, 817; Dec. Dig. ⚷310, 335.]

2. BILLS AND NOTES ⚷310—RIGHTS OF INDORSEES—NOTICE.

That T.'s agent received from the brokerage house sums aggregating $4,500 did not convert the agreement to sell for cash into a sale on credit; the retention of the receipt negativing any possible waiver of the condition precedent to the passing of title, payment in full.

[Ed. Note.—For other cases, see Bills and Notes, Cent. Dig. §§ 742, 743; Dec. Dig. ⚷310.]

3. ATTORNEY AND CLIENT ⚷129—COMPENSATION—SUFFICIENCY OF EVIDENCE.

On a petition to have D. adjudicated a bankrupt, evidence *held* insufficient to show that one of the petitioning creditors, whose claim was for legal services in connection with the execution of notes to take up notes previously executed on which the bankrupt claimed he was not personally liable, was derelict in his duty to his client, so as to defeat his claim for compensation.

[Ed. Note.—For other cases, see Attorney and Client, Cent. Dig. §§ 284–291; Dec. Dig. ⚷129.]

4. ATTORNEY AND CLIENT ⚷123—COMPENSATION—ACCOUNTS STATED.

An attorney sent D., a former client, a bill for services, and later asked him whether it was convenient to pay, and D. answered that the bill was all right, but that L. had charge of his financial affairs and would see the attorney. A few days later L. saw the attorney, and stated that he would be in in a few days and make a partial payment, and pay the rest as well as he could. It appeared that the relation of attorney and client had ceased prior to the conversation between the attorney and D., and that D. had then independent and able legal advisers. *Held*, that the facts showed an account stated.

[Ed. Note.—For other cases, see Attorney and Client, Cent. Dig. §§ 239–245, 248, 249; Dec. Dig. ⚷123.]

Appeal from the District Court of the United States for the Eastern Division of the Northern District of Illinois; Kenesaw M. Landis, Judge.

In the matter of John W. Duntley, bankrupt. From a judgment dismissing the petitions of Frank C. Patten and another to have Duntley adjudicated a bankrupt, the petitioners appeal. Affirmed in part, and reversed and remanded in part.

Louis E. Hart, of Chicago, Ill., for appellee.

Before BAKER, KOHLSAAT, and MACK, Circuit Judges.

MACK, Circuit Judge. This is an appeal from a judgment dismissing the petition of appellant Patten and the intervening petition of appellant Morris to have appellee Duntley adjudicated a bankrupt, on the ground that neither petitioner nor intervener had a provable claim.

Appellee, by his answer to the original petition, denied insolvency, the commission of any acts of bankruptcy, and that Patten had a provable claim; alleged that the title to the promissory note of $500 on

which Patten based his claim was in dispute in a cause pending in the state court wherein, on a bill filed by one Townsend, who claimed title to this and other notes, and the appellee, Patten had been enjoined from selling or transferring the notes; and further charged that the execution of the note had been procured by Patten and others by fraud and duress, and that the consideration therefor had wholly failed.

To the intervening petition he answered, denying the commission of the acts of bankruptcy, insolvency, that Morris was a creditor for $750 for legal services, as alleged, or for any amount.

[1, 2] Patten's note is one of a series given by the bankrupt under the following circumstances: Townsend owned two series of notes, each of which aggregated $35,000; the first executed by Duntley, the second, executed two years thereafter, by the Duntley Manufacturing Company. Both were given for the single loan of $35,000, originally made to Duntley before the company was organized, by a bank of which Townsend was president. Townsend had placed all the notes in the hands of his attorney, Faissler, with power to collect or to sell them. Appellant Patten was employed by Faissler to assist in their collection, and by unauthorized threats of bankruptcy proceedings induced Duntley to pay $500 cash and to execute a new third series of notes to his own order and indorsed in blank, in lieu of the other two series which were overdue. The cash and the new notes represented the $35,000 and accrued interest. In place of shares in the Duntley Manufacturing Company, theretofore given as collateral, certain contract rights belonging to Duntley, as well as a life insurance policy, were transferred by a trust instrument to Morris to secure the new notes. The third series of notes and the cash were delivered to Townsend's agent and attorney, Faissler; the first and second series with the stock collateral were returned to Duntley; Faissler thereupon paid Patten the $500 for his services. Faissler took the notes with him to Sycamore, Ill., where both he and Townsend resided.

Some days later, Faissler agreed with Patten that the latter could sell the notes for $15,000, and, on Patten's statement that he could not use them unless they were in Chicago, agreed to leave them with a brokerage house suggested by Patten, Lyon, Ratcliffe & Co., a corporation in Chicago. He handed them to Patten, who took them to Lyon, Ratcliffe & Co., and brought back to Faissler two receipts, signed by Lyon, Ratcliffe & Co., dated February 2, 1914, and reading as follows:

"Chicago, February 2, 1914.

"Received of John Faissler the following notes, signed by J. W. Duntley, which are held in trust, subject to return or accounting in full with our check for $7,500.00."

"Chicago, February 2, 1914.

"Received of John Faissler the following notes, signed by J. W. Duntley, which are held in trust, subject to a satisfactory accounting of $7,500 for same."

One-half of the notes are specified in each receipt. During the next few weeks, Faissler received in the aggregate $4,500 from Lyon, Ratcliffe & Co. and used the money on behalf of Townsend. At the time that Patten left the notes with Lyon, Ratcliffe & Co. he arranged to

sell them to this corporation for their face value, netting for himself the difference of about $24,000. Neither Faissler nor Townsend knew anything about this deal.

It is apparent from these facts that the legal title to the third series of notes vested at once in Townsend. The receipts demonstrated Lyon, Ratcliffe & Co.'s knowledge that, until the $7,500 was paid to Faissler, neither it nor Patten would acquire title to the notes specified therein. Whatever rights bona fide purchasers from or lien creditors of Lyon, Ratcliffe & Co. might acquire in and to the notes as against Townsend, the transaction evidenced by the receipts was entirely valid as between the immediate parties and as against any one who attempted to secure rights to the notes with knowledge of the facts. It effectuated, not a sale on credit, but a bailment with an agreement to sell for cash and the consequent right to acquire title to the notes specified in each receipt only on the payment of the agreed consideration of $7,500. The mere receipt of payments on account would not change the legal situation and convert an agreement to sell for cash into a present sale on credit. Faissler's retention of the receipt negatived any possible implied waiver of the condition precedent to the passing of title, payment in full. The record is devoid of the slightest evidence that either Faissler or Townsend intended to trust to the personal credit of either Patten or Lyon, Ratcliffe & Co.

Patten knew all the facts hereinabove recited. He could not, therefore, acquire from Lyon, Ratcliffe & Co. the legal title to negotiable paper, whether in payment of a pre-existing debt or even for cash. If this third series of notes constituted a valid obligation, Townsend, and not Patten, was their owner and Duntley's creditor. Irrespective, therefore, of the effect of the prior proceedings in the state court, the original petition was properly dismissed on the ground that Patten had no provable claim.

[3, 4] No evidence was offered that the reasonable value of Morris' legal services was $750, or at least $500, the amount necessary to enable him as sole creditor to maintain the petition, or, indeed, any other sum. He relied entirely upon an account stated. In support thereof, he testified as follows:

"I then subsequently [after January 29, 1914] sent in a bill to him for $750 for services and received no reply to it, and after waiting I think a month I called him up over the phone and asked him whether it was convenient to pay that bill, and he said to me the bill was all right, but Mr. David B. Lyman, Jr., had charge at that time of his financial affairs, and Mr. Lyman would come in and see me. Mr. Lyman came in a day or two afterwards, and said: 'Speaking about your bill, Mr. Duntley is somewhat hard up now, and if we can pay that in installments it would be satisfactory to him.' I stated to him I was ready to meet Mr. Duntley's necessities any time. He said: 'Well, I will be in in a few days and make a partial payment, and extend the rest along, and pay the rest as well as I can.' From that time forth I have heard nothing in regard to my bill and have received no payment on it. I never have had any word from Mr. Duntley. He never said to me it was incorrect, nor did he ever criticize me for my position in the matter personally."

On cross-examination, he testified:

"Q. Mr. Morris, you say that Mr. Duntley never criticized you in any way with reference to your representation of him? A. Not personally to me.

Q. Well, he did file a bill against you, and obtain a preliminary injunction in March, 1914, didn't he, in which bill he charged that you had been conspiring with Patten to defraud him? A. In conjunction with Mr. Townsend, yes. Q. You did not consider that a criticism? A. I said, 'Not personally to me.' Q. You mean, when you say 'Not personally to me,' he never came to you face to face and told you he thought you tried to do him? A. I consider that he is a mere interpleader. Q. You consider that he is a mere interpleader? A. Yes."

The defense attempted to be made under the denial that Morris had a provable claim is based on Morris' alleged dereliction of duty to his client. Morris had been attorney for Patten in various matters. A few weeks before the third series of notes was executed, Patten and Duntley were negotiating in reference to financing another corporation in which Duntley was interested. Morris, at that time, drew up an agreement on behalf of Patten, but the deal fell through. In this way he became acquainted with Duntley and learned of his condition. The attorney who had theretofore managed Duntley's affairs, at least those involved in the first and second series of notes, was critically ill and soon thereafter died. When Duntley was being pressed by Patten for payment of the notes, and was being threatened with bankruptcy proceedings, he retained Morris to act for him. Morris had refused to act for Patten in instituting bankruptcy proceedings, and consented to act as Duntley's attorney only after Patten waived any objections thereto. Morris did not see the first and second series of notes before drawing up the third series and the trust agreement, but acted on Duntley's statements. Duntley now claims that the second series of notes was given in substitution and payment for the first series, and that when they were given he expected to get back the first series; that under these circumstances he individually had a valid defense to the first series of notes, and but for the alleged wrongful act of Morris in not properly guarding his interests and investigating the matter, and in falsely stating, according to Duntley's testimony, that Duntley was an indorser on the second series, Duntley would not have executed the third series, and thereby have involved himself in further personal liabilities.

Morris denied having stated to Duntley that he was an indorser on the second series of notes. If the question were to be determined solely on this conflict, a finding by the trial judge, who had the opportunity of seeing the witnesses, would be conclusive as to Morris' dereliction of duty, and the finding that, "In view of the manner in which said claim of said Joseph O. Morris arose, this court declines to find that said claim of Joseph O. Morris is a provable claim in bankruptcy against the said John W. Duntley," might be interpreted as finding such dereliction of duty.

Duntley's statements, however, are directly contradicted by the bill of complaint, filed by him and Townsend in the state court, sworn to by both of them and introduced in evidence at the hearing. No claim is made therein that the second series was given in payment of the first. On the contrary, it is there charged that both series are now owned by Townsend, and that Duntley is ready to redeliver both of them to Townsend on the cancellation of the third series, which they

charge had been obtained under unauthorized threats to begin bankruptcy proceedings and with the purpose of misappropriating them and thus defrauding Townsend. Townsend and Faissler were both witnesses. Townsend had been president of the bank that made the original loan of $35,000. He had purchased $20,000 of the notes before the second series was issued, and subsequently purchased the other $15,000; $20,000 of the second series were made payable to Townsend's order and delivered to him; the others were made payable to the bank and delivered to it. Faissler was connected with the bank. Neither of them testified in corroboration of Duntley's statement that he expected the first series to be given up when the second series was executed.

On his direct examination, Duntley testified that he joined Townsend in bringing the suit in the state court when he discovered the falsity of Morris' statement that he was an indorser on the second series of notes. If the discovery of the falsity of the alleged statement not merely preceded, but, as Duntley's testimony was evidently intended to imply, caused him to begin the suit, and if his testimony in this cause as to the relation between the first and second series of notes were true, it is more than passing strange that in the bill of complaint he should have admitted the validity of the first series and his personal liability thereon as maker. This bill was filed on March 17, 1914, less than two months after the third series of notes was executed, and necessarily within a short time after Lyman's statement to Morris. In view of the allegations in this bill of complaint, and of Duntley's consequent liability as maker of the first series of notes, a statement that he was indorser of the second series, although erroneous, would have been entirely unimportant. We are satisfied, however, for the reasons above stated, that the conflict on this point must be determined in favor of Morris.

Whatever wrong may have been intended and committed against Townsend in connection with the third series of notes, Duntley could only benefit by their exchange for the first and second series. He thereby secured a long extension on a completely matured debt. We find nothing in the evidence to sustain a defense to the Morris claim based on a dereliction of his duty to his client. Morris was retained solely in connection with the refunding of these notes. At that time, and at the time Duntley acknowledged that the bill of $750 was all right, and stated that he would have Lyman see Morris about it, the relation of Duntley to Morris as client to attorney had ceased. Duntley, at that time, had independent and able legal advisers. Under these circumstances, the account stated must be held to have been fully proved.

The judgment, in so far as it dismisses the original petition, is affirmed; in so far as it dismisses the intervening petition, it is reversed, and the cause is remanded for a new trial on the other issues made by the intervening petition and the answer thereto.

In re BROWN COMMERCIAL CAR CO.

BROWN COMMERCIAL CAR CO. v. CONTINENTAL MOTOR MFG. CO. et al.

(Circuit Court of Appeals, Seventh Circuit. October 5, 1915.)

No. 2211.

1. BANKRUPTCY ⟹91—INSOLVENCY—EVIDENCE.
That an officer of a corporation made a statement of its condition to its creditors and asked for a settlement at 35 cents on the dollar was a circumstance to be considered in determining whether it was insolvent, though his authority was not clear.
[Ed. Note.—For other cases, see Bankruptcy, Cent. Dig. §§ 137–139; Dec. Dig. ⟹91.]

2. BANKRUPTCY ⟹56—ACTS OF BANKRUPTCY—TIME OF COMMISSION.
If preferential payments alleged as acts of bankruptcy were made more than four months prior to the filing of the amended petition which asserted them, and were then charged for the first time, and were new and independent preferential acts, charged by way of substitution for the items alleged in the original petition, and not mere enlargements and amendments to alleged acts of bankruptcy set up in petitions filed within four months, the transactions did not arise within four months preceding the filing of the petition.
[Ed. Note.—For other cases, see Bankruptcy, Cent. Dig. §§ 61–65, 67, 68, 86–96; Dec. Dig. ⟹56.]

3. BANKRUPTCY ⟹58—ACTS OF BANKRUPTCY—TIME OF COMMISSION.
An involuntary petition in bankruptcy alleged as an act of bankruptcy a preferential payment by the bankrupt to a bank. An amended petition alleged various preferential payments to creditors of the bankrupt, made more than four months before the filing of the amended petition, but within four months before the filing of the original petition. It appeared that the payments to such creditors were made through the bank. *Held*, that the allegations of the amended petition were mere explanations of the act of bankruptcy charged in the original petition, and such payments were therefore available as the basis of an adjudication.
[Ed. Note.—For other cases, see Bankruptcy, Cent. Dig. §§ 57, 72–79, 83; Dec. Dig. ⟹58.]

4. BANKRUPTCY ⟹58—ACTS OF BANKRUPTCY—PREFERENTIAL PAYMENTS.
The return of money advanced to a corporation to meet its pay roll, made within one day of the time of its advance, was not such a preferential payment as would support an adjudication in bankruptcy, especially where the attorney for the petitioning creditors, when interrogated in regard thereto, indicated that he would not rely thereon.
[Ed. Note.—For other cases, see Bankruptcy, Cent. Dig. §§ 57, 72–79, 83; Dec. Dig. ⟹58.]

Appeal from the District Court of the United States for the District of Indiana; Albert B. Anderson, Judge.

Petition by the Continental Motor Manufacturing Company and others to have the Brown Commercial Car Company adjudicated a bankrupt. From a decree adjudging such company a bankrupt, it appeals. Affirmed.

Appellant, an Indiana corporation, organized for the purpose of manufacturing and selling light commercial gasoline trucks, was the owner of a plant located near Peru, Ind., with good transportation facilities, which it purchased

from the Otis Elevator Company for $50,000 in September, 1912, giving therefor no cash, but its 20 notes, for $2,500 each, bearing 6 per cent. interest, maturing at intervals of six months. The plant included several traveling cranes equipped with motors, a power plant which could be easily made to supply necessary power, complete heating, plumbing, and sanitation outfit, together with pumps, machine shops, etc. The buildings were large and substantial and in good condition. The capital stock of appellant was fixed at $100,000, $51,000 of which was subscribed. The balance of $49,000 was to become the property of the president of the company on the happening of certain conditions, which never transpired. The first installment of interest, amounting to $1,500, and the first purchase-price note of $2,500 and interest, were paid. The rest appellant never paid. While it was operating, appellant manufactured and marketed about 150 of its cars. It had some 20 cars on hand, and others under way, when proceedings were begun. The plant was inventoried at about $76,000, or about $26,000 in excess of the purchase price, without including good will, catalogues, parts, etc.

On December 19, 1913, the original petition in bankruptcy herein was filed. It charged insolvency and a preference given to the First National Bank of Peru, Ind., by the payment of $10,000 on or about September 15, 1913. On February 10, 1914, an amended petition in bankruptcy was filed, setting up three acts of bankruptcy—two in addition to that set out in the original petition, both of which were afterwards abandoned. Afterwards, on March 17, 1914, a second amended petition was filed, setting up said first-mentioned preference, said two abandoned alleged acts of bankruptcy, and a new one, to the effect that a preference had been given in the payment of $300 to B. G. Kramer Company on September 23, 1913, and also that "within four months preceding the filing of the original petition herein, on or about the ——— day of ———, Brown Commercial Car Company, while insolvent, committed an act of bankruptcy, in that it did pay to a certain creditor of said Brown Commercial Car Company the sum of ten (10) dollars"; the date of such payment and the payee being unknown to petitioners and not ascertainable, except to said company, whereby a preference was created. On April 28, 1914, a third amended petition was filed. This charged acts of bankruptcy 2 and 3 the same as in the second amended petition, omitted the $10 preference, and substituted the following; i. e.: "That within four months preceding the filing of the original petition herein the said Brown Commercial Car Company, while insolvent, committed further acts of bankruptcy, in that it transferred while insolvent a portion of its property to one or more of its creditors with intent to prefer such creditors," etc., mentioning the names and amounts, and dates of payment ranging from September 8 to December 7, 1913. The original and amended petitions were all negatived by appellant. The original petition was referred to a special master. The amended petitions were not formally referred. They were, however, considered by him, and both appellant and appellees entered upon a hearing thereof without protest, and he made report that at the time the original petition was filed, and for more than four months prior thereto, appellant was insolvent; that on December 7, 1913, it committed an act of bankruptcy in making a payment of $134.73 to one Edwards, while it was insolvent and knew it; that on September 20, 1913, appellant committed a further act of bankruptcy by the payment of $300 to B. G. Kramer, while insolvent and knowing it; that in like manner, by the payment of $150 to the Garage Equipment Company on September 8, 1913, of $228.60 to the Mather Spring Company on September 10, 1913, of $849.54 to Highland Body Company on September 15, 1913, and of $200 to Hays Manufacturing Company, it committed further acts of bankruptcy. He thereupon recommends that the prayer of the third amended petition be granted and appellant adjudged a bankrupt.

A number of witnesses were examined as to the insolvency of appellant. The latter complains that the master accepted the testimony of those who confessedly treated the real estate as part of a dead plant, whereas it claims to have been a going concern. It appears from the evidence that, while it had been employing 50 persons in its work, it had reduced the number to 10. This evidence was before him. Appellant's witnesses placed the value of the

seven-acre plant, including buildings and appurtenances, at from $50,000 to $90,000. Appellees' witnesses placed the value at from $12,500 to $30,000. The master fixed the value at $35,000, and the value of all the personal estate at $45,000, or a total of $80,000. The liabilities, he found, amounted to at least $95,000, with the business tending downward. It will thus be seen that the master found a decrease in the real estate from the purchase price of $15,000 in a period of six months. It appears that the plant was a dead one when appellant bought it. The enterprise was financed by the commercial club of Peru in the attempt to secure a manufacturing plant for the city. On the hearing upon the report of the master it was sustained, and appellant was adjudged a bankrupt, and this appeal was taken.

The errors assigned are, in substance: (1) That the court decreed appellant to be insolvent; (2) that the court found said acts to be preferences; (3) the court adjudged that the payments to Garage Equipment Company, Mather Spring Company, Highland Body Company, and Hays Manufacturing Company constituted preferences, respectively, and consequently acts of bankruptcy, and held that appellant should be adjudged a bankrupt by reason of these, whereas none of these acts occurred within a period of four months before the petition which alleges them was filed.

Other facts will appear in the opinion.

Claude Y. Andrews, of Peru, Ind., tor appellee.

Before BAKER, KOHLSAAT, and MACK, Circuit Judges.

KOHLSAAT, Circuit Judge (after stating the facts as above). [1, 2] While there may have been some haste in closing down upon the new-born project of appellant, and a decided bearish attack upon the value of the real estate then recently purchased for the sum of $50,000, we are unable to discover from the record that there was any error calculated to discredit the finding of the master. While the plant was not yet moribund, the evidence gives strong color to appellees' contention that it was headed in that direction. Some one of appellant's officers made a statement to its creditors of its condition and asked for a settlement at 35 cents. While the authority of this party does not seem clear, it is a circumstance to be considered. There is no evidence of a brightening future. The evidence in such cases is generally so conflicting as to make a review of little value. The present case was no exception. The master had all the facts and the proclaimers of them before him, and, under the circumstances, we are not disposed to overthrow his findings. We therefore concur in the adjudication of the master and the District Court as to the insolvency of appellant at the time of and for four months previous to the filing of the original petition.

The adjudication was recommended by the master, based upon the third amended petition, filed April 28, 1913. This sets out several alleged preferential acts growing out of the transactions with the First National Bank of Peru, and the alleged preferential payments, among others, to R. A. Edwards, B. G. Kramer, Garage Equipment Company, Mather Spring Company, Highland Body Company, and Hays Manufacturing Company, which are the only items which the master finds constituted preferences. These transactions took place more than four months prior to the filing of the third amended petition. For this reason, mainly, appellant urges that the appellees have failed to allege preferential payments within the four-months period immediately

preceding the filing of the petition which alleges them. If these acts occurred more than four months prior to the filing of the amended petition which asserts them, and were charged for the first time on April 28, 1914, and are new and independent preferential acts charged by way of substitution for the items alleged in the original petition, and not mere enlargements and amendments to the alleged acts of bankruptcy set out in petitions filed within the proper four-months period, then and in that case the transactions have not arisen within the four-months period immediately preceding the filing of the petition. Remington on Bankruptcy, §§ 264, 265; Reed v. Crowley, 1 N. B. R. 516 (Fed. Cas. No. 11,644); In re Leonard, 4 N. B. R. 562 (Fed. Cas. No. 8,255); In re Haff, 136 Fed. 78, 68 C. C. A. 646; Walker v. Woodside, 164 Fed. 680, 90 C. C. A. 644; In re Pure Milk Co. (D. C.) 154 Fed. 682.

[3, 4] For appellee it is contended that, while the several items covering the names of payees and the dates and amounts of payments alleged to have been preferences, as set out in the third amended petition, were not mentioned by name in any of the preceding petitions, yet some of them were in fact included in the first allegations of an act of bankruptcy in the original petition concerning advances to the First National Bank of Peru; that is to say, the payments to the Garage Equipment Company, the Mather Spring Company, and the Highland Body Company were paid to or through the said bank, but were in fact payments to or for said several parties. We regard said three statements of the third amended petition as mere explanations of the first act of bankruptcy charged, and not as substituted items, since the record shows such to be the facts. Appellee further claims that each of the alleged preferential payments specified by name, date, and amount in the third amended petition are specifications of the $10 item set out in the second amended petition filed March 17, 1914; but this amended petition was filed after the lapse of more than four months from the date of the transactions herein attempted to be made bases for evidence of preferences. Since the waiver of the second and third alleged acts of bankruptcy, and under the rule above stated, all acts alleged for the first time in the second and third amended petitions, if not elaborations of or pertaining to the first alleged act of bankruptcy, viz., preferential payments to the First National Bank of Peru, are not properly pleaded. We are unable to trace any connection between the allegations of the second amended petition as to a preferential payment of $10 to unknown creditors and any previously alleged act of bankruptcy. So far as we can judge from the evidence, that item refers to a new and independent act of bankruptcy. The alleged preferential payment of $134.73 to Edwards was merely the return of money advanced to meet the pay roll, made within one day of the time of its advance. Moreover, when interrogated thereto, counsel for appellees indicated that he would not rely on this item. (Record, p. 77.) We do not consider it available for the purposes of this suit.

The allegation of the second amended petition that appellant committed an act of bankruptcy, in that it paid the sum of $300 to B. G. Kramer on September 20, 1913, was first made on March 17, 1913, or

almost six months after that payment was made, although it was a payment in fact to one Andrews, the person who was petitioners' attorney, and as such made oath to the original and the first and second amended petitions, and therefore cannot urge want of notice of such payment. This payment was an independent item, and cannot be held to have been included in any previous charge of a preferential payment. It could not, therefore, have been available for purposes of adjudication.

Without taking up the other items of the third amended petition, which seem to be only a few out of many payments in the regular course of business, we are of the opinion that the three items above mentioned—those of the Garage Equipment Company, the Mather Spring Company, and the Highland Body Company—may, under the rule laid down in In re Shoesmith, 135 Fed. 684, 68 C. C. A. 322, properly be regarded as specifications under the said first alleged act of bankruptcy, and, as such, treated as amendments thereto and not as substitutes therefor. These payments, it appears, were made when appellant was insolvent and unable to pay its debts, and were by the master and District Court, and are by us, deemed to constitute acts of bankruptcy.

The decree of the District Court is therefore affirmed.

BUFFALO SPECIALTY CO. v. VAN CLEEF et al.

(Circuit Court of Appeals, Seventh Circuit. October 5, 1915.)

No. 2159.

1. EQUITY ⟹362—DISMISSAL OF BILL—GROUNDS.

Where, in an action for infringement of a trade-mark or trade-name and for unfair competition, the bill was good, it could not be dismissed on motion, unless the defensive matter in complainant's answers to interrogatories propounded by defendant was so conclusive that it could not be affected by any avoiding evidence in support of the bill, or in support of a replication that might have been filed in the ordinary course of the case.

[Ed. Note.—For other cases, see Equity, Cent. Dig. §§ 758–761; Dec. Dig. ⟹362.]

2. EQUITY ⟹363—DISMISSAL OF BILL—PRESUMPTIONS.

Where, in a suit for infringement of a trade-name under which complainant was selling a tire fluid, the bill did not admit, and complainant's answers to interrogatories did not affirm, that the tire fluid of the particular species sold by complainant was patented, it would be taken, as against a motion to dismiss, that every one was free to manufacture and sell tire fluids, even complainant's, if its formula could be learned, and that many brands under distinctive names and marks were on the market.

[Ed. Note.—For other cases, see Equity, Cent. Dig. §§ 762–766, 768; Dec. Dig. ⟹363.]

3. TRADE-MARKS AND TRADE-NAMES ⟹85—LOSS OF RIGHTS—MISREPRESENTATION.

Complainant manufactured a tire fluid according to a secret formula and sold it under a trade-name. One D. obtained a patent for a vehicle tire, consisting of a combination of a pneumatic tire and a free-flowing

---

⟹For other cases see same topic & KEY-NUMBER in all Key-Numbered Digests & Indexes

sealing agent within the air chamber. Complainant purchased this patent, and thereafter used, in connection with its tire fluid, a label on which appeared a circle representing a pneumatic tire within which were the words: "Patented U. S. A. Foundation patent No. 578,551." Below the circle were statements that this was the foundation patent, and covered the use of any liquid, semi-liquid, paste, powder, or compound capable of being converted into or used in connection with any liquid, in any pneumatic tire for closing punctures, that plaintiff's tire fluid was manufactured and sold under and by the owner of such patent, and that persons making, selling or using any other such fluid were infringers. *Held*, that complainant was justified in buying the patent to avoid infringing it, and the label in question was not such an abuse of its patent rights as deprived it of its pre-existing property right in its trade-name.

[Ed. Note.—For other cases, see Trade-Marks and Trade-Names, Cent. Dig. § 94; Dec. Dig. ⚷85.]

4. EQUITY ⚷363—DISMISSAL OF BILL—PRESUMPTIONS.

In a suit for infringement of the trade-name, where neither complainant's bill nor its answers to interrogatories admitted that defendants or the public were ignorant of the true facts concerning the patent, this could not be assumed on a motion to dismiss; but, on the contrary, it would be assumed that the final proofs would show that defendants and the public knew of the relation of the tire fluid to the patented vehicle tire, and never erroneously associated the trade-name of the secret mixture with the combination patent.

[Ed. Note.—For other cases, see Equity, Cent. Dig. §§ 762–766, 768; Dec. Dig. ⚷363.]

5. TRADE-MARKS AND TRADE-NAMES ⚷11—NAMES OF PATENTED ARTICLES.

If, as would be assumed on a motion to dismiss, the patented tire had no generic name, and all pneumatic tires, whether containing a free-flowing sealing agent or not, were made and sold under the marks and names of their manufacturers, the expiration of the patent could not authorize the public to use the trade-name of the unpatented element, under the rule that the expiration of the patent authorizes the use of the name of the patented article, where it has become a generic name.

[Ed. Note.—For other cases, see Trade-Marks and Trade-Names, Cent. Dig. § 15; Dec. Dig. ⚷11.]

6. TRADE-MARKS AND TRADE-NAMES ⚷11—LOSS OF RIGHTS—MISREPRESENTATION.

That complainant, after the expiration of the patent, used a label on which was a picture of a tire and the words: "Patented U. S. A. March 9, 1897. Patent No. 578,551"—did not deprive it of its right to equitable relief against the piracy of its trade-name and unfair competition; the word "patent" not having been used under such circumstances as to import the assertion of a presently existing monopoly.

[Ed. Note.—For other cases, see Trade-Marks and Trade-Names, Cent. Dig. § 15; Dec. Dig. ⚷11.]

Appeal from the District Court of the United States for the Eastern Division of the Northern District of Illinois; Arthur L. Sanborn, Judge.

Suit by the Buffalo Specialty Company against Noah Van Cleef and others, a copartnership doing business as Van Cleef Bros. From a decree dismissing the bill, complainant appeals. Reversed and remanded.

See, also, 217 Fed. 91.

Albert H. Graves and Charles K. Offield, both of Chicago, Ill., for appellant.

Thomas A. Banning, Jr., and Samuel W. Banning, both of Chicago, Ill., for appellees.

Before BAKER, KOHLSAAT, and MACK, Circuit Judges.

BAKER, Circuit Judge. Appellant's bill counted on three wrongs: Appellees' use of appellant's trade-name, "Neverleak," in connection with the manufacture and sale of "tire fluids"; simulation of dress, whereby an intending purchaser would likely be misled; and the actual palming-off of the imitation by false representations and by inducing dealers to effect substitutions.

In each of these respects the bill stated a good cause of action.

Through appellant's answers to interrogatories propounded by appellees certain defensive facts were brought into the record. These, however, pertained only to the use of the word "Neverleak."

Appellees' motion on this state of the record to dismiss the bill for want of equity was sustained, the court being of the opinion that the expiration of a patent owned by appellant brought the use of "Neverleak" within the Singer (Singer Mfg. Co. v. June Mfg. Co., 163 U. S. 169, 16 Sup. Ct. 1002, 41 L. Ed. 118) and Castoria (Centaur Co. v. Heinsfurter, 84 Fed. 955, 28 C. C. A. 581 and Centaur v. Marshall [C. C.] 92 Fed. 605) Cases.

[1] Inasmuch as the bill was good, it could not properly be dismissed on motion, unless the defensive matter in the answers to the interrogatories (in effect the same as if admitted in the bill or as if set forth as a complete answer which was demurred to by appellant) was so conclusive that it could not be affected by any avoiding evidence in support of the bill or in support of a replication that might have been filed in the ordinary course of the case. Bronk v. Charles H. Scott Co., 211 Fed. 338, 128 C. C. A. 17, and cases there cited.

With respect to rights in the word "Neverleak" the bill alleged that appellant in 1893 began making a tire fluid according to a secret formula that has never been disclosed in a patent or otherwise; that appellant invented the word "Neverleak" and applied it to the product; that appellant's product was so meritorious that the compounding and marketing thereof grew to vast and highly profitable proportions; and that from 1893 to the filing of the bill in 1914 the trade and the public recognized "Neverleak" as appellant's trade-name that identified the product and pointed to appellant as maker and seller.

In answers to interrogatories appellant admitted that a patent, No. 578,551, was issued on March 9, 1897, to one Duryea, on his application filed December 28, 1891; that appellant in 1898 purchased the patent; that the patent expired by law on March 9, 1914; that from 1898 to March 9, 1914, appellant used label Exhibit A; that from March 9, 1914, to the filing of the bill on April 10, 1914, appellant used label Exhibit B; that the labels had been included in advertisements in newspapers and magazines; and that during the life of the patent appellant had sued several alleged infringers.

Duryea's patent is entitled "Vehicle Tire." In the specification he

disclosed that "the invention relates to pneumatic tires for vehicle wheels, the object being to render tires self-healing—that is to say, adapted automatically to close a puncture." All the seven claims, with varying degrees of specificness, are for combinations of a "pneumatic tire" and a "free-flowing sealing agent within its air chamber."

Across the top of label A appear the words "Neverleak Tire-Fluid" in large capital letters. Below this and at the center of the label is a circle, representing a pneumatic tire. Within the circle is the statement in smaller capital letters: "Patented U. S. A. Foundation patent No. 578,551." Around the upper half of the circumference of the pictured tire and in still smaller capital letters is the legend, "Automatically Closing Punctures." Below the circle and in ordinary newspaper type an explanation and a warning are printed. Explanation:

"This is the foundation patent and covers the use of any liquid, semi-liquid, paste, powder or compound capable of being converted into or used in connection with any liquid, in any pneumatic tire for closing punctures."

Warning:

" 'Neverleak tire fluid' is manufactured and sold under, and by the owner of, said patent, the Buffalo Specialty Company. All persons, firms or corporations making, selling or using any other tire fluid, powder or compound, are infringers of said U. S. patent. Buffalo Specialty Company."

Label B is the same with two exceptions. For the former statement within the pictured tire this substitute is given: "Patented U. S. A. March 9, 1897. Patent No. 578,551." In the place of the explanation and warning the following matter is printed:

"Net weight, four ounces. Price, 25 cents. This tube treats one tire. Buffalo Specialty Company."

Appellant's use of "Neverleak" as a trade-name is to be considered during three periods.

[2] From 1893 to 1898. As the bill establishes, appellant founded and was building a valuable business in making and selling a "tire fluid," and the public had come to recognize "Neverleak" as the word (whether primarily a trade-mark or secondarily a trade-name is immaterial) that pointed to the origin and identity of the particular product. "Tire fluid" was the name of the genus, and "Neverleak" was the name of appellant's species. Since the bill does not admit, and the answers to interrogatories do not affirm, that the genus or appellant's species was patented, or that no other makers were in the market, it must be taken as against the motion to dismiss that every one was free to manufacture and sell tire fluids, even appellant's, if the secret formula could be learned, and that many brands under distinctive names and marks were on the open market during this period. So it is evident that appellant acquired a property right in the use of "Neverleak," and still has it, unless it has been forfeited by appellant's subsequent conduct.

[3] From 1898 to March 9, 1914. Just prior to the beginning of this period appellant was confronted with a peculiar situation. Many tire fluids were on the market, among them appellant's "Neverleak."

Duryea had obtained a patent on a "vehicle tire," comprising a combination of any "pneumatic tire" and any "free-flowing sealing agent within its air chamber." If appellant or any other maker should sell tire fluids for the purpose of having them combined with pneumatic tires, and such would clearly be the purpose, he would be a contributory infringer of the Duryea patent on vehicle tires. Duryea's application was filed in 1891. And since no public use of Duryea's combination earlier than the inferential use by tire owners of appellant's tire fluid in 1893 is suggested by the record, Duryea's patent must stand here as impregnable. With such a cloud overhanging its business, appellant was justified in buying the patent. Appellees do not deny this, but insist that appellant has so abused its patent right that it has lost its pre-existing property right in its trade-name "Neverleak."

In our judgment the explanation in label A is clear and unambiguous. Patent No. 578,551 *was* the foundation patent and it *did* cover the use of any liquid in any pneumatic tire for closing punctures. It was proper, even if unnecessary, in the first sentence of the part we have entitled "Warning," to assure purchasers of "Neverleak" that they were authorized to use it in pneumatic tires. Fair notice to rival concerns was given by the concluding sentence that, if they should continue to make, sell, or use "tire fluids" (for the purpose to which such fluids had always theretofore been put) they would infringe the combination patent. And there is nothing to show that appellant's prosecutions of alleged infringers were unfair to them, or to the public, or to appellees.

[4] Taking the label as a whole, we think its meaning is plain; but, even if ambiguities could be found in segregated parts, the motion to dismiss should not have prevailed. We cannot accept assertions in appellees' brief, outside the record, that appellees and the public were misled by the supposed ambiguities. In neither the bill nor in the answers to interrogatories does appellant admit appellees' or the public's ignorance of the true state of facts respecting the patent. We therefore may assume that the final proofs would show, as appellant, also outside the present record, declares, that appellees were former employés of appellant and knew all about the relation of the tire fluid "Neverleak" to the subsequently patented "vehicle tire," and likewise that dealers and the general public never erroneously associated the trade-name of appellant's secret liquid mixture with the combination patent on a vehicle tire.

[5] No generic name for the patented tire appears in the record. Presumably, therefore, all pneumatic tires, whether containing a "free-flowing sealing agent" or not, were made, sold, and used under the several marks and names of their manufacturers. This condition with respect to a generic name for the patented tire is very far from establishing that the pre-existing trade-name of one unpatented element became the generic name of the patented combination. So the Singer and Castoria Cases do not apply. Compare Batcheller v. Thomson, 93 Fed. 660, 35 C. C. A. 532; De Long Hook & Eye Co. v. Francis Hook & Eye Co. (C. C.) 139 Fed. 146; Prest-O-Lite Co. v. Davis, 215 Fed. 349, 131 C. C. A. 491; Searchlight Gas Co. v. Prest-O-Lite Co.,

215 Fed. 692, 131 C. C. A. 626; Avenarius v. Kornely, 139 Wis. 247, 121 N. W. 336.

[6] From March 9, 1914, to April 10, 1914. No objection is urged against label B except that the words "Patented U. S. A. March 9, 1897. Patent No. 578,551" are printed within the circle of the pictured tire. Appellees and the public were legally chargeable with knowledge that the patent had expired, the date being given. All that can be said from the face of the label is that appellant needlessly gave true information of the fact that prior to March 9, 1914, the patent was in force, and inferentially that it had been owned by appellant and used in some way not disclosed by label B. Full proofs might establish a business propriety in appellant's making as little change as possible in its previously well known and rightfully used business dress. At all events pirates cannot keep their victim out of equity on their cry of "unclean" simply by showing a use of the word "patent" under circumstances that fail to import an assertion of a presently existing monopoly. Frank W. Witcher Co. v. Sneierson (D. C.) 205 Fed. 767; Marshall v. Ross, L. R. 8 Eq. 651; Cheavin v. Walker, L. R. 5 Ch. D. 850; Morgan v. McAdam, 36 L. J. Ch. D. 228; Ransome v. Graham, 51 L. J. Ch. D. 897.

Concerning simulation of dress. Appellant exhibited with its bill a display box of appellees' tubes of tire fluid. The center of attraction is the word "Neverleak." Similarities in the make-up and markings of containers and display boxes are observable. There are also dissimilarities. A comparison induces us to believe that appellees intended to subordinate the dissimilarities and intended purchasers to be deceived by the similarities into buying the wrong "Neverleak." If appellees had a contrary intention, or if their intended deceptive means were in fact inefficient, the bill does not so admit, nor do the answers to interrogatories so prove.

With the defensive matter respecting appellant's use of the word "patent" in connection with its trade-name "Neverleak" disposed of as insufficient for any defensive purpose, no basis for the motion to dismiss exists as against the bill's charge of actual palming-off by fraudulent representations.

The decree is reversed, and the cause is remanded for proceedings consentaneous to this opinion.

CHIN SING v. UNITED STATES.

(Circuit Court of Appeals, Seventh Circuit. October 5, 1915.)

No. 2128.

1. INTERNAL REVENUE ⟹47—MANUFACTURING SMOKING OPIUM—FAILURE TO GIVE BOND—PROSECUTIONS.

The government, on prosecution for manufacture of opium for smoking purposes without the giving of the bond required by law, Act Jan. 17, 1914, c. 10, § 1, 38 Stat. 277, requiring "the bond required by the Commissioner of Internal Revenue," must show that said Commissioner had, by regulation, required a bond, and what it called for.

[Ed. Note.—For other cases, see Internal Revenue, Cent. Dig. §§ 144-150; Dec. Dig. ⟹47.]

2. INTERNAL REVENUE ⟹47—MANUFACTURING SMOKING OPIUM—NONCOMPLIANCE WITH REGULATIONS—PROSECUTIONS.

The government, on prosecution for manufacturing opium for smoking purposes without doing certain things, as required by the Commissioner of Internal Revenue, with the approval of the Secretary of the Treasury, by regulations made by said Commissioner under authority of law, must show the making of the regulations and what they were.

[Ed. Note.—For other cases, see Internal Revenue, Cent. Dig. §§ 144-150; Dec. Dig. ⟹47.]

3. INTERNAL REVENUE ⟹47—MANUFACTURING SMOKING OPIUM—FAILURE TO STAMP—PROSECUTIONS.

The government, on prosecution for manufacturing opium for smoking purposes without stamping it in such a permanent manner as to denote payment of the internal revenue tax thereon, must show existence of a stamp therefor, required by regulation of the Commissioner of Internal Revenue, with approval of the Secretary of the Treasury.

[Ed. Note.—For other cases, see Internal Revenue, Cent. Dig. §§ 144-150; Dec. Dig. ⟹47.]

In Error to the District Court of the United States for the Eastern Division of the Northern District of Illinois; Kenesaw M. Landis, Judge.

Chin Sing was convicted of violation of the laws as to smoking opium, and brings error. Reversed, with direction for new trial.

The indictment herein consists of six counts, of which the first four are based upon the act of Congress approved January 17, 1914, entitled "An act regulating the manufacture of smoking opium within the United States and for other purposes" (38 Stat. 277, c. 10), and the last two are based upon the act of Congress approved February 9, 1909, entitled "An act to prohibit the importation and use of opium for other than medicinal purposes" (35 Stat. 614, c. 100 [U. S. Comp. St. 1913, §§ 8800, 8801]).

Inasmuch as the exact language of these acts becomes material under the errors assigned, they are set out here. The former provides:

"Section 1. That an internal revenue tax of $300 per pound shall be levied and collected upon all opium manufactured in the United States for smoking purposes; and no person shall engage in such manufacture who is not a citizen of the United States and who has not given the bond required by the Commissioner of Internal Revenue. Every person who prepares opium suitable for smoking purposes from crude gum opium, or from any preparation thereof, or from the residue of smoked or partially smoked opium, commonly known as yen shee, or from any mixture of the above, or any of

them, shall be regarded as a manufacturer of smoking opium within the meaning of this act.

"Sec. 2. That every manufacturer of such opium shall file with the collector of internal revenue of the district in which his manufactory is located such notices, inventories, and bonds, shall keep such books and render such returns of material and products, shall put up such signs and affix such number to his factory, and conduct his business under such surveillance of officers and agents as the Commissioner of Internal Revenue, with the approval of the Secretary of the Treasury, may by regulation require. But the bond required of such manufacturer shall be with sureties satisfactory to the collector of internal revenue, and in a penal sum of not less than $100,000; and the sum of said bond may be increased from time to time and additional sureties required, at the discretion of the collector or under instructions of the Commissioner of Internal Revenue.

"Sec. 3. That all opium prepared for smoking manufactured in the United States shall be duly stamped in such a permanent manner as to denote the payment of the internal revenue tax thereon.

"Sec. 4. That the provisions of existing laws covering the engraving, issue, sale, accountability, effacement, cancellation, and the destruction of stamps relating to tobacco and snuff, as far as applicable, are hereby made to apply to stamps provided for by the preceding section.

"Sec. 5. That a penalty of not less than $10,000 or imprisonment for not less than five years, or both, in the discretion of the court, shall be imposed for each and every violation of the preceding sections of this act relating to opium by any person or persons; and all opium prepared for smoking purposes wherever found within the United States without the stamps required by this act shall be forfeited and destroyed.

"Sec. 6. The provisions of the act of October first, eighteen hundred and ninety (Twenty-sixth Statutes, page fifteen hundred and sixty-seven), in so far as they relate to the manufacture of smoking opium, are hereby repealed."

The two sections of the latter act read as follows, viz.:

"Section 1. That after the first day of April, nineteen hundred and nine, it shall be unlawful to import into the United States opium in any form or any preparation or derivative thereof: Provided, that opium and preparations and derivatives thereof, other than smoking opium or opium prepared for smoking, may be imported for medicinal purposes only, under regulations which the Secretary of the Treasury is hereby authorized to prescribe, and when so imported shall be subject to the duties which are now or may hereafter be imposed by law.

"Sec. 2. That if any person shall fraudulently or knowingly import or bring into the United States, or assist in so doing, any opium or any preparation or derivative thereof contrary to law, or shall receive, conceal, buy, sell, or in any manner facilitate the transportation, concealment, or sale of such opium or preparation or derivative thereof after importation, knowing the same to have been imported contrary to law, such opium or preparation or derivative thereof shall be forfeited and shall be destroyed, and the offender shall be fined in any sum not exceeding five thousand dollars nor less than fifty dollars, or by imprisonment for any time not exceeding two years, or both. Whenever, on trial for a violation of this section, the defendant is shown to have, or to have had, possession of such opium or preparation or derivative thereof, such possession shall be deemed sufficient evidence to authorize conviction unless the defendant shall explain the possession to the satisfaction of the jury."

The first count of the indictment charged the unlawful manufacture of opium for smoking purposes and that the bond required by law had not been given. The second count charged the same offense, reciting that a bond with sureties satisfactory to the collector of internal revenue and in a penal sum of not less than $100,000 had not been given. The third count charged plaintiff in error with unlawfully being engaged in the manufacture of opium for smoking purposes, that he had failed to file with the collector of internal revenue of the district in which his manufactory was located the notices, inventories, and bonds, and had failed to keep the books and render the

returns, and to operate the business under the surveillance, required by the Commissioner of Internal Revenue, with the approval of the Secretary of the Treasury. The fourth count charged plaintiff in error with the unlawful manufacture of two pounds of opium for smoking purposes and that he failed to stamp the opium in such a permanent manner as to denote the payment of the internal revenue tax thereon. The fifth count charged that plaintiff in error imported and brought into the United States a large quantity of opium not for medicinal purposes, under regulations prescribed by the Secretary of the Treasury. The sixth count charged plaintiff in error with unlawfully receiving and concealing smoking opium which had previously been imported into the United States contrary to law.

From the record it appears that, when the officers arrested plaintiff in error, there was found upon the premises in which the arrest was made several pails of opium in different stages of manufacture, five pounds of crude opium wrapped in a leaf, certain utensils used in the manufacture, sale, and use of opium, and several smoking outfits. This was on March 3, 1914, or 46 days after the act upon which counts 1, 2, 3 and 4 are based was approved. The government chemist identified the opium so seized as crude gum opium, the aqua solution of gum opium, opium in all its various stages of manufacture, the finished product, and smoking opium. These analyses were before the jury. Plaintiff in error admitted he was the boss. He was pointed out by the man in charge as the boss. He produced the keys to the several drawers from his pocket, and otherwise held himself out as the proprietor, though he later denied that he was.

Plaintiff in error's motions at the close of the government's evidence and of all the evidence to direct a verdict were denied. He was found guilty upon all the counts of the indictment, and was sentenced to five years' imprisonment in the penitentiary at Joliet, Ill., from which judgment of the court this writ of error was taken.

The errors assigned are:

(1) The overruling of the motions to direct a verdict, both at the close of the government's case and at the conclusion of all the evidence.

(2) The evidence fails to show that plaintiff in error manufactured opium without giving bond as required, or that he manufactured opium for smoking purposes after the statute went into effect, or at all.

(3) The evidence fails to show that plaintiff in error knowingly or otherwise imported gum opium, or that he concealed such opium knowing that it was wrongfully imported, or that same had been in his possession contrary to law.

(4) There was produced no evidence to show what bond was required by the Commissioner with the approval of the Secretary of the Treasury.

(5) No evidence was produced as to the judicial and revenue districts in which the alleged crimes were committed.

(6) The court was without authority to instruct the jury as to such matters in the absence of evidence.

(7) The court admitted in evidence over objection an application and bill for gas pertaining to the premises occupied by plaintiff in error.

(8) The jury failed to specify the counts under which the jury found plaintiff in error guilty.

(9) The said acts of Congress are unconstitutional.

(10) The judgment and sentence of the court are excessive and unwarranted under the law and the evidence and the verdict.

William A. Morrow and Charles F. Hille, both of Chicago, Ill., for plaintiff in error.

Charles F. Clyne and Joseph B. Fleming, both of Chicago, Ill., for the United States.

Before BAKER, KOHLSAAT, and MACK, Circuit Judges.

KOHLSAAT, Circuit Judge (after stating the facts as above). [1] The crime charged in the first count is the manufacture of opium for

smoking purposes by appellant without giving the bond required by law for such manufacture. The statute calls for "the bond required by the Commissioner of Internal Revenue." It does not appear from the indictment or in the evidence that the Commissioner had required any such bond. At the date of the offense charged, less than 60 days had elapsed since the passage of the act under which the indictment was found. The authority of the United States to prohibit or regulate the manufacture of smoking opium within a state, when that act is not otherwise unlawful, must rest upon the right to exercise its taxing power as to matters within the states. Those coming within the operation of such powers of the government are entitled to have the duties and obligations thereby imposed made so clear and certain that they can be readily complied with, and the penalties avoided. It does not appear that this has been done in the present instance. If no such bond had been required by the Commissioner of Internal Revenue, appellant was not in default in not giving the bond set out in the indictment. The government was bound to show that the Commissioner had by regulation required a bond and what it called for. This it has not done. We are unable to see how appellant could be held for failure to comply with regulations which had never been promulgated.

The offense of count 2 is the failure of appellant to give "the bond required by law to be given by a manufacturer of opium, to wit, a bond with sureties satisfactory to the collector of internal revenue and in a penal sum of not less than $100,000." By the statute this bond must be such as the Commissioner of Internal Revenue, with the approval of the Secretary of the Treasury, may by regulation require. No such regulation is either alleged or shown, and therefore, so far as the record discloses, there was no means whereby appellant could have complied with the statute.

[2] The offense charged in count 3 is the failure of appellant to file with the collector of internal revenue of his district the notices, inventories, and bonds, and his failure to keep such books and to render such returns of material and product, and to put up such signs and affix such number to his factory, and conduct his business under such surveillance of officers and agents as required by the Commissioner of Internal Revenue, with the approval of the Secretary of the Treasury, by regulations made by said Commissioner of Internal Revenue under authority of law. That any such regulations had been made was neither charged nor proven. Appellant was convicted of failure to comply with regulations which, so far as is disclosed in the record, never existed. The burden was upon the government to show what these regulations were and the infraction thereof by appellant.

[3] The crime set out in the fourth count of the indictment was the failure to stamp the said opium in such a permanent manner as to denote the payment of the internal revenue tax thereon. The failure to stamp is a different offense from the failure to pay the tax. The indictment does not allege, nor does the record disclose, that there existed any stamp or that the Commissioner of Internal Revenue with the approval of the Secretary of the Treasury had by regulation required any stamp for such purpose. Appellant could not be held for

the failure to apply and cancel a stamp which never existed. If it did exist, it rested upon the government to show that fact.

The fifth and sixth counts are not supported by any proof whatever tending to show that the opium referred to in these counts was imported contrary to law. There is absolutely no evidence to otherwise sustain either of them.

While the evidence would, in our judgment, sustain the charge that before and at the time of the seizure of the plant appellant was a manufacturer of opium within the meaning of section 1 of the act of 1914, it entirely fails to establish any of the offenses charged in the indictment.

The judgment of the District Court is therefore reversed, with direction to sustain appellant's motion for a new trial.

In re DESNOYERS SHOE CO.

SANGAMON LOAN & TRUST CO. v. UNITED SHOE MACHINERY CO.

(Circuit Court of Appeals, Seventh Circuit. October 5, 1915.)

No. 2236.

1. BANKRUPTCY ⟹318—PROVABLE CLAIMS—OBLIGATIONS ARISING BECAUSE OF BANKRUPTCY.

The claimant leased machinery by leases which provided that, if the lessee became bankrupt, the leases should at the option of the lessor cease and determine; that upon any breach by the lessee of any of the conditions therein the lessor should have the right by notice in writing to terminate the leases; that upon the termination of the leases the lessee should deliver the machinery to the lessor at B. in good order, reasonable wear and tear excepted, and should thereupon pay certain amounts as reimbursement for deterioration, etc. Some of the leases also provided for the payment of the amount necessary to repair the machines for use by another lessee. The lessee became bankrupt, and the lessor served a notice that "we have elected and hereby declare our option to terminate" the leases, and that the "leases are hereby terminated." *Held* that, as notice or re-entry was not required when the leases were terminated because of bankruptcy, the termination was coincident with the bankruptcy, and the obligation to pay the return charges, repair charges, and freight expenses was a fixed liability absolutely owing at the time of the bankruptcy, notwithstanding the uncertainty as to the existence of such obligation until the lessor manifested its election to treat the leases as broken.

[Ed. Note.—For other cases, see Bankruptcy, Cent. Dig. §§ 481, 482; Dec Dig. ⟹318.]

2. BANKRUPTCY ⟹318—PROVABLE CLAIMS—OBLIGATIONS ARISING BECAUSE OF BANKRUPTCY.

The filing of the lessor's claim evidenced its intention to treat the leases as canceled by the bankrupt.

[Ed. Note.—For other cases, see Bankruptcy, Cent. Dig. §§ 481, 482; Dec. Dig. ⟹318.]

3. BANKRUPTCY ⟹318—PROVABLE CLAIMS—OBLIGATIONS ARISING BECAUSE OF BANKRUPTCY.

The notice of termination of the leases served by the lessor was not intended to make the cancellation effective only from the date of service,

⟹For other cases see same topic & KEY-NUMBER in all Key-Numbered Digests & Indexes

but to evidence an election theretofore made, and was not inconsistent with a holding that the lessor's claim was a fixed liability absolutely owing at the time of the bankruptcy.

[Ed. Note.—For other cases, see Bankruptcy, Cent. Dig. §§ 481, 482; Dec. Dig. ⚷318.]

4. BANKRUPTCY ⚷312—CLAIMS—LOSS OF RIGHT—LEASES OF PERSONAL PROPERTY.

Actual redelivery of the machinery to the lessor at B. was not a condition precedent to the payment of the return charges, and a waiver of the obligation to ship them to B., and an acceptance of them at the lessee's factory, followed by a letting of them to a third party, did not release the claim for such charges.

[Ed. Note—For other cases, see Bankruptcy, Cent. Dig. §§ 496–500; Dec. Dig. ⚷312.]

Appeal from the District Court of the United States for the Southern Division of the Southern District of Illinois; Arthur L. Sanborn, Judge.

In the matter of the Desnoyers Shoe Company, bankrupt. From an order allowing the claim of the United Shoe Machinery Company, the Sangamon Loan & Trust Company, trustee in bankruptcy, appeals. Affirmed.

See, also, 227 Fed. 16, — C. C. A. —.

The bankrupt leased shoe machinery from the claimant under numerous leases dated on and after 1904. They contained, among others, the following provisions:

"(1) The leased machinery shall at all times remain and be the sole and exclusive property of the lessor and the lessee shall have no right of property therein, but only the right to use the same upon the conditions herein contained. * * * If the lessee becomes insolvent or bankrupt, or has a receiving order made against him, * * * then and in each such case any or all leases of or licenses to use machinery then existing between the lessor and the lessee * * * shall at the option of the lessor cease and determine, and the possession of and full right and control of all machinery the leases or licenses of which are so terminated, shall thereupon revest in the lessor free from all claims and demands whatsoever."

"(10) The term of this agreement shall be 17 years from the date hereof. The lease of and license to use the leased machinery and the clicking machine dies of the lessor shall continue, unless sooner terminated by the lessor because of breach on the part of the lessee, or otherwise as in this agreement, provided, for the full term of this agreement. But if any breach or default shall be made in the observance of any one or more of the conditions herein contained * * * obligatory upon the lessee, the lessor shall have the right, by notice in writing to the lessee, to terminate forthwith any or all leases of or licenses to use machinery then in force between the lessor and the lessee. * * * If upon the expiration of the full term of this agreement, the lessor does not request the return of the leased machinery, then the leased machinery and dies shall continue to be held and used under and in accordance with the conditions, stipulations, and provisions in this agreement contained, and this agreement and the lease and license herein contained shall thereupon be extended indefinitely as to term; but thereafter either the lessee or the lessor, upon 60 days' notice in writing to the other, may terminate this agreement and the lease and license herein contained, whereupon the leased machinery shall be delivered forthwith to the lessor, as herein provided.

"(11) Upon the expiration of this agreement or any extension thereof or the termination of the lease and license herein contained, the lessee shall forth-

with deliver the leased machinery to the lessor at Beverly, Mass., in good order, reasonable wear and tear alone excepted."

In some of the leases, designated as "Form 1," paragraph 11 continues as follows:

"And shall thereupon pay to the lessor without prejudice to any other rights or remedies of the lessor the sum of one hundred dollars ($100) in respect to each machine hereby leased as partial reimbursement to the lessor for deterioration of the leased machinery, expenses in connection with the installation thereof and instruction of operators."

Form 2 has the following return charge clause:

"(7) Independently of and in addition to all other payments herein provided for the lessee upon the expiration or termination of the lease hereby granted or any extension thereof shall pay to the lessor in respect to each machine hereby leased the amount set opposite the name of such machine in column numbered 'III' in the 'Schedule of Machines' hereinbefore contained: Provided, however, that in case at all times prior to such expiration or termination the lessee shall have faithfully kept, observed and performed all of the conditions, terms, agreements, stipulations, and provisions of this lease and license agreement, and of all other leases and licenses and agreements between the lessor and the lessee, and is not in default in respect to any payment or otherwise hereunder or thereunder, and shall promptly and fully carry out all obligations incumbent upon the lessee upon such expiration or termination, the payment in this article hereof provided to be made in respect to each such machine shall be reduced by an amount equal to one-half of the annual payments theretofore made by the lessee to the lessor in respect to such machine under the provisions of article 6 hereof; or in case one-half of such annual payments theretofore made by the lessee to the lessor in respect to such machine equals or exceeds the payment in this article hereof provided to be made in respect thereto then said payment under this article hereof in respect to said machine shall be waived."

The return charge clause in Form 3 reads as follows:

"Upon the expiration or termination of this agreement or any extension thereof, or of the lease and license hereby granted, the lessee, in addition to all other payments in this agreement provided for and without prejudice to any other rights or remedies of the lessor, shall pay to the lessor as partial reimbursement to the lessor for deterioration of the leased machinery, expenses in connection with the installation thereof and instruction of operators, an amount in respect to each machine hereby leased equal to two-thirds of the sum set opposite the name of such machine in the column numbered 'I' in the Schedule of Machines hereinbefore contained: Provided, however, that in case the lease and license hereby granted shall continue throughout the full term of 17 years hereinbefore provided for as the full term of this agreement and the lessee at the time of returning the leased machinery at the end of said full term shall not be in default as to any of the payments under or other conditions, stipulations, or provisions of this or any other lease or license agreement between the lessor and the lessee, then the payment in this article hereof provided for shall not be required to be made."

This form has in addition a repair charge clause as follows:

"Upon the expiration or termination of this agreement or any extension thereof or of the lease and license herein contained, the lessee shall forthwith deliver the leased machinery to the lessor at Beverly, Mass., in good order, reasonable wear and tear alone excepted, and shall thereupon pay to the lessor without prejudice to any of the rights or remedies of the lessor such sum as may be necessary to put the leased machinery in suitable order and condition to lease to another lessee."

The petition in bankruptcy was filed July 21, 1911; on July 26, 1911, a notice in reference to the termination of the leases was served on the bankrupt's receiver. The claim for the so-called "return charges" and for freight and repair expenses, rejected by the referee as conditional and therefore not provable in bankruptcy, was allowed by the District Court in the sum of over $20,000.

O. S. Humphrey and P. B. Warren, both of Springfield, Ill., for appellant.

Douglas W. Robert, of St. Louis, Mo., for appellee.

Before BAKER, KOHLSAAT, and MACK, Circuit Judges.

MACK, Circuit Judge (after stating the facts as above). [1] It has been held in numerous cases that bankruptcy does not create an anticipatory breach of a lessee's obligation to pay rent for realty, that the leasehold estate is not thereby terminated, and that if the lease expressly provides for forfeiture or cancellation because of the bankruptcy, but conditions the cancellation on notice and re-entry, a claim arising only after and in the event of such cancellation is not provable in the bankruptcy proceedings because it is conditional at the time the petition is filed. In re Ells (C. C.) 98 Fed. 967; Watson v. Merrill, 136 Fed. 359, 69 C. C. A. 185, 69 L. R. A. 719; In re Roth Appell, 181 Fed. 667, 104 C. C. A. 649, 31 L. R. A. (N. S.) 270; Slocum v. Soliday, 183 Fed. 410, 106 C. C. A. 56; Colman v. Withoft, 195 Fed. 250, 115 C. C. A. 222; Cotting v. Hooper, Lewis & Co., 220 Mass. 273, 107 N. E. 931.

Assuming, without deciding, that this is equally true of a leasehold of chattels, it would follow that bankruptcy of the lessee would not end the lease, and that if the reserved right to cancel it on bankruptcy were conditioned on notice to the lessee, a claim for moneys to become due at the termination of what is in form a 17-year, but in substance a perpetual, though terminable, lease, could not be allowed as a fixed liability absolutely owing at the time of the bankruptcy. Shaw v. United Shoe Machinery Co., 220 Mass. 486, 108 N. E. 68. And in Re Jorolemon-Oliver Co., 213 Fed. 625, 130 C. C. A. 217 (C. C. A. 2d Circuit), the court rejected a claim similar to the one now in question because it interpreted the lease as providing for termination only if and when notice should be served. Contra, In re D. C. Clark Shoe Co., 211 Fed. 341 (D. C. Mass.).

It is to be noted, however, that the subject of the cancellation of these leases is dealt with in two separate paragraphs; in both the termination is at the lessor's option; if the right arises because of a breach or default by the lessee, notice in the form prescribed is made essential by the express provisions of the lease; but if because of insolvency or bankruptcy, no formal notice or re-entry is required.

If, then, these leases were ended, not because of the lessee's default or breach, anticipatory or otherwise, but because of its bankruptcy, the termination was coincident with the bankruptcy itself. Inasmuch as the lessor had an option to maintain the leases in full force notwithstanding the bankruptcy, it was uncertain, until the lessor in some way manifested its election, whether or not the leases had terminated and the obligations conditioned thereon had become fixed and absolute. This uncertainty, however, was as to the existence, not as to the nature, of the liability. If, by reason of the election, the bankruptcy did end the lease, then the obligations were absolute as of the time that the petition in bankruptcy was filed.

The situation is exactly analogous to that arising on the repudiation of a contractual obligation. The obligee may accept or reject it as creating an anticipatory breach; until he manifests his election, it is uncertain whether or not the contract has been broken; if, however, he does elect to treat the repudiation as an anticipatory breach, it is not his election but the repudiation, express or constructive, that creates the breach and the liability to respond therefor in damages. In those cases in which bankruptcy is held to be a constructive repudiation, and thus to enable the obligee to elect to regard it as an anticipatory breach of contract, he may file his claim for damages in the bankruptcy proceedings because the breach is occasioned by, and thus the claim arises coincident with, and not after, the bankruptcy, and is unconditional at that time; and this, too, notwithstanding the uncertainty, until the election is manifested, whether or not any breach has been in fact committed, and therefore whether or not any claim or liability therefor in fact exists. In re Scott Transfer Co., 216 Fed. 308, 132 C. C. A. 452; contra, In re Montague & Gillet, Inc., 212 Fed. 452, 32 Am. Bankr. Rep. 106 (D. C. S. D. New York). Because the obligee is not bound to consider repudiation before maturity as a breach, but may continue to treat the contract as in full force, the obligor's discharge in bankruptcy has been held to be no defense to an action for the later actual breach of a conditional obligation at its maturity. Phenix National Bank v. Waterbury, 197 N. Y. 161, 90 N. E. 435.

[2] As the uncertainty in regard to the existence of a liability is due solely to the inability or failure of the obligee to manifest his election at the instant of bankruptcy or other breach, and as his right of action arises at once at the moment of the anticipatory breach, his subsequent election by suing or filing a claim is properly given retroactive effect in the absence of any act inconsistent therewith. And similarly in this case: By its express provisions, bankruptcy terminated the lease at the lessor's option; the filing of the claim evidenced the lessor's election to treat the lease as canceled by the bankruptcy; the obligations contingent on termination thus became fixed, absolute, and certain, coincident with the filing of the bankruptcy petition.

[3] While no notice was required, the one actually served on the bankrupt's receiver a few days after the petition in bankruptcy was filed is not inconsistent with this position; though it states that the "leases are hereby terminated," it begins with a notification that "we *have* elected and hereby *declare* our option to terminate" all leases; in our judgment, it was intended, not to make the cancellation effective only from the date of service, but to evidence an election theretofore made, and to notify the parties that the lessor's rights resulting therefrom would be enforced.

[4] The so-called return charges, as well as freight and repair expenses, became absolutely due and payable on the termination of the leases; that is, at bankruptcy. Actual redelivery at Beverly was not a condition precedent to the payment of the fixed sum of $100 per machine, specified in "Form 1." A waiver of the obligation to ship some of them to Beverly, and the acceptance at the bankrupt's factory

and subsequent letting to a third party, cannot be deemed a release of the claim for this $100 per machine.

The judgment of the District Court allowing the claim in full for the return charges and the actual freight and repair expenses, stipulated to be a reasonable charge therefor, on the machines returned to Beverly, must be affirmed.

UNG BAK FOON v. PRENTIS.

(Circuit Court of Appeals, Seventh Circuit. October 5, 1915.)

No. 2177.

1. ALIENS ⚷32—DEPORTATION PROCEEDINGS—JUDICIAL REVIEW.

In determining whether an alien is lawfully in the United States, the hearings before the administrative officers charged with the execution of the statute are conclusive when fairly conducted; and the conclusions and orders made upon such hearings are not subject to judicial review, unless it be shown that the proceedings were manifestly unfair, that the action of the officers was such as to prevent a fair investigation, or that there was a manifest abuse of the discretion committed to them by the statute.

[Ed. Note.—For other cases, see Aliens, Cent. Dig. §§ 84, 92-95; Dec. Dig. ⚷32.]

2. ALIENS ⚷32—DEPORTATION PROCEEDINGS—HEARINGS.

A Chinese person, when arrested, was examined by an immigration inspector, and then stated that he was born in China and smuggled into the United States. On a further hearing, when he was represented by counsel, he repudiated these statements, and claimed to be of American birth, and his testimony to that effect was corroborated. *Held* that, his statements on the first hearing not having been made under duress, nor procured through any abuse of power on the part of the immigration inspector, it was not a denial of a fair hearing to base an order of deportation upon his admissions at such hearing, as such a preliminary investigation as was made is proper and necessary to the efficient administration of the statute.

[Ed. Note.—For other cases, see Aliens, Cent. Dig. §§ 84, 92-95; Dec. Dig. ⚷32.]

3. ALIENS ⚷32—DEPORTATION—COUNTRY TO WHICH ALIEN SHOULD BE DEPORTED.

Immigration Act Feb. 20, 1907, c. 1134, 34 Stat. 904 (Comp. St. 1913, § 4269), provides in section 20 that any alien entering the United States in violation of law shall be deported to the country whence he came, and section 21 (section 4270) similarly provides regarding aliens found in the United States in violation of statute or subject to deportation. Section 35 (section 4284) provides that the deportation of aliens, arrested within the United States after entry and found to be illegally therein, shall be to the trans-Atlantic or trans-Pacific ports from which they embarked for the United States, or, if such embarkation was for foreign contiguous territory, to the foreign port at which such alien embarked for such territory. *Held*, that a Chinese person, embarking from Hong Kong for a point in Canada with the intent or design of entering the United States, was properly ordered deported to China, notwithstanding a stay of a few months in Canada.

[Ed. Note.—For other cases, see Aliens, Cent. Dig. §§ 84, 92-95; Dec. Dig. ⚷32.]

---

4. ALIENS ⟹32—DEPORTATION—COUNTRY TO WHICH ALIEN SHOULD BE DEPORTED.

A Chinese person embarked from Hong Kong for a point in Canada, and after a stay of a few months in Canada unlawfully entered the United States. It appeared that he had previously long resided in the United States, that he had come to this country from China on three different occasions, and that he had relatives and friends here with whom he had been engaged in business. *Held* that, presumptively, he intended to go to the United States, by the way of Canada, because that was what he actually did, and the circumstances, instead of tending against this presumption, supported it, and hence he was properly ordered deported to China, instead of Canada.

[Ed. Note.—For other cases, see Aliens, Cent. Dig. §§ 84, 92–95; Dec. Dig. ⟹32.

What Chinese persons are excluded from the United States, see note to Wong You v. United States, 104 C. C. A. 538.]

Appeal from the District Court of the United States for the Eastern Division of the Northern District of Illinois; George A. Carpenter, Judge.

Habeas corpus proceeding by Ung Bak Foon against P. L. Prentis, Inspector. From a judgment discharging the writ, petitioner appeals. Affirmed.

Appellant, a Chinese person, by habeas corpus proceedings in the District Court sought to be released from the custody of the immigration authorities at Chicago, where he is held by virtue of a warrant of deportation issued by the Acting Secretary of Labor, dated April 2, 1914. The District Court discharged the writ, and the petitioner prosecuted this appeal.

On the day of his arrival in Chicago, January 9, 1914, appellant was taken into custody, and was examined under oath by an immigration inspector with a view to determining whether or not he was lawfully within the United States. The examination was conducted through an official Chinese interpreter, and in answer to questions put to him appellant stated, among other things, that he was born in China, in the village of Mon Low, Sun Woey district, and first came to the United States in the year 1893, when he was about 20 years of age; that at that time he arrived at Portland, Or., and gained admission to this country upon a fictitious Chinese merchant's return certificate, which was procured for him by his father in China; that with the exception of a visit to his home in 1898, he had lived in the United States continuously until 1909, and that he was associated with relatives and friends in the laundry and restaurant business in various cities; that in 1909 he left Chicago and returned to China, and in the following year, 1910, went to Mexico, where he remained but one month, returning to China, and in 1913 arrived at Victoria, Canada, from Hong Kong; that he worked a few months in Victoria and in Toronto, and then went on to Windsor, from where he was smuggled into the United States, coming to Chicago on a freight train by arrangement with one Lee Suey Sing at Windsor, to whom he paid $20 and promised to send $180 more if he arrived safely at his destination in Chicago.

On February 10, 1914, a further hearing was granted appellant, to show cause why he should not be deported. At this hearing he was represented by counsel, and several witnesses were produced. He then testified that he was born in San Francisco, Cal., and was taken to China by his parents when he was 10 years old. He disowned his earlier statements that he was born in China and that he was smuggled into the United States, claiming that he could not understand the questions put to him on his previous examination, although he spoke through the same interpreter on both occasions. As to the manner of his coming to this country from China at the age of 20 years, and as to his subsequent movements in the various cities of the United States, and in other respects, his testimony coincided with the statements he made on the

day of his arrest. He denied, however, having returned to China in 1909, and testified that in 1910 he left Chicago, intending to go to New York, but that through some mistake in the purchase of a railroad ticket he boarded a train which carried him to Canada, from where he was unable to gain entrance to the United States and therefore remained in Canada until his recent coming to Chicago. He denied that he entered this country surreptitiously, and testified that, on representing himself to be an American citizen to a white person at Windsor, the latter for a consideration of $5 secured his transportation to Chicago; that the journey to Chicago was made on a "slow passenger train," he being the only passenger, and that he was not examined by an immigration officer at the time he entered the United States.

Ng You and Mun Hawk were called to corroborate appellant's testimony as to his American birth. Ng You testified that he had known appellant in San Francisco from the time he was 1 or 2 years old until he was of the age of 10 years when his parents took him to China; that he was told by appellant's parents that appellant was born in San Francisco. He further testified that he again saw appellant some 10 years later, in New York, and had also seen him in Chicago some 4 or 5 years prior to the hearing. Mun Hawk testified that he lived in San Francisco from 1871 to 1884, on the second floor of the same building in which appellant was born, and was living there at the time of appellant's birth. On cross-examination, he testified that he only lived at this place when he was out of work, and that he was absent most of the time working on a farm; that he was never on the third floor, where appellant and his parents lived, but saw him frequently running about in his father's store on the first floor of the building, and that he was living there at the time appellant, at the age of 9 years, was taken to China by his father and mother; that from that time until appellant's coming to Chicago from Windsor he had seen him but once—in New York some 20 years before the date of the hearing. H. C. Dana and Joe On corroborated appellant's testimony to the effect that during the years 1909 and 1910 he was living in Chicago. On the day of his arrest he stated that he left Chicago in 1909.

With all this evidence before him, the Acting Secretary of Labor found that appellant entered the United States in violation of section 36 of the act of Congress of February 20, 1907 (34 Stat. 898, c. 1134 [Comp. St. 1913, § 4285]), in that he had entered without inspection, and accordingly issued a warrant for his deportation to China. On the hearing of the petition for a writ of habeas corpus and the return thereto, which embodied all the prior proceedings, the petition charging that petitioner was denied a fair hearing by the immigration officers, the District Court upon this record discharged the writ, as before stated, and remanded the petitioner to the custody of the immigration authorities.

The errors relied upon are: The court erred in discharging the writ, because (1) the evidence showed appellant to be a citizen of the United States; and (2) appellant could not in any event, under all the evidence, be deported to China, but only to Canada.

E. G. Godman, of Chicago, Ill., for appellant.

Charles F. Clyne and John E. Byrne, both of Chicago, Ill., for appellee.

Before BAKER, KOHLSAAT, and MACK, Circuit Judges.

KOHLSAAT, Circuit Judge (after stating the facts as above). [1] It has been settled by numerous decisions of the Supreme Court, as well as the other federal courts, that for the purpose of determining whether an alien is lawfully in the United States, the hearings before the administrative officers charged with the execution of the act are conclusive when fairly conducted, and that the conclusions and orders made upon such hearings are not subject to judicial review, except it

be shown that the proceedings were manifestly unfair, that the action of the officers was such as to prevent a fair investigation, or that there was a manifest abuse of the discretion committed to them by the statute. Low Wah Suey v. Backus, 225 U. S. 460, 32 Sup. Ct. 734, 56 L. Ed. 1165, Prentis v. Di Giacomo, 192 Fed. 467, 112 C. C. A. 605, and cases cited.

[2] Appellant in his petition for a writ of habeas corpus averred that he was denied a fair hearing by the immigration authorities. This charge was based solely upon the alleged incompetency of certain evidence included in the record which formed the basis of the order of deportation issued by the Acting Secretary of Labor; and it is contended that had this evidence been excluded the record would show that appellant was born in the United States and therefore is an American citizen and not deportable. The alleged incompetent evidence consisted of the statement made by appellant at the time of his apprehension, wherein he swore, as above stated, that he was born in China and was smuggled into this country. These admissions were not made under duress nor procured through an abuse of power on the part of the immigration inspector. Preliminary investigation such as was here made is proper and necessary to the efficient administration of the statute, and, as said in United States v. Moy Toom (D. C.) 224 Fed. 520:

"It tends greatly to elucidate the truth to hear what the Chinese person has to say about such simple facts as his age, parentage, relationships, occupation, and localities where he has lived, and the circumstances attending his latest entry into this country, *before* his lawyer appears."

We held in Prentis v. Seu Leung, 203 Fed. 25, 121 C. C. A. 389, that such a proceeding constitutes a part of the hearing contemplated by the act. We are not concerned with the weight of the evidence. The Secretary of Labor no doubt regarded the testimony of the witnesses in corroboration of appellant's claim of American birth as not being of such a convincing character as to overcome appellant's original sworn statements and to furnish that degree of proof required to establish the citizenship of a person of Chinese descent; and we are unable to say that he was not justified in doing so.

[3, 4] It is next urged that the deportation warrant is illegal, because it directs that appellant be taken to China, whereas Canada is "the country whence he came." Sections 3, 20, 21 and 35 of the Act deal with the question of the place to which an alien found to be unlawfully in the United States, or to have forfeited his right to remain therein, shall be deported. Section 3 applies to aliens who have been convicted of certain criminal offenses. Section 20 provides:

"That any alien who shall enter the United States in violation of law,"

And section 21:

"That in case the Secretary of Commerce and Labor shall be satisfied that an alien has been found in the United States in violation of this act, or that an alien is subject to deportation under the provisions of this act," he shall be deported upon the warrant of the Secretary of Commerce and Labor to "the country whence he came."

And section 35 provides that:

"The deportation of aliens arrested within the United States after entry and found to be illegally therein, provided for in this act, shall be to the trans-Atlantic or trans-Pacific ports from which said aliens embarked for the United States; or, if such embarkation was for foreign contiguous territory, to the foreign port at which said aliens embarked for such territory."

Appellant embarked from Hong Kong, China, for Victoria, Canada, foreign territory contiguous to the United States, and was found to have entered this country in violation of the act. No proof was offered to show that his unlawful entry was not in pursuance of an intent or design to do so at the time he left Hong Kong. If he did have such intent, then manifestly China would still be the country whence he came to the United States, notwithstanding his temporary stay in Canada. If he merely crossed Canada on his way here from Hong Kong, he should be returned to that port. Lewis v. Frick, 233 U. S. 291, 303, 34 Sup. Ct. 488, 58 L. Ed. 967. Nor would the fact that several months intervened the time of his landing in Canada and his unlawful entry into the United States change the situation if he eventually carried out his purpose. Presumptively, he did intend to come to this country by way of Canada from China, because that is what he actually did. The evidence in the record in no way tends against this presumption, but supports it. His long residence in the United States, covering a period of more than 16 years, that he came here from China on three different occasions, that he had relatives in this country, as he testified, and friends, with whom he had been engaged in business, and his brief stay in Canada, are circumstances which lend support to the presumption that his objective point when he left China was the United States. All of his testimony evidences an intention on his part to leave Canada and come into this country as soon as opportunity offered.

In Ex parte Wong You (D. C.) 176 Fed. 933, it was found that the Chinese aliens whose cases were under consideration had embarked from Hong Kong, China, for the Dominion of Canada intending to surreptitiously enter the United States, which they did, and it was held that under such circumstances they were properly deported to Hong Kong, instead of Canada. This case was cited with approval by the Supreme Court in Lewis v. Frick, supra. To like effect are Ex parte Li Dick (C. C.) 176 Fed. 998, and Ex parte Hamaguchi (C. C.) 161 Fed. 185, also cited in the Lewis v. Frick Case, supra.

The judgment of the District Court is affirmed.

ELGIN, J. & E. RY. CO. v. UNITED STATES.

(Circuit Court of Appeals, Seventh Circuit. October 5, 1915.)

No. 2217.

MASTER AND SERVANT ⚷17—INTERSTATE COMMERCE ACT—VIOLATIONS—PENALTIES.

Commerce Act (Act Feb. 4, 1887, c. 104) § 10, 24 Stat. 382 (Comp. St. 1913, § 8574), provides that carriers willfully doing or causing, or suffering or permitting to be done, anything prohibited or declared unlawful by that act, or willfully omitting or failing to do anything required to be done, etc., shall be deemed guilty of a misdemeanor. Section 20 (Act June 29, 1906, c. 3591, § 7, 34 Stat. 593), prior to 1910, authorized the Interstate Commerce Commission to require annual reports containing statistical information, and provided that any carrier, failing to make and file such report within the time specified for making it, should forfeit $100 for each day it should continue in default. As amended in 1910 (Act June 18, 1910, c. 309, § 14, 36 Stat. 555 [Comp. St. 1913, § 8592]), it further authorizes the Commission to require periodical and special reports concerning matters about which it is authorized or required to inquire, and provides that any carrier failing to make and file any such report shall be subject to the forfeitures mentioned. The Commission required carriers subject to the Hours of Service Act (Act March 4, 1907, c. 2939, 34 Stat. 1415 [Comp. St. 1913, §§ 8677–8680]), to report instances where employés had been on duty for a longer period than that provided in the act, and defendant filed a report, but omitted certain instances of service in excess of the time permitted. *Held*, that the penalty prescribed by section 20 does not extend to omissions from or misstatements in reports filed in due time, whether willful or accidental, as, though accurate reports are expected and required, a willfully false sworn report subjects the affiant to the penalties for perjury, and the carrier to indictment under section 10, and these are the statutory safeguards designed to assure the required accuracy.

[Ed. Note.—For other cases, see Master and Servant, Cent. Dig. § 16; Dec. Dig. ⚷17.]

In Error to the District Court of the United States for the Eastern Division of the Northern District of Illinois; Kenesaw M. Landis, Judge.

Action for penalties by the United States against the Elgin, Joliet & Eastern Railway Company. Judgment for plaintiff, and defendant brings error. Reversed and remanded.

By this writ of error the Elgin, Joliet & Eastern Railway Company seeks to reverse a judgment of $3,000 on a directed verdict, based on 30 counts, each charging a violation of an order of the Interstate Commerce Commission, issued on June 28, 1911, and made pursuant to section 20 of the Act to Regulate Commerce as amended in 1910.

Prior to 1910, section 20 authorized the Commission to require annual reports under oath containing a vast amount of statistical information, and provided that "if any carrier * * * shall fail to make and file said annual reports within the time above specified, or within the time extended by the Commission for making and filing the same, * * * such party shall forfeit to the United States the sum of one hundred dollars for each and every day it shall continue to be in default with respect thereto." 34 Stat. 593, § 7.

By the amendment, the following clause was added: "The Commission shall also have authority by general or special orders to require said carriers * * * to file * * * both periodical and special reports concerning any matters about which the Commission is authorized or required by this or any

other law to inquire or to keep itself informed or which it is required to enforce; and such periodical or special reports shall be under oath whenever the Commission so requires; and if any such carrier shall fail to make and file any such periodical or special report within the time fixed by the Commission, it shall be subject to the forfeitures last above provided." 36 Stat. 556, § 14.

The Hours of Service Act (34 Stat. 1416 [Comp. St. 1913, § 8678]), which the Commission is required to enforce, provides that no train dispatcher "shall be * * * permitted to be or remain on duty for a longer period than nine hours in any twenty-four hour period * * * except in case of emergency, when the employés named * * * may be permitted to be and remain on duty for four additional hours * * * on not exceeding three days in any week."

The Commission's order, as set out in the declaration and stipulation of facts on which the case was heard, reads as follows: "It is ordered, that all carriers subject to the provisions of the act entitled 'An act to promote the safety of employés and travelers upon railroads by limiting the hours of service of employés thereon,' approved March 4, 1907, report within 30 days after the end of each month under oath, all instances where employés subject to said act have been on duty for a longer period than that provided in said act."

The declaration charged that the defendant, "having theretofore failed to make and file with said Commission in any form whatsoever a report of all the instances wherein its employés subject to" the Hours of Service Act were on duty in "December, 1912, for a longer period than that provided in said act, did, on the 1st day of February, 1913, continue to be in default with respect thereto and did fail to make and file with said Commission any report of the following instances" alleging specific instances of service in excess of nine hours.

The stipulated facts showed that the employés in question had been in service more than nine, but less than thirteen, hours for three consecutive days in December, 1912; that for December, 1912, the form of report required by the Commission was made within thirty days and that it contained no reference to the excess hours in question. The court rejected defendant's offer to prove the facts which it claimed constituted an emergency within the statute, and its further offer to prove its belief that the facts did constitute a statutory emergency, and that these instances were omitted from the regular monthly report only because of the good faith understanding and belief of defendant's chief dispatcher, whose duty it was to make, and who in fact made, the reports, that under the Commission's order there was no obligation to include these instances, and that the omission was not due to any intention to evade either the Hours of Service Act or the Commission's order.

John R. Cochran, of Chicago, Ill., for plaintiff in error.

Charles F. Clyne and Frederick Dickinson, both of Chicago, Ill., and Philip J. Doherty, of Washington, D. C., for the United States.

Before BAKER, KOHLSAAT, and MACK, Circuit Judges.

MACK, Circuit Judge (after stating the facts as above). While questions as to the scope of the Commission's order and the existence of an emergency have been fully presented, we find it unnecessary to determine them, in view of the conclusions which we have reached as to the construction of section 20.

The section originally required annual reports from carriers. A mass of detailed statistical information was to be included therein. Accurate information was, of course, desirable. Whoever was charged with the duty of preparing and swearing to such a report must necessarily, however, rely upon the statement of others and upon doc-

uments and statistics. Clerical errors might readily occur; both the facts and the law applicable thereto might be uncertain, and give rise to what might ultimately be held a mistaken interpretation.

While Congress undoubtedly expected and required an accurate report, it did not, in this section, prescribe a penalty for failure to make the report absolutely exact, but for failure to make and file a report within a specified time. Errors and omissions, whether accidental or willful, might readily escape detection by the executive officials of the carrier and by the Commission; but a failure to file any annual report within the fixed period would be quickly discovered. The penalty of $100 for each day's delay in filing the report would be sufficient to compel prompt attention to such a requirement.

A willfully false sworn report would subject the affiant to the penalties for perjury and the carrier to indictment under section 10 of the act. These were the express statutory safeguards designed to assure the required accuracy. But in the absence of a clear expression of such intention it will not be presumed that Congress purposed inflicting on the carrier such a penalty as $100 a day for the innocent omission or innocent misstatement of some one of the thousands of facts required to be reported annually. No such expression appears in, and no such intention is to be gathered from, the words of the statute.

The penalty prescribed is not for filing a false or erroneous report; unlike the acts considered in 134,901 Feet of Pine Lumber, 4 Blatchf. 182, Fed. Cas. No. 10,523, and The Ship Anna, 1 Dall. 197, 1 L. Ed. 98, the statute does not expressly characterize the required report as a *true* report, and punish the failure to make such a report; what it penalizes is the delay in filing any report of the general character specified in the act. To interpret the penal clause broadly as covering a failure not merely to file a report, but also to include therein each item with absolute accuracy, would violate the fundamental rules for the construction of penal statutes, and, in case the error remained undiscovered for a long time, would subject the carrier to enormous and entirely disproportionate penalties.

The amendment of 1910 emphasizes this construction; it repeats the words of the original clause; it again exacts the penalty for the delay in filing the required report, not for omissions therefrom. While the likelihood of clerical errors, and perhaps of mistakes either of law or of fact, may be less in periodical or special reports than in the general annual report, the amendment is to be construed in harmony with the original act; so construed, it cannot be held to extend to omissions from or misstatements in the periodical report filed in due time, whether such omissions or misstatements be willful or accidental.

We concur fully in the opinion rendered by Judge Sanborn in U. S. v. N. P. Ry. Co., 213 Fed. 162, — C. C. A. — (C. C. A. 8th Circuit), followed in O.-W. R. & N. Co. v. U. S., 222 Fed. 887, — C. C. A. — (C. C. A. 9th Circuit). Compare, too, U. S. v. Four Hundred and Twenty Dollars (D. C.) 162 Fed. 803.

As the sufficiency of the declaration has not been and is not questioned by plaintiff in error, it may be construed, especially after ver-

dict, as charging in substance that no report of service for December, 1912, was rendered; this averment, however, is contrary to conceded facts. A verdict for defendant should have been directed.

The judgment will be reversed, and the cause remanded for retrial.

STANDARD SCALE & SUPPLY CO. v. REITER.

(Circuit Court of Appeals, Seventh Circuit. October 5, 1915.)

No. 2161.

1. EVIDENCE ⟹441—PAROL EVIDENCE TO VARY WRITING.

A contract by which plaintiff was employed as general manager of defendant's branch store contemplated the establishing of side lines to be handled by such store, but did not specify which party was to do this. It was claimed that plaintiff represented that he would be able to sell a certain amount of goods in such side lines, but no promise to do so was included in the contract, and it appeared that plaintiff distinctly refused to have it included. *Held* that, while evidence that it was intended by the parties that the establishing of side lines should be within the duties of the general manager was admissible, evidence of a distinct, separate promise to sell a certain amount of goods was inadmissible, and there was no specific obligation on plaintiff to produce any specific volume of business.

[Ed. Note.—For other cases, see Evidence, Cent. Dig. §§ 1719, 1723–1763, 1765–1845, 2030–2047; Dec. Dig. ⟹441.]

2. MASTER AND SERVANT ⟹50—CONTRACTS OF EMPLOYMENT—CONSTRUCTION.

A contract by which plaintiff was employed as manager of defendant's branch store recited that defendant was to open a branch house for the sale of its scales and other goods, "such as" gasoline engines and others mentioned, followed by "etc." There was evidence that it was intended by the parties that the establishing of these side lines should be a part of the manager's duties. *Held*, that there was no requirement, in the sense of a specific obligation, to establish any specific number of side lines, and the court properly so charged.

[Ed. Note.—For other cases, see Master and Servant, Cent. Dig. § 64; Dec. Dig. ⟹50.]

In Error to the District Court of the United States for the Eastern Division of the Northern District of Illinois; J. Otis Humphrey, Judge.

Action by Edward Reiter against the Standard Scale & Supply Company. Judgment for plaintiff, and defendant brings error. Affirmed.

This cause was reversed on the former hearing thereof, for the reason that the trial court excluded evidence tendered for the purpose of showing what were the duties of defendant in error as general manager under the terms of the contract between the parties, and not for the purpose of altering the legal effect of that contract. For contract and opinion, see 199 Fed. 91, 120 C. C. A. 141. On the retrial in the District Court, all the competent evidence offered to show what was the scope of the manager's duties was admitted, together with evidence of all that was said between the parties before the contract was signed, and of all that was done and left undone by defendant in error under the contract, tending to show whether or not he was competent, and whether or not he performed his duties with energy, skill, and ability, and had complied with the contract. This evidence was in substance the

same as that tendered on the first hearing. There was no question of fraud raised in procuring the contract.

It is the contention of plaintiff in error that the representations of defendant in error, made prior to the signing of the contract, as to what he thought he could do and what results he could attain, be, in substance, declared to be a part of the contract and of defendant in error's duties as general manager. It is in evidence, also, that at the time of the execution of the contract plaintiff in error sought to have said representations incorporated in the instrument and made conditions binding upon defendant in error, but that the latter refused to sign such a contract, claiming that he was tying himself up for eight years, and that both parties must take their chances. The enterprise proved a failure, largely because of defects in the scales supplied by plaintiff in error, it is claimed by defendant in error. Thereupon plaintiff in error declined to pay to defendant in error the salary reserved in the contract, and the latter brought this suit to recover the same, resulting in a verdict of $11,000 in favor of defendant in error, as set out in said former appeal.

At the close of the evidence herein the court proceeded to charge the jury, the following portion of which charge is assigned for the first ground of error herein: "I have already said that neither the jury nor the court can change this contract, or make any different contract between the parties than the one they have made for themselves. I have allowed evidence to go to the jury tending to show what were to be the duties of this man as general manager, and you have heard from that evidence that his duties were to organize and establish a branch house for the defendant in Chicago. Now, there is nothing in the contract which would require him to attain any particular result; no requirement for profit; no requirement for any particular volume of business; no requirement for establishing any number of side lines. The requirement eked out of the oral testimony as adduced as to his duty in the final analysis was that he should in good faith exercise reasonable care and diligence and skill to do these things."

The second assignment of error is the refusal of the court to charge the jury as follows: "That if they find from the evidence that the plaintiff was employed by the defendant as general manager to organize and establish a branch house here in the city of Chicago for the sale of scales, and for the sale of other manufactured articles, not manufactured by the defendant, and that the plaintiff represented to the defendant that he was skilled in the sale of merchandise other than that manufactured by the defendant, and that he would obtain representation for these various articles mentioned by him to them; and which are mentioned in the contract, and that the volume of business which was to be done by him in these side lines would be not less than $200,000 a year, and that the defendants were ignorant as to these side lines, and believed that the plaintiff had the capacity to do as he promised, and, relying upon this, entered into the contract, and that, instead of establishing a branch house with the sale of $200,000 a year of merchandise outside of that manufactured by the defendant, only sold an amount less than $15,000 a year, then the plaintiff has not complied with his contract, and the defendant has a right to discharge him."

The jury rendered a verdict of $7,000 in favor of defendant in error, and judgment was entered thereupon accordingly.

W. S. Oppenheim, of Chicago, Ill., for plaintiff in error.
Edwin M. Ashcraft, of Chicago, Ill., for defendant in error.

Before BAKER, KOHLSAAT, and MACK, Circuit Judges.

KOHLSAAT, Circuit Judge (after stating the facts as above). [1] There is no suggestion in the opinion of this court in the former hearing of this case to the effect that conferences and communications with reference to the amount of business to be done, had previous to the signing of the contract in question, were competent, either to vary the

terms of the contract or to show what were the duties of the general manager. The contract contemplated that somebody should attend to the establishing of the side lines. It did not specify which of the parties was to do this. As this could properly fall within the duties of a manager, if so intended by the parties, evidence to show that they did so intend was admissible; but evidence of a distinct, separate promise to sell a certain amount of goods would be inadmissible, as bringing into the contract a new obligation, and one which Reiter had distinctly refused to have written therein.

[2] It is to be noted that the agreement did not provide that certain side lines and others unmentioned were to be established, but only that "such branch lines as," and then mentioning certain ones and adding thereafter "etc." The court stated that he had allowed evidence to go in showing what were the duties of this man as general manager, and that they were to organize and establish a branch house; that there was no requirement to attain any particular result, no requirement for profit, for any particular volume of business, for any number of side lines; that he should in good faith exercise reasonable care and diligence and skill to do these things.

The exception was "to the last instruction that there is no provision in the contract requiring him to establish any particular business, or any particular volume of business, and we will ask the court to instruct" that if defendant in error represented that he would obtain representation for these various articles mentioned in the contract, and that the volume would be not less than $200,000 a year, and that the contract was made in reliance on this, and he actually sold less than $15,000, then there was a right of discharge. The exception and the request must be read together, and they show that plaintiff in error's theory is that these alleged representations as to every article mentioned in the contract and as to the amount of business to be done were binding obligations. There was no error in charging that there was no requirement in the sense of specific obligation to establish any specific number of side lines or produce any specific volume of business. The oral testimony was not admitted for this purpose, and was not directed, in the former opinion, to be admitted for this purpose, but only for the purpose of showing in a general way the duties of the manager, or perhaps, also, the relative duties of manager and owner. This being so, there was no obligation to produce $200,000 worth of business, and, of course, the instruction asked for is clearly wrong.

We find no error in the judgment of the District Court, and the same is therefore affirmed.

SELIGMAN v. GRAY.

(Circuit Court of Appeals, First Circuit. October 7, 1915. Modification of Opinion, October 20, 1915.)

No. 1126.

BANKRUPTCY ⟹336—VOID MORTGAGE—PROOF OF CLAIM—AMENDMENT.

Where claimant advanced money to the bankrupt shortly before proceedings were commenced, taking a note and mortgages, which money was used in paying one or more creditors of the bankrupt, it being the intention of the bankrupt to give a preference, and the claimant having reasonable cause to know the fact, such claimant held an unsecured debt, and was subrogated to all equities which the creditors had before receiving payment from his funds, and, there having been no order expunging such claim, could amend his proof to stand as for an unsecured debt, since the mortgages could be declared invalid without affecting the validity of the debt itself.

[For other cases, see Bankruptcy, Cent. Dig. §§ 523, 524; Dec. Dig. ⟹336.]

Appeal from the District Court of the United States for the District of Massachusetts; Jas. M. Morton, Judge.

In the matter of the bankruptcy of one Soforenko, wherein William C. Gray was named as trustee. From an order (210 Fed. 562) affirming the disallowance by the referee in bankruptcy of a claim filed by Israel Seligman against said bankrupt's estate, said claimant appeals. Reversed and remanded.

Harvey H. Pratt, of Boston, Mass., for appellant.

Joseph B. Jacobs, of Boston, Mass. (Jacobs & Jacobs, of Boston, Mass., on the brief), for appellee.

Before PUTNAM, DODGE, and BINGHAM, Circuit Judges.

PUTNAM, Circuit Judge. This is a proceeding of the District Court involving a bankrupt, Soforenko, an alleged creditor, Seligman, holding a mortgage from the bankrupt, and Gray, the trustee in bankruptcy, who challenges the proof of debt and the mortgage connected therewith. Seligman proved the debt as a mortgage debt, according to form No. 32, 172 U. S. 700, 18 Sup. Ct. xxxii. The proof was challenged by the trustee, and after a second hearing by the referee an order was entered by the court, as follows:

"At Boston, in said district, on the 26th day of October, A. D. 1914, upon the question certified to the court by the referee in said matter on the 22d day of November, A. D. 1912, now, therefore, after hearing arguments of Harvey H. Pratt, Esq., counsel for the mortgagee, and Joseph B. Jacobs, Esq., counsel for the trustee, and after due consideration of the same—

"It is hereby ordered and decreed that the order of the referee disallowing the claim of Israel Seligman be, and it hereby is, affirmed.

"It is further ordered that the clerk send a copy of this order by mail to the referee."

There was, however, no order expunging the claim in accordance with form No. 39, 172 U. S. 706, 18 Sup. Ct. xxxvi. The case was taken to us as though such an order was unnecessary, and it has been submitted upon its merits.

The note and mortgages were taken immediately before proceedings in bankruptcy were commenced, and the amount representing the note,

which was in fact advanced by Seligman, was used in paying one or more creditors of the bankrupt, who, so far as this record is concerned, were entirely innocent of any attempt to obtain a preference, so that the only questions before us are between Seligman and Gray.

There never has been an order declaring the mortgage void, or any issue made upon which an order or judgment of that kind could be entered; but the case has been submitted to us as though the whole transaction was a fraudulent one, so that Seligman had no claim for either his mortgage or the debt secured by it. We find nothing in the record which establishes facts enough to maintain the proposition that the whole transaction was illegal or malum in se, or anything more than malum prohibitum in Seligman's becoming a party to a preference. The evidence sufficiently sustains the finding of both the court and the referee that it was the intention of the bankrupt to give the creditor, or creditors, who received the preference, the money which Seligman advanced, and also that Seligman had reasonable cause to know that it was the intention of the bankrupt to thereby accomplish a preference; so that clearly on the record here the debt was rejected as a secured debt. All we can determine, from what appears, is that Seligman holds an unsecured debt, and is subrogated to all the equities which the creditor, or creditors, had before receiving payment, and should be allowed to hold his debt as one unsecured.

As there has been no order expunging the claim, the simplest method is to allow Seligman to amend his proof as one of an unsecured debt. In substance, the case stands in the particular to which we have referred, with Van Iderstine, Trustee in Bankruptcy of Fellerman, v. National Discount Company, 227 U. S. 575, 33 Sup. Ct. 343, 57 L. Ed. 652, where a bill was brought to annul a similar transaction. The court held the bill should be dismissed, under the circumstances, permitting the loan to be held to be valid. The case is somewhat more fully reported in 174 Fed. 518, 98 C. C. A. 300. Like circumstances are considered in Remington on Bankruptcy (Ed. 1910) vol. 3, § 1301½, and in the notes thereto, leading to the result that the mortgage may be declared invalid while the debts remain provable. Such a result is plainly equitable in the case at bar, and the judgment will be as follows:

The decree of the District Court is reversed, and the case is remanded to that court, with leave to allow Seligman to amend his claim and secure its allowance as an unsecured debt, and the appellee recovers his cost of appeal.

Modification of Opinion.

PER CURIAM. It is ordered that the judgment heretofore entered in this case, at the present term, be stricken out, and that a modified judgment in lieu thereof be entered as follows:

The decree of the District Court is modified as follows; that is to say: The decree is affirmed, but the case is remanded to the District Court, with authority to said Seligman to amend his proof of debt, so that the same will stand for an unsecured debt, and to secure the allowance thereof on payment of the costs in the District Court and in the Circuit Court of Appeals, and, as thus amended and modified, the judgment is affirmed, and the appellee recovers his costs of appeal.

VENEER MACHINERY CO. v. GRAND RAPIDS CHAIR CO.

(Circuit Court of Appeals, Sixth Circuit. November 2, 1915.)

No. 2567.

1. PATENTS ⟹328—VALIDITY AND INFRINGEMENT—MACHINE FOR EDGE-UNITING VENEERS.
The Boenning patent, No. 709,864, for a machine for edge-uniting veneers, *held* valid, and claims 4, 5, 10, 12, and 15 infringed.

2. PATENTS ⟹165—CONSTRUCTION—CLAIMS TO BE CONSTRUED INDEPENDENTLY.
Each claim of a patent is supposed to embody a complete invention, and is in effect an independent patent for the device it covers, and a limitation contained in one claim cannot be read into another.
[Ed. Note.—For other cases, see Patents, Cent. Dig. § 241; Dec. Dig. ⟹165.]

3. PATENTS ⟹236—INFRINGEMENT—SUBSTITUTION OF EQUIVALENT PARTS.
A change in the form of some of the mechanism of a patented machine does not avoid infringement, where the principle of operation is substantially the same, and the same result is produced.
[Ed. Note.—For other cases, see Patents, Cent. Dig. §§ 372, 373; Dec. Dig. ⟹236.]

4. PATENTS ⟹245—SCOPE OF INVENTION—RIGHT TO EQUIVALENTS.
Although a patent for a combination in a machine of elements which were old in other and distinct arts, more or less remote, cannot be regarded as one for a primary invention, yet, where the patentee made a material advance in the particular art, the claims are entitled to a range of equivalents commensurate with his invention.
[Ed. Note.—For other cases, see Patents, Cent. Dig. § 386; Dec. Dig. ⟹245.
Patentability of combinations of old elements as dependent on results attained, see note to National Tube Co. v. Aiken, 91 C. C. A. 123.]

5. PATENTS ⟹168—CONSTRUCTION—ESTOPPEL BY CANCELLATION OF CLAIMS.
The voluntary cancellation of a claim in an application for a patent does not create an estoppel, affecting the construction or scope of other claims as allowed.
[Ed. Note.—For other cases, see Patents, Cent. Dig. §§ 243½, 244; Dec. Dig. ⟹168.]

Appeal from the District Court of the United States for the Southern Division of the Western District of Michigan; C. W. Sessions, Judge.

Suit in equity by the Veneer Machinery Company against the Grand Rapids Chair Company. Decree for defendant, and complainant appeals. Reversed.

Chappell & Earl and Fred L. Chappell, all of Kalamazoo, Mich., for appellant.

Samuel W. Banning, of Chicago, Ill. (Thomas A. Banning, of Chicago, Ill., of counsel), for appellee.

Argued before WARRINGTON and KNAPPEN, Circuit Judges, and McCALL, District Judge.

WARRINGTON, Circuit Judge. This is an appeal from a decree dismissing the petition of the Veneer Machinery Company, which we

shall call plaintiff. The petition is of the ordinary form used in patent infringement cases; and the answer of the Grand Rapids Chair Company (herein called defendant) is of the usual form, denying validity and infringement. The petition is in terms based upon two patents, though the issue tried and the evidence offered concern only one of them. This patent was applied for by the inventor, W. M. Boenning, August 1, 1901, and was issued to him September 30, 1902, and numbered 709,864. Admittedly title to the patent is in the plaintiff, having been assigned to it by Boenning in March, 1907. The alleged infringing device is claimed to have been constructed according to a patent issued to John Black, December 5, 1911, numbered 1,010,846. It is stipulated that after plaintiff acquired title to the Boenning patent, and before commencement of the suit, defendant made use of a machine which is identified in the deposition of plaintiff's expert; but, while the expert speaks of the machine as one manufactured under the Black patent, he states that a number of changes had been made in the machine "as built." References to the patent were, however, regarded by him as useful in connection with certain drawings made and produced by him.

Both of these patents, as also the machines made and used under them, relate to and involve apparatus for edge-uniting veneers. Both patents describe and both types of machines embrace mechanical means for forcing trued edges of veneer strips hard together, and for preserving this relation by simultaneously applying adhesive tape to the upper surfaces of the strips, so as to cover and secure the union of their abutting edges.

[1] The question is whether plaintiff's patent is infringed by the defendant's machine. We state the question in this way for the reason that, in spite of defendant's answer (if we lay aside claim 14 of the patent), both the evidence and the argument result alike in showing and admitting patentable invention in the Boenning machine, though the breadth of the invention and the consequent range of equivalents are in controversy and will be considered later. Both patents, as well as the machines in issue, involve many combined devices to attain a common result. Sixteen drawings are employed in Boenning's and six in Black's letters patent to illustrate the various parts of the machine which each describes in his specification; additional drawings and also models are produced to explain and display the machines that are in actual use; and yet the ultimate issues are reduced by the evidence to a comparatively small number of controverted parts. It is therefore not necessary to a right understanding of the case either to reproduce the drawings or to call attention to the uncontested details set out in the record.

1. *Patent in Suit.* The controverted portions of the machine covered by this patent may be said to comprise a table, about 4 feet in length, with two endless-chain conveyers commencing near its front end and centrally located, one immediately above and in line with the other, which are operated lengthwise of the table and thence through a drying box for an entire distance of something less than 30 feet. These chains engage and pass over sprocket wheels, one set of which

is placed near the forward end of the table and the other set at the end of the drying box. The upper surface of the lower conveyer, in plane with the upper surface of the table, is so shaped and supported as to form a solid bed; the lower surface of the upper conveyer is yieldingly held in contact with the upper surface of the other; and the two form a combined conveyer and press for the contacting edges and adjacent surfaces of the strips of veneer passing through them. These relations of the conveyers are maintained by two lines of rollers, one disposed beneath the portion of the lower conveyer which moves in the plane of the table, and the other above the portion of the upper conveyer and so as to exert pressure upon it while its lower surface is in contact with the upper surface of the other conveyer. The axes of the lower line of these rollers are fixed; but the axes of the upper line have vertical movement in slots and are held down against the other conveyer by springs adjustable through mechanism operated by hand. Further, there are two sets of three rollers each, one set being on each side of the upper part of the lower conveyer and about midway of the length of the table. The upper surface of these rollers lies in the plane of the upper surface of the lower conveyer. The three rollers to the left of the conveyer have their axes at right angles to the plane of movement of the conveyer, while the three rollers on the opposite side are corrugated and have their axes inclined to this plane. Immediately over these two sets of rollers, two other like sets are similarly disposed; that is, having their axes parallel with those immediately below. The object of these rollers is to force the edges of the veneer blanks firmly together as they pass through the conveyers and the adhesive tape is applied. This degree of edge contact is brought about by the rigidity which is imparted to the veneers by the uniform pressure to which they are subjected when passing through the moving conveyers and rollers and by their consequent susceptibility to the influence of the lateral rollers; that is, by the tendency of the two sets located on the left side of the conveyers to hold each veneer strip passing between them in the plane of movement of the conveyers, while the tendency of the opposite sets is to crowd each veneer strip passing between them against the other veneer strip by reason of the oblique relation of such opposite rollers to the plane of movement of the conveyers.

The taping process is this: From a tape reel mounted above the forward portion of the upper conveyer the tape is carried directly downward and over a roller which contacts with another roller rotating in a glue reservoir. The tape thus having the glue distributed over its under surface is continued in the same course until it is engaged by the conveyers, with its upper surface contacting with the upper conveyer and its glue surface with the portions of the upper faces of the veneers adjacent to and also embracing their abutting edges during the passage of the veneers through the machine.

The lower conveyer and the lower sets of lateral rollers before described are power-driven and are operated at the same speed; but the upper conveyer, as also the upper lateral rollers, are operated as idlers through contact with the veneers passing between them and their

corresponding parts below. The veneers are fed into the machine by an operator located in front of the table. To assist the operator the patent provides for an adjustable guide, though practically a thin blade is used in its stead. In using the former the trued edges of two veneers are brought into contact, while the outer edge of one of them is placed against the guide, and they are held together in that position and pushed forward by the operator until their ends are gripped by the conveyers. When the blade is used, it is fastened to the surface and lengthwise of the table opposite to the center line of the conveyers; and the trued edges of the veneers are held on opposite sides of the blade and pushed forward by the operator until they are gripped by the conveyers. When the veneers are manipulated in either of these ways, the method of edge-veneering is performed by the machine.[1]

Of the 22 claims of the Boenning patent, 6 are in suit—4, 5, 10, 12, 14, and 15. Claim 4 reads thus:

"In a device for edge-uniting two blanks of veneer or similar material, means for carrying said blanks in one direction, mechanism tending to force one of said blanks at an angle to the line of travel of said means and a distributer for placing a strip of adhesive material above the joint between said blanks." [2]

---

[1] The patent mentions two ways of applying glue to the trued edges of the veneers, one being to apply it before the veneers enter the machine, and the other after they have passed through it. Since neither enters into the mechanism of the structures specified in the claims in suit, we cannot think it necessary to make further reference to them.

[2] The remaining claims in suit follow, except that the words with which each claim is commenced are not repeated: "In a device for edge-uniting two blanks of veneer or similar material."

Claim 5: "* * * A conveyer adapted to grip said blanks adjacent to their abutting edges and to carry the same through said device, means tending to force one of said blanks toward the other or at an angle to the line of travel of the conveyer, and mechanism acting in conjunction with said conveyer for placing a strip of adhesive material on said blanks over their abutting edges."

Claim 10: "* * * A table on which said blanks are placed, means for gripping said blanks simultaneously and imparting movement thereto, mechanism tending to force one of said blanks toward the other or out of the line of movement given by said means, a supply of adhesive material and a distributer acting in conjunction with said means for placing said adhesive material on said blanks above the joint between them, substantially as described."

Claim 12: "* * * A conveyer comprising an endless bed, and means for holding the blanks on said bed, a table on which said blanks are placed, said table being provided with an opening through which said bed moves, rollers arranged back of said table at one side of said bed with which said blanks in the movement given to them by said bed are adapted to contact, said rollers being arranged so as to force said blank toward other blanks, means operating in conjunction with said conveyer for placing a strip of adhesive material on the succeeding blanks over their abutting edges after said adhesive material has been placed on said first-mentioned blanks above their abutting edges, and means for moving said conveyer, substantially as described."

Claim 14: "* * * A conveyer for said blanks, upper and lower rollers standing at right angles to the line of travel of said conveyer between which one of said blanks is adapted to pass, means tending to yieldingly hold the upper rollers in contact with said blank, upper and lower rollers standing at acute angles to the line of travel of said conveyer between which the other of said blanks is adapted to pass, means yieldingly holding the upper of

2. *Alleged Infringing Device.* It is stated by the expert for defendant, and as we have seen by the expert for plaintiff, that the machine used by defendant differs in some respects from the machine described in the Black patent. We need not, therefore, attempt to show more of the details of that patent than are involved in some of the differences between it and defendant's machine. This may be done when considering features of correspondence between the machine and the Boenning patent. In the defendant's machine two endless conveyer chains are mounted with their upper surfaces in the plane of a table. They incline toward each other and are separated by a wedge-shaped strip, having one of its triangular surfaces in the plane, with the head of the wedge at the front and the thin edge disposed vertically at the rear, of the table. These features correspond with the Black patent, except that it provides for conveyer belts instead of conveyer chains. Sprocket wheels are maintained underneath and near each end of the table, over which the conveyer chains run. The bottom portions of the chains hang down and run under a strut, not over an idler pulley such as the Black patent calls for, and the upper portions of the chains are supported upon plates (instead of rollers as the Black and Boenning patents specify), which form beds for the portions of the chains moving in the plane of the table. Three rollers inclosed in boxes are mounted over each conveyer chain. The bottom of each box forms a shoe through which the rollers slightly project. These boxes with their shoes and rollers are controlled by adjustable spring pressure and so the shoes and rollers are made to press upon the veneers. An intermediate or third shoe is maintained over the wedge-shaped strip, lying between the conveyer chains, and is also controlled by adjustable spring tension and so exerts pressure upon the edges of the veneer strips. The three shoes project some inches in front of the compression roller boxes with their ends curved upward. The intermediate shoe extends rearwardly to a point where the taping process begins, while the other shoes, one on each side of the tape-adhering rollers, extend still farther toward the rear of the table.

A tape-adhering roller, adjustable through spring tension, is mounted over the wedge-shaped strip directly in rear of the intermediate shoe, and contacts with a roller vertically mounted in such strip. A tape reel, mounted above the mechanism thus far described, carries a prepared tape which requires moistening to make it adhesive. In its passage from the reel, the tape is carried over moistening rollers and delivered at the end of a tape guide in front of the adhering roller. The tape is then engaged by this roller and the veneers below, and so is attached to the strips.

said last-mentioned rollers in contact with said last-mentioned blank and mechanism for driving said conveyer and the lower of said rollers at the same speed."

Claim 15: "* * * A conveyer moving longitudinally of the abutting edges of said blanks, means tending to force said blanks together and a distributer acting in conjunction with said conveyer for placing a strip of adhesive material above the abutting edges of said blanks."

The power-driven portions of the mechanism described are the conveyer chains. The compression rollers, mounted in boxes as stated and the tape-adhering rollers are operated as idlers through contact with the veneers passing between such rollers and the conveyer chains. The machine is fed from the front by an operator, who places the trued edges of veneers upon either side of a channeled guide which is fastened to the upper surface of the forward portion of the wedge-shaped strip, and moves them forward until they are engaged by the conveyer chains and the front compression rollers; and the edge-uniting process is then effected by the machine.

3. *Infringement.* Now, if we have fairly described the machine called for and used under the patent in suit, and also the machine used by the defendant, we think any careful consideration of the descriptions will reveal mechanical equivalence in the edge-uniting parts of the two machines. These parts may be more conveniently compared by first considering the taping features of the machines. These features are obviously similar, except only as to the adhesive qualities of the materials used upon the tapes respectively and the consequent unimportant differences in devices used for applying the tape to the veneers. The Boenning patent calls for the application of glue to the tape, which (when used) requires at least partial drying in the machine; while the defendant uses a tape bearing an adhesive material which must be moistened before it is applied; and it is worthy of notice that the Black patent provides for a tape with an adhesive material which has to be moistened before applying it, and then heated in pressing it upon the veneers. Defendant thus avoids the use of a heating device, such as the drying box of the Boenning patent or the heated tape-adhering roller called for in the Black patent; but the tape used by defendant is an old and well-known commercial article, and so cannot be and is not claimed to be a differentiating element of any consequence. It follows that the drying box and consequent length of conveyers called for by the Boenning patent cannot be determinative of the present question of infringement; indeed, while the claims in suit call for conveyers, they do not specify their lengths, nor do they even mention the drying box or anything like it. In saying this, we appreciate the fact that the Boenning specification describes a drying box and the method of heating it, calling it "housing," and also that portions of the drying box and of the conveyers are shown on one of the drawings; but it is manifest that the drying box and its additional length of conveyers are not essential parts of the edge-uniting mechanism specified in the claims in suit, since an admitted equivalent is secured through the use of a prepared and effective tape (not requiring the application of heat) which is readily obtainable in the market.[3]

[3] Prof. Cooley, plaintiff's expert, after stating the length of the front part of the machine, the table, in which the veneers are united, testified as follows upon the subject, without contradiction: "The rest of it is dry kiln or housing. The adhesive material used was ordinary glue transferred from a melting pot to a strip of loosely woven muslin, and about 1½ minutes was required from the time the veneer strips entered the machine to their delivery at the rear end. Obviously if a different adhesive material were used, the length of the drying apparatus could be reduced, and indeed with certain

[2] The plaintiff's rights in this case are to be ultimately tested by the claims in suit. The rule is that each claim embodies a complete invention and in effect is an independent patent for the device it covers. Leeds & Catlin v. Victor Talking Mach. Co., 213 U. S. 301, 319, 29 Sup. Ct. 503, 53 L. Ed. 816; Bresnahan v. Tripp Co., 102 Fed. 899, 900, 43 C. C. A. 48 (C. C. A. 1st Cir.); XXth Century Heating & V. Co. v. Taplin Rice-Clerkin Co., 181 Fed. 96, 100, 104 C. C. A. 156 (C. C. A. 6th Cir.), and citations; Pope Mfg. Co. v. Gormully & Jeffrey Mfg. Co. (C. C.) 34 Fed. 893, 894. It is evident, moreover, that the claims in suit are broader than they would have been if the element of "housing" had been included in them, as it was in some of the claims not in suit, especially if "means for heating said housing" had also been included as claim 13 specifies; and to construe into any of the contested claims a limitation they do not contain would be unwarrantably to change the contract entered into through the issue and acceptance of the letters-patent. National Tube Co. v. Mark, 216 Fed. 507, 521, 133 C. C. A. 13 (C. C. A. 6th Cir.), and C. C. A. decisions there cited.

The question of infringement may thus be confined, and we think rightfully, to the parts of the two machines in issue which receive the veneer strips, force their trued edges firmly together, and preserve this edge relation by the application of adhesive tape. The principal contention made against the charge of infringement is that defendant's machine has no "means for carrying said blanks (the veneer strips) in one direction" within the meaning of claim 4 of the patent in suit, nor any instrumentality amounting to a mechanical equivalent for so carrying the blanks; and we understand this to be the basis of the decision below. The theory is that an element of the patent in suit is thus omitted, without substitution. It must be conceded that a claim for a combination is not infringed if any one of the elements is omitted without substitution of an equivalent (Cimiotti Unhairing Co. v. Am. Fur. Ref. Co., 198 U. S. 399, 410, 25 Sup. Ct. 697, 49 L. Ed. 1100; Union Paper Bag Co. v. Advance Bag Co., 194 Fed. 126, 138, 114 C. C. A. 204 [C. C. A. 6th Cir.], and citations); but the contention that an element has been omitted here proceeds upon the theory that since defendant's conveyer chains travel in converging lines, while the chains (constituting a combined conveyer) of the patent in suit travel in a direct line, the veneer strips entering the respective machines are accordingly carried along different lines of movement; that is, the former are carried in converging directions, while the latter are carried "in one direction." This seems to be losing sight of the facts and so giving a strained and apparently undue significance to the words "in one direction." Admittedly, in both machines the trued edges of the veneers, throughout their lengths, are and of necessity must be

adhesive materials it could be done away with entirely, so that the machine would then be confined to the part which receives the veneer strips, forces their edges together, and applies the strip of adhesive tape. It is this part of the machine of the Boenning patent with which the claims in suit have to do, and it is therefore unnecessary to enter into any detailed description of that part of the machine embraced within the so-called housing."

carried in contact and *in one direction* during the process at least of effectively applying the tape; and the weight of the evidence is that the lines along which the veneer strips travel from their start to the portions of the conveyers where their trued edges entire are brought hard together and so secured by the tape, are substantially the same in both machines. We have seen that the strips of veneer fed into the patented device are moved in parallel lines either with their trued edges together or separated by a thin blade until their forward ends are gripped by the combined conveyer, and that the veneers fed into the defendant's machine are moved in parallel lines along each side of a channeled guide until they are engaged by the conveyer chains and the front compression rollers. It is true that during the feeding processes mentioned, the separation of the veneer strips is somewhat greater on the table of defendant's machine than on that of the other, being from one-sixteenth to one-eighth of an inch on the former, and one-sixty-fourth of an inch on the latter; but the strips fed into the respective machines evidently travel "in one direction" until their ends are gripped, and since the edges are held between the two members of the conveyer of the patented machine and between the wedge-shaped strip and intermediate shoe of the other, it cannot be that such slight difference in intervening space as this affords opportunity for material change in direction of the veneers thereafter in either machine.

[3] We are mindful of the expert testimony concerning the effect of the lateral rollers, especially of those whose axes are inclined to the plane of movement of the conveyers, of the patent in suit, and also of the converging conveyers and compression rollers of defendant's machine, upon the movement of veneer strips passing between them; but in view alone of the limited space, just pointed out, in which lateral movement is possible in respect of any of the passing veneer strips, it is most difficult to see why the edge-uniting mechanism of defendant's machine is not in its principle of operation substantially the same as, and so in the sense of the patent law an equivalent for, the corresponding mechanism of the patent in suit. Defendant's use of conveyer chains disposed in converging lines with an intervening wedge and all coacting with compression shoes and rollers, and so in effect making a unitary edge-uniting mechanism, was to change the form rather than the substance of the edge-uniting characteristics of the Boenning invention, and confessedly not to produce a new result. If this does not amount to infringement, it is hard to conceive of what would. Machine Co. v. Murphy, 97 U. S. 120, 125, 24 L. Ed. 935; Wagner Typewriter Co. v. Wyckoff, Seamans & Benedict, 151 Fed. 585, 591, 592, 81 C. C. A. 129 (C. C. A. 2d Cir.); Delaware Steel & Tube Co. v. Shelby Tube Co., 160 Fed. 928, 930, 88 C. C. A. 110 (C. C. A. 3d Cir.); Schiebel Toy & Novelty Co. v. Clark, 217 Fed. 760, 771, 133 C. C. A. 490, and citations (C. C. A. 6th Cir.); Hoyt v. Horne, 145 U. S. 302, 309, 12 Sup. Ct. 922, 36 L. Ed. 713; Wayne Mfg. Co. v. Bendow-Brammer Mfg. Co., 168 Fed. 271, 278, 93 C. C. A. 573 (C. C. A. 8th Cir.). And see Paper Bag Patent Case, 210 U. S. 419 to 422, 28 Sup. Ct. 748, 52 L. Ed. 1122. It is vain to say,

as one of defendant's experts in substance states, that there is a slight distortion in the movement of blanks traveling in defendant's machine before a straight line is reached and then admittedly followed; for if this takes place in that machine it confessedly also occurs to some extent in the other, the difference being only in negligible degree, and this is not enough to escape infringement. Black, the inventor of the opposing patent, could not definitely state what took place in defendant's machine in the respect mentioned, though he always instructed the operator to "keep the veneer about an eighth of an inch apart when it entered the machine," but that when the material was placed against the central guide upon introducing it into the machine "it would be close because there is nothing to separate it in our machine." Upon all these considerations we are persuaded that Prof. Cooley was right, when he said:

"* * * That in any practical sense, having in mind the work which the machine must perform, the two constructions are substantially alike, and that in the actual forcing of the blanks together and in joining them with a tape, not only are the mechanisms performing the operations substantially the same, but these mechanisms function in the same or substantially the same way. * * *"

[4] We do not overlook the insistence that the prior art requires the Boenning claims to be limited to the exact devices they call for. Counsel adduce a number of patents showing mechanisms designed, for instance, to unite edges of boards through application of glue, as also devices intended for other purposes and similar in a sense to other parts of the Boenning mechanism; yet we do not find reference to any previous invention that was adapted to the successful union of the edges of veneers. This is recognized by both sides as a useful art; and, through scarcity of the better classes of timber, the needs of the art prior to the invention in suit resulted in a demand for mechanical means effectively to unite the edges of narrow as well as wide strips of veneer. Boenning appears through his invention to have been the first to accomplish this end, although he did so through a combination of elements that were old in other and distinct arts more or less remote; and while such a patent cannot be regarded as a primary invention, nevertheless, the patentee made a material advance in the veneer edge-uniting art and his claims are therefore entitled to a range of equivalents commensurate with his invention. Wagner Typewriter Co. v. Wyckoff, Seamans & Benedict, supra, 151 Fed. 591, 81 C. C. A. 129; Paper Bag Patent Case, supra, 210 U. S. 415, 28 Sup. Ct. 748, 52 L. Ed. 1122; Schiebel Toy & Novelty Co. v. Clark, supra, 217 Fed. 768, 133 C. C. A. 490.

[5] It is said that the claims in suit are to be limited by reason of what happened to claim 19 of the original application in the Patent Office. Of this it is sufficient to say that as we understand the contents of the file wrapper the claim was voluntarily canceled by the inventor and his act is in consequence lacking in any element of estoppel. Vrooman v. Penhollow, 179 Fed. 296, 305, 306, 102 C. C. A. 484 (C. C. A. 6th Cir.). It is also said that the plaintiff did not purchase the Boenning patent for purposes of use, but of suppressing competition. This is

not sustained by the proofs, and, moreover, it is settled that an inventor receives through his patent, and of course may assign, the right to exclude others from its use for the time prescribed by the statute. Paper Bag Patent Case, 210 U. S. 425, 28 Sup. Ct. 748, 52 L. Ed. 1122.

It follows that, with one exception presently to be mentioned, the claims in suit must be held to be infringed; indeed, the defense mainly relied on in trial and argument amounts to an admission of infringement unless the claimed omission of an element without substitution is sustainable. What we have already said abundantly shows that we do not think the defense was made out. The defendant's expert forcefully points out one or two elements which seem to have been omitted from claim 14; but, in view of the rulings upon the other claims in suit, the effect of such omission need not be determined.

The decree of dismissal must be reversed, and the cause remanded, with costs, and with direction to enter a decree finding infringement of all the claims in suit, except claim 14, and to allow the usual injunction and accounting.

THOMSON ELECTRIC WELDING CO. et al. v. BARNEY & BERRY, Inc.

(Circuit Court of Appeals, First Circuit. October 5, 1915.)

No. 1115.

PATENTS ⟹328—VALIDITY—ELECTRIC WELDING.

The Harmatta patent, No. 1,046,066, for process of electric welding, was not anticipated, discloses invention, and is not invalid because of amendments of the application while pending in the Patent Office.

Appeal from the District Court of the United States for the District of Massachusetts; Frederic Dodge, Judge.

Suit in equity by the Thomson Electric Welding Company and another against Barney & Berry, Incorporated, for infringement of letters patent No. 1,046,066, for a method of electric welding, issued to J. Harmatta December 3, 1912. Decree for defendant, and complainants appeal. Reversed.

The following is the opinion of the District Court:

The Thomson Electric Welding Company owns United States patent No. 1,040,066, for improvements in electric welding, issued to Johann Harmatta December 3, 1912, upon his application filed December 3, 1903. It acquired Harmatta's rights in February, 1912, while his application was still pending. The other plaintiff, Universal Electric Welding Company, is, and has been since 1909, exclusive licensee under all patents then or thereafter owned or controlled by the Thomson Company, including the patent whereon the present suit is brought.

There are 21 claims in all; the first 16 being for a method or process described, and the last 5 for the product thereof. Infringement of all the claims is charged, but the plaintiffs ask the court to consider only 8 of the process claims (Nos. 3 to 6, 8, 9, 11, and 12) and only 4 of the product claims (Nos. 17, 18, 19, and 21). The defenses are lack of invention, anticipation, invalidity because of changes made in the application before issue, and noninfringement.

Introductory statements in Harmatta's specification are that his invention relates to the manufacture of metal articles of all kinds, and consists in a

---

⟹For other cases see same topic & KEY-NUMBER in all Key-Numbered Digests & Indexes

novel method of fastening their component parts together by the process of electric welding; also in the new article produced thereby. The invention is further said to afford a cheap and practical substitute for riveting.

Consideration of former methods of uniting metals by electric welding is therefore required, in order to determine the precise scope of Harmatta's invention. For the purposes of such inquiry, his own definition of "electric welding" may be adopted. He says in his specification:

"By the term 'electric welding,' as used herein, I mean that well-known process in which the work is brought to the welding temperature by internal heat generated by the resistance of the work itself to the passage of an electric current at the place of contact between the parts to be joined by the welding pressure."

And this is immediately followed by his express disclaimer of "those processes of fastening pieces of metal together in which the parts are heated and practically melted down by an electric arc generated on the back of the piece by 'drawing' an arc by means of the electrode, as well as other processes in which the welding heat is generated externally and electrically in a resistance material and is imparted to the work by heat conduction from said resistance material in contact with the work."

The electric welding art may be said to have begun with the inventions of Elihu Thomson, disclosed in two United States patents issued to him on August 10, 1886—Nos. 347,140 and 347,141. The first of these describes the process of "butt-welding," wherein the ends of wires or bars, held by suitable electrodes, are butted together under pressure, raised to welding heat by an electric current of small voltage and large volume passed through them from one electrode to the other, and caused to unite into one mass over their entire area of contact, while thus plastic, by the pressure applied. A slight burr or flange of metal, extruded while plastic at the junction point, is left in the welded article. The second of the above patents covered the apparatus for carrying out the process described in the first.

Five years later (January 20, 1891) another United States patent, No. 444,928, was issued to Thomson, covering a process of joining two strips, sheets, plates or bars of metal by continuous electrically welded seams. Roller electrodes were used, between which the two strips or sheets to be joined were fed during the passage of current from one to the other. Suitable pressure devices enabled the opposed electrodes to hold the two strips or sheets in close contact between them at the point of the current's passage. The use of roller electrodes permitted an uninterrupted current to be passed through all points within the line of the desired seam successively and without relaxation of the pressure. Electrodes not provided with means to permit this could not have produced a continuous seam, but only, at most, a series of more or less frequent welds along its line, each requiring separate application and interruption of pressure and current.

A still later United States patent to Thomson, No. 496,019, issued April 25, 1893, covered a process of soldering (instead of welding) two overlapped sheets of metal together by the passage of current through them, so as to produce the necessary heat where the desired junction was to be made, between two electrodes arranged to hold them there in contact while the current passed. Less heat, and therefore less current, is required for soldering than for welding. The process described in this patent might have been used to produce a welded, instead of a soldered, union between the sheets merely by an increase in the amount of current passed between the electrodes.

All the above patents have belonged to the Thomson Company since their issue. The two "butt-welding" patents expired August 10, 1903, shortly before Harmatta's application was filed. There was reference to them and to others of the above patents in the patent in suit, made in connection with the patentee's statement of the scope of his invention.

The patent states that in general terms the invention may be said to consist "in fastening the pieces together by an electric weld at one or more distinct or well-defined spots, each of small area or extent in their juxtaposed or opposite plane faces, by the application of pressure and heating current localized in such spots, and in the special method of localizing the heating and pressure in the spot or spots as hereinafter described," etc.

The substance of the description then following is contained in the following passage quoted from the plaintiffs' brief:

"Harmatta's invention may be thus described:—

"Two comparatively thin sheets of metal can be joined together by one or more isolated welds in their meeting surfaces, made by applying electrodes of limited facial area to the backs of the sheets, pressing the electrodes and sheets together, and passing a welding current from one electrode to the other, whereby a weld is made between the sheets at the spot, the area of which is determined by the area of the electrodes in contact with the metal sheets."

The patentee's references to former patents are:

"It has been before proposed to electrically weld two rods of metal together by a butt-welding process, the area of union effected being substantially coextensive with the cross-section of the pieces at their meeting ends; 'that is to say, the weld has been made over substantially the whole area of the opposed portions of said pieces. It has also been proposed to make a lap joint between the ends of two strips of metal by electrically uniting them together over substantially the whole area of the lapping surfaces."

"I am also aware of patent to H. F. A. Kleinschmidt, No. 616,436, dated December 20, 1898, and do not wish to be understood as claiming anything disclosed in said patent."

The patent here referred to does not appear to have belonged, like the others, to the Thomson Company but to the Lorain Steel Company, whereof Kleinschmidt was an employé. In using his patented method commercially, however, he testified that he used an electric welding machine made by the Thomson Company. His patent covers a process of attaching splice bars to rails. Two splice bars, each having on one side three projections or "bosses," one at each end and one in the middle, are placed, one bar against each side of the abutted rails, so that their projections are opposite each other and their middle projections opposite the junction of the rails. Their contact with the rails is through their projections only. Electrodes of much greater facial area than the projections are applied against the backs of the splice bars opposite each pair of projections. Pressure applied to the electrodes in the direction necessary to force them toward each other holds the webs of the rails and the splice bar projections in contact with the electrodes and each other; the required current transmitted between the electrodes heat the projections, and so much of the webs of the rails as lies between them at the contact points, to welding heat, and the pressure applied as above causes union at those points.

To the remaining patents in evidence as part of the prior art briefer reference will be sufficient. Of United States patent 363,320, to Benardos and another, May 17, 1889, and the German patent to Benardos, 50,509, February 19, 1890, it is enough to say that neither relates to electric welding in the sense of the patent in suit, and that both processes described are of the kinds expressly disclaimed by Harmatta, as above.

United States patent No. 670,808, to Perry, March 26, 1901, covers a method and machine for electrically welding the rods or wires of metallic fencing at their crossing points, by a simultaneous application of mechanical pressure and electrical current at those points. The similarity of what is described to the process of the patent in suit is at most general, and not more significant, for the purposes of the questions presented, than in the case of the Thomson and Kleinschmidt patents already mentioned.

United States patent to Hunter No. 690,958, January 14, 1902, is for a method of electrical welding together similar sheets of metal at their ends, so as to produce water-tight joints between them, and form from them continuous lengths for roofing purposes. Pressure and current are simultaneously applied to melt and unite the metal of the sheets at a series of points determined by projections previously formed in one and arranged to contact with the other sheet along the desired line of junction. The metal, melted where each projection contacts with the other sheet, spreads to unite with that at the next projection and thus to form a full transverse weld. No such spreading of molten metal is contemplated by the process of the patent. Except that metallic sheets are to be joined instead of rails, I find no resemblance

in this process to that of the patent more significant than in the case of the Kleinschmidt patent.

The plaintiffs say that Harmatta's method of joining comparatively thin sheets of metal by isolated welds, made in the manner described, "was a radically new idea."

But so far as he did no more than employ simultaneously the passage of electric current to bring the work to welding temperature at the place of contact by its own resistance, and application of welding pressure at the same place, he introduced no new idea at all. All this, if not necessarily involved in the terms of his own definition of "electric welding," is certainly to be found in each one of the inventions disclosed in the various patents before mentioned which make use of that process. His new idea, if any, must be something beyond this.

The plaintiffs contend that localizing the current by pressure in a particular limited area of the contacting surfaces of the work, determined by the area of the applied electrode, and thereby bringing that limited area to a welding temperature without material heating of the adjacent parts, was new with Harmatta. It is said that, by localizing the pressure at the selected limited area of the work he thereby reduced the resistance, concentrated the current, and increased its welding power within that area, securing at the same time, by means of the pressure upon the softened metal within the same area, the desired molecular union there between the two sheets. But all this is necessarily accomplished at every point successively along the line of the continuous electrically welded seam made by the process of Thomson's patent No. 444,928. It must also be accomplished, so far as I can see, in every case of an electric weld covering less than the whole area of the surfaces joined, made under pressure exerted between the two electrodes. The passage of current and the heating of the metal must occur at those places within which the resistance is most diminished by the pressure. Claims drawn upon the theory that such localization of pressure, current and heating were new with Harmatta appear to have been repeatedly rejected and canceled in the Patent Office before his patent issued.

The prior art thus leaves no room, so far as I can see, for crediting Harmatta with any idea beyond that of making his electric welds small in area, rather than large, in comparison with the areas of the opposed surfaces to be joined, and isolating them so as to leave each surrounded by a comparatively large area of unwelded surface. Although his patent states that a weld formed by his process is distinguished from prior welds, "among other things," in the above respects, these are the only respects which he specifically mentions and they are in my opinion the only respects in which any distinction can be said to exist.

It is difficult to regard the above as an inventive idea. Referring again to the Thomson patent, No. 444,928, the process therein described, while it is said to be "especially applicable to the welding of plates together at their edges, instead of riveting," is just as applicable to the welding of plates or sheets at other places within their area as at their edges. The roller electrodes employed, when brought together on each side of the work, and until something more is done, will pass the electric current and make the weld at the spot or point of pressure and nowhere else. (See claim 1 of the patent referred to.) If, having there made the weld, they should be again separated, instead of having the work fed between them while their pressure upon it continued, they would leave an isolated spot weld joining the plates and be in readiness to make another weld isolated from the first by any desired area of unwelded surface.

The plaintiffs say that, although machines were built to carry out the roller process of the last-mentioned patent, they were not practically successful, and that the process has proved a failure so far as commercial success is concerned. Their evidence tends to support this contention, and to show that there are practical difficulties attending the use of the process. But so far as the question raised is important, I think the plaintiffs' evidence tending to show want of success is fully met by that of the defendant, according to which the process has been successfully carried out by machines built and commercially installed by at least two different concerns. Samples of the

work they have produced by using it are among the exhibits in the case, and there is nothing to show that such work is unsatisfactory in character.

The presumption of validity arising from the issue of the patent seems to me entitled in the present case to less than the usual weight, in view of the history of the Patent Office proceedings upon Harmatta's application as disclosed by the file wrapper and contents in evidence. As has appeared, the application was pending for ten years before the patent issued. As originally filed, the application described a process of roller welding substantially like that of Thomson, with the statement toward the close of the specification that, instead of introducing the piece to be welded gradually between the electrodes, the welding apparatus might be arranged to slide relatively to them, and that, if required to weld sheets only at particular places, apparatus employing electrodes having the form of pins might be used, instead of the roller electrodes, to produce "a small, round, very sharply defined place of welding," answering the purposes of a rivet. There were two claims covering roller welding and two others not thus limited. The idea of roller welding thus appears to have been, with Harmatta, the foundation and origin of his further idea of spot welding, and his further idea to have consisted in nothing more than stopping with the first point welded, instead of continuing it into a welded line.

Harmatta's roller welding claims having been rejected in view of Thomson's patent and canceled on May 14, 1904, with so much of his original specification and drawings as related to them, his application became and thereafter continued to be an application covering "spot welding" only. The original claims covering it, however, soon disappeared, and there were further successive rejections, cancellations, amendments, and substitutions of new claims in 1904, 1905, 1906, 1907, and 1910. Meanwhile patent No. 928,701 issued on July 20, 1909, to Rietzel, on an application owned by the Thomson Company. March 31, 1910, Harmatta copied some of the Rietzel claims, at the suggestion of the Patent Office, in order that an interference might be declared. After this had been done, on April 26, 1910, Harmatta added still other Rietzel claims to his application, and it was acquired also by the Thomson Company, pending the interference, in February, 1912. The interference was decided in his favor in October, 1912; but, before issue of the patent, still another cancellation and substitution of a new specification with new claims was found necessary, wherein the invention was for the first time stated to consist in having the welds small and surrounded by comparatively large areas of unwelded surface.

All this may be regarded as significant on the question of patentable novelty (Richmond v. Atwood, 48 Fed. 910, 913, 1 C. C. A. 144) and it seems sufficient to indicate, at least, that only with unusual difficulty was Harmatta able to suggest, or the Patent Office to find, in his spot-welding process, however described, anything capable of being regarded as patentably new in view of the prior art.

Under its butt-welding patents and roller-welding patent the Thomson Company appears to have had a complete monopoly of electric welding. The latter patent expired January 20, 1908. While the monopoly continued, electric welding machines could be had only under lease from the Thomson Company, restricting their use to specified articles. In 1908 the Toledo Electric Welder Company, which made the machine which the defendant uses, and is defending this suit, began to make and introduce machines for spot welding. Other concerns followed in 1908, 1910, and 1911, all acting without knowledge of previous applications by Harmatta or others for patents covering the spot-welding process. Under these circumstances it can hardly be said that, upon the question of patentable novelty in anything invented by him, Harmatta is supported by any advantages which the development of spot welding since 1908 has shown to reside in the process, or by any commercial success it has attained. I do not think the facts shown entitle him to say that by his alleged invention as he was finally obliged to define and limit it, he was the first to supply a wide spread demand not previously met.

The defendant's use of the Toledo machine, which is here complained of as an infringement, is in the manufacture of skates. The greater part of the work done by the machine is in uniting two strips of metal, each forming half of a skate runner, by successively made, contiguous, overlapping, spot-electric welds, small in size, which together make a practically contin-

uous weld from one end of the runner to the other. The process is carried on with such rapidity that one weld has hardly begun to cool before the weld adjoining it is made. The completed row of welds is thus, for all practical purposes, like a continuous seam weld produced by the use of roller electrodes. The welds of which it is composed are neither isolated nor separated by comparatively large areas of unwelded surface. I do not see how, in any case, the patent could be so construed as to make this method of welding an infringement. If not, to sustain the patent involves leaving the question of infringement to depend merely upon the amount of unwelded area left between the welds, and this result seems to me to afford a further reason against holding it valid.

My conclusion must be that the process described in the patent does not involve invention, in view of the prior art. There may be a decree dismissing the bill with costs.

Frederick P. Fish, of Boston, Mass. (J. Lewis Stackpole, of Boston, Mass., on the brief), for appellants.

Lawrence K. Sager and Clifton V. Edwards, both of New York City, for appellee.

Before PUTNAM and BINGHAM, Circuit Judges, and ALDRICH, District Judge.

PUTNAM, Circuit Judge. This case alleges infringement of a patent for an invention, and the decree in the District Court was for the respondent. Thereupon the complainants appealed to us. The opinion of the learned judge of the District Court refers to the fact that there were 21 claims in all; the first 16 being for a method or process, and the last 5 for the product. The opinion also states that the complainant asked the court to consider only 8 of the process claims, Nos. 3 to 6, 8, 9, 11, and 12, and only 4 of the product claims, Nos. 17, 18, 19, and 21.

The alleged defenses are lack of invention, anticipation, invalidity because of the changes made in the application before issue of the patent, and noninfringement. We need not distinguish the defenses by taking them each up, separately and specifically, because the whole case turns mainly about a single major proposition.

The opinion of the learned judge of the District Court says that the introductory statements in the patentees' specification are that the inventions relate to the manufacture of metal articles of all kinds, and consist of a novel method of fastening their component parts together by process of electric welding, and also of the new articles produced thereby. He also observes that the inventions are further said to afford a cheap and practical substitute for riveting.

The brief for the complainants, now the appellants, states substantially the complainants' case, as follows:

"Harmatta's invention of the patent in suit was a new departure in the art of electric welding, which art had been created by the inventions of Prof. Elihu Thomson, in 1886, shown and described in the Thomson patents, Nos. 347,140 and 347,141.

"These Thomson patents show and describe for the first time the process of electric welding, but disclose only how it may be applied to joining the butt ends of two metallic rods together by passing an electric current of low voltage and high amperage from one rod to the other. The invention was a valuable one and went into commercial use, where the process became known as 'butt-welding.' In this Thomson butt-welding process two metal rods are held by large copper electrode clamps, which are respectively

the terminals of the electric circuit. When the current is turned on, it flows in its circuit through the electrode clamps and through the ends of the rods which protrude beyond the electrodes. As the rods are of smaller cross-section than the electrodes, they restrict the flow of the current to the smaller path which they afford, and they thereby concentrate the current and increase its heating effect.

"The resistance of the rods, together with the resistance at the joint between their abutting ends, increases the heating effect of the current so that the ends of the rods are highly heated by the current and become plastic. The resistance and resulting heat at the joint are comparatively great, because of the break in the continuity of the metallic circuits, and the consequent obstruction to the flow of the current.

"When the ends have thus become plastic, the rods are pressed bodily toward one another, the metal spreads and unites, with the result that the ends of the rods are joined by a weld. At the point where the joint is, the extruded metal forms an annular ridge.

"The characteristics of this butt-welding process are that—

"(1) The current is concentrated by the rods themselves, the ends of which are being welded together.

"(2) The welding heat is caused by the resistance of the metal between the clamps and by the resistance of the joint at the ends of the rods.

"(3) The area of the weld is determined by the area of the work—i. e., the ends of the rods.

"(4) The metal is extruded around the joint.

"(5) As the rods are united, they approach one another bodily, so that allowance for this always must be made.

"The plaintiff was formed to develop this Thomson invention. It has been engaged in the business of making and leasing machines for performing this process of butt-welding. It has also granted licenses, as, for example, to the other complainant, the Universal Company, which had a license for spot-welding, in 1909, which refers to prior licenses for 'spot-welding,' granted in 1904.

"These Thomson patents protected this business, for they covered broadly the process and product of electric welding, as Thomson's invention was a true pioneer invention, having created the art of electric welding.

"But the underlying Thomson patents disclose as his only specific application of his fundamental invention one which was of limited utility, namely, the electric welding of the butt ends of two rods. But until Harmatta's invention, by which for the first time in the art it was practical and feasible by the use of new principles of operation to unite two thin plane sheets of metal together by electric welding, at any spot or at several spots of their contacting surfaces, no practical application of Thomson's invention of electric welding was made beyond that of the butt-welding originally disclosed by him in his patents of 1886, in spite of the efforts of himself and other inventors."

In order to make clear the state of the art, it was necessary to explain, as we have just done, the primary inventions covered by the patents of Elihu Thomson of 1886. These constitute the foundation of the whole art of electric welding, and the patent now in suit, as other secondary patents to which we may now refer, must be regarded as developments or branches of Thomson's original invention, and as merely subsidiary inventions or improvements. There have been other subsidiary inventions, as, for instance, the lap-roller process, invented also by Thomson, by which the method of uniting the overlapping edges of two sheets of metal by a lap-weld was devised, and by virtue of which some other secondary inventions were made practicable; all of which may be regarded as growing out of the inventions of 1886, but all of which were in different fields from the spot-welding invention now un-

der consideration, and were in no way subsidiary to it or incidental thereto, so that neither the one nor any of the others anticipated Harmatta's invention or were infringed by it or infringed it. Although all growing out of the same root, they were independent branches. Consequently, we have only to consider further the following alleged defenses to the complainants' bill, namely:

That there is no patentable invention in welding separated spots.

That appellants' attempted distinctions are without basis.

That there was no distinction between roller electrodes covering the entire amount of the overlap, and Harmatta's process.

That Thomson's sheet patent, No. 496, 019, showed sheet metal united by soldering, and thus anticipated.

That it also showed electrodes having area less than the contacting area, as in Harmatta.

That the Thomson process is the same as Harmatta's, the difference being in the amount of pressure and current only, and that generally there was no showing of invention by Harmatta's patent.

That the appellee's does not infringe,

And that Harmatta's patent is invalid by reason of changes since the original application.

Returning to the defenses based on the roller electrode process, or other processes devised with reference to overlapping sheets, it is all too plain that neither in its practical operation nor in its result was there any resemblance to the spot-welding such as to require discussion. It is quite plain that the attempts in that direction were too experimental to form the basis of any sound defense; indeed, that defense, and the proposition of accomplishing the work by soldering were each in an art so remote as to require no attention beyond these brief references thereto. These observations apply to all those lines of defense which rest upon the attempt to compare the size of contact spaces or areas mathematically, because the spot-welding has nothing in common with such attempts; and, furthermore, a study of all these special defenses going to the proposition that spot-welding, as shown by Harmatta, was in any way anticipated, falls to pieces, because there was nothing in them indicating an element of commercial success, and in this art, which was special and practicable, the art for rapid and inexpensive or cheap product was the first element of success. It is enough to repeat what we have already said generally; that is, in all these defenses of anticipation there is nothing which includes practicable utility.

Apparently much reliance is placed upon the claim that the application for the patent, during the many years it was pending, had been essentially changed, and so lost its validity. It originally embraced, not only spot-welding, but line-welding, and line-welding was not abandoned until after the alleged infringers in this case had constructed the machine with which they were operating when the bill was filed. The patent was applied for on December 3, 1903, and was not issued until December 3, 1912; but the claim for spot-welding was always in the application. The alleged infringing machines were first constructed in 1908; in 1910 the application covered both spot-welding and line-welding. It was then amended by striking out all claims for line-welding;

so, therefore, perhaps no profits can be recovered for anything done prior to the amendment, and it is a question to be considered whether or not an injunction can go against machines constructed before the amendment was made, or, if at all, then to what extent.

We have not been called upon to give consideration to any questions of this character, and the bill and briefs in support of the bill do not suggest any qualified decree in the matter whatever. The bill must, of course, be sustained, in view of the propositions we have already announced; and in view of the further proposition that the presumptions in favor of the patent are so far supported in this case by the insistency of the defense, and the comparatively enormous expense involved in maintaining it, we cannot question the present validity of the patent with reference to all propositions involved in the word "patentability." Nevertheless, the case is not put in such form as to enable us to go to a final judgment without further investigation. Indeed, it is not positively established what the proceedings of the respondents have been since the patent issued. The nearest that comes to it is the admissions of the treasurer of the Barney & Berry Skate Works, the nominal respondents in this case, that the respondents had been using an infringing machine "before February, 1913," and "just before that time." There was also testimony of a witness for the complainant that he had seen the alleged infringing machines in operation on January 9, 1913, and that the ends of the electrodes on the machines were all about a quarter of an inch in diameter.

Under the circumstances, we can only enter a qualified judgment.

The decree of the District Court appealed from is reversed, and the case is remanded to that court for further proceedings not inconsistent with the opinion passed down on this 5th day of October, 1915, and the appellants recover their costs of appeal.

CONSOLIDATED CONTRACT CO. et al. v. HASSAM PAVING CO. et al.

(Circuit Court of Appeals, Ninth Circuit. October 11, 1915.)

No. 2505.

1. PATENTS ⚷328—VALIDITY AND INFRINGEMENT—PAVEMENT AND PROCESS OF LAYING SAME.

   The Hassam patents, No. 819,652, for a pavement and process of laying the same, No. 851,625, for a process of laying pavement, and No. 861,650, for an artificial structure and process of laying the same, also relating to a pavement, were not anticipated and disclose invention; also *held* infringed.

2. PATENTS ⚷26—INVENTION—COMBINATION OF OLD ELEMENTS.

   While the mere bringing together of old elements, which in their new places do no more than their original work, is not invention, if they coact with each other in their new and unitary organization, so as to produce a more beneficial result than by their separate operation, it may constitute patentable invention.

   [Ed. Note.—For other cases, see Patents, Cent. Dig. §§ 27-30; Dec. Dig. ⚷26.

   Patentability of combinations of old elements as dependent on results attained, see note to National Tube Co. v. Aiken, 91 C. C. A. 123.]

⚷For other cases see same topic & KEY-NUMBER in all Key-Numbered Digests & Indexes

3. PATENTS ⟹112—SUIT FOR INFRINGEMENT—DEFENSE OF INVALIDITY—BURDEN AND DEGREE OF PROOF.

The granting of a patent is prima facie evidence that the patentee is the first inventor of the device or process and of its novelty, and a party alleging invalidity, not only has the burden of proof to establish such defense, but every reasonable doubt should be resolved against him.

[Ed. Note.—For other cases, see Patents, Cent. Dig. §§ 162–165; Dec. Dig. ⟹112.]

4. PATENTS ⟹53—ANTICIPATION BY PRIOR USE—ABANDONED EXPERIMENT.

A single experiment with a pavement, which was unsatisfactory and was abandoned, is not sufficient in law to anticipate a successful patent.

[Ed. Note.—For other cases, see Patents, Cent. Dig. § 71; Dec. Dig. ⟹53.]

5. PATENTS ⟹283—SUIT FOR INFRINGEMENT—ESTOPPEL.

That a city, in soliciting bids for paving, at the instance of the owner of patents specified the patented pavement, does not justify one who underbid the owner of the patents in infringing the same, nor estop such owner from suing for the infringement.

[Ed. Note.—For other cases, see Patents, Cent. Dig. §§ 448–450, 452; Dec. Dig. ⟹283.]

Appeal from the District Court of the United States for the District of Oregon; Robert S. Bean, Judge.

Suit in equity by the Hassam Paving Company and the Oregon Hassam Paving Company against the Consolidated Contract Company and the Pacific Coast Casualty Company. Decree for complainants, and defendants appeal. Affirmed.

For opinion below, see 215 Fed. 114.

Suit by appellees (plaintiffs in the court below) against the appellants (defendants in the court below) for an injunction to prohibit alleged infringement by the appellants of letters patent No. 819,652, for a pavement and process of laying the same, issued to Walter E. Hassam by the United States Patent Office on May 1, 1906; letters patent No. 851,625, for a process for laying pavement, issued to Walter E. Hassam by the United States Patent Office on April 23, 1907; and letters patent No. 861,650, for an artificial structure and process of laying the same, issued to Walter E. Hassam by the United States Patent Office on July 30, 1907.

Letters patent No. 819,652, issued by the United States of America to Walter E. Hassam on May 1, 1906, is for a pavement and process of laying the same. The method of construction, as embodied in the specifications, is as follows: The street is first dug out to the proper depth for the subgrade, which is rolled, if needed. Broken stone or gravel is then spread to a proper depth, and rolled with a steam roller, or compressed by any suitable means, until the voids between the stone are small and the surface even. When the stone or gravel has been compressed to the desired closeness and firmness, it is grouted with a mixture of cement, sand, and water. All the voids are filled with the cement in the grouting operation. The cement is then allowed to stand until perfectly hard, and a solid foundation is thus obtained for brick, stone, or wood block, or any other form of paving, which will sustain a heavier load than if mixed concrete is used. Instead of brick, stone, block, or any of the surfaces mentioned, the patentee states that he preferably pours a thicker grout of cement, sand, and water over the foundation to the required depth, spreads fine stone or gravel upon it, and rolls or compresses said broken stone or gravel into the grout while it is green, or before it is set, making a smooth, but gritty, surface.

Claim 1 of the patent, which is alleged to have been infringed by the appellants, is as follows: "A road or pavement consisting of a bottom layer

of hard rolled uncoated stone, a grouting of cement placed upon said stone and filling all the voids therein, and a suitable surface placed on said grout."

Letters patent No. 851,625, issued by the United States of America to Walter E. Hassam on April 23, 1907, is for a process for laying pavement. The specifications state that this invention relates to a process of constructing stone or gravel roads or pavements, and is designed particularly as an improvement on the invention embodied in letters patent No. 819,652, above referred to, and issued to Hassam on May 1, 1906. It is stated that the object of the invention is to lay the pavement, and particularly the grout, in such manner that all the voids in the stone layer will be filled therewith, and no holes will be left in the surface; that in the old manner of laying the pavement the rolling was stopped after the stone had been compressed, whereas in the process covered by this patent the rolling is continued during and after the grouting is added.

Claim 2 of this patent is alleged to have been infringed by the appellants. It is as follows: "The process of constructing a road pavement, which consists in laying a layer of uncoated stone, compressing said stone layer until the voids are small, agitating the mass to expel the air and fill the voids between the stone with said grout, and placing a surface on the mass thus formed."

Letters patent No. 861,650, issued by the United States of America to Walter E. Hassam on July 30, 1907, is for an artificial structure and process of laying the same. In the specifications the patentee refers to his former patent of May 1, 1906 (No. 819,652), and states that he therein described a structure in which broken stone, gravel, or the like has been placed on the bottom of an excavation and rolled to compact the same, and the broken stone or gravel has been treated with a grouting or the like, subsequent to its rolling, and a suitable wearing surface has been placed thereon. He further states that the principal object of the invention covered by this patent is to provide for improving the surface layer, and the improved surface layer can be used, either with those constructions and methods which involve the use of previously coated stone, or with that which is carried out with uncoated stone afterwards grouted. All of the claims of this patent are alleged to have been infringed by the appellants. They are as follows:

"1. An artificial structure, comprising a foundation layer of hard rolled stone, having grouting filling the voids therein and a surface layer comprising a continuation of said grouting, containing fine stones compressed into its surface.

"2. A road or pavement, consisting of a bottom layer of hard rolled uncoated stone, a grouting of cement placed upon said stone and filling all the voids therein, and a top layer of smaller uncoated stones compressed into the surface of said grouting before it sets.

"3. A road or pavement consisting of a bottom layer of stone, a grouting placed upon said stone and filling all the voids therein, and a top layer of smaller uncoated stone compressed into the surface of said grouting before it sets.

"4. The method of making a pavement which consists in rolling uncoated stone, placing a thin grouting thereon, allowing the grouting to run down and fill the voids in the layer of stones, and compressing fine uncoated stones into said grouting before it sets."

Subsequent to the bringing of this suit, and prior to the alleged acts of infringement, Walter E. Hassam assigned all his right, title, and interest in and to the patents in suit to the Hassam Paving Company. The appellee Oregon Hassam Paving Company exercises the exclusive right to use and make the improvements covered by the patents in suit in the state of Oregon, by virtue of a grant from the Hassam Paving Company.

In the spring of 1911 the city of Portland, Or., through its city council, published a notice of street paving. The specifications for the work as contained in the notice covered the process embodied in the patents involved in this suit, and it was particularly specified in such notice that "Hassam pavement" was to be laid. The appellant Consolidated Contract Company having underbid the Oregon Hassam Paving Company, the contract for the work was

awarded to it. The appellant Pacific Coast Casualty Company is surety upon the bond of the Contract Company given to the city of Portland for the faithful performance of the work. The Contract Company having proceeded with the laying of pavement in the manner described in the specifications annexed to its contract with the city of Portland, the present suit was instituted against it by the appellees for alleged infringement of the above-mentioned patents.

The court below found that the patents in suit were valid and that the appellants had infringed the same. An injunction was accordingly awarded, restraining the appellants from making or selling, or in any way using or disposing of, pavements and structures embracing the inventions or improvements described in the letters patent in suit, and the cause was referred to a master for an accounting of all profits which the appellants had received by the manufacture, use, or sale of pavements and structures in violation of the patents in suit.

Jesse Stearns and John H. Hall, both of Portland, Or., for appellants.

Louis W. Southgate, of Worcester, Mass., and Carey & Kerr, of Portland, Or., for appellees.

Before GILBERT, ROSS, and MORROW, Circuit Judges.

MORROW, Circuit Judge (after stating the facts as above). [1] The defendants place their defense on three grounds:

First. That the processes patented are the result of mechanical skill, and not the product of inventive genius, and the patents are therefore void.

Second. That the processes embodied in the Hassam patents were anticipated by prior patents, by prior use, and by prior publications.

Third. That the appellees, by their acts in inducing the officers of the city of Portland to include their process of paving in an ordinance defining the method, manner, and kind of street pavement to be laid in the city of Portland, with knowledge that all street improvements must, under the city charter, be let to the lowest responsible bidder, waived all rights under their patents, and granted to the appellants the right to utilize the processes covered thereby.

1. There are five elements entering into the construction of a pavement in accordance with the alleged infringed claims of the patents in suit: (1) A bottom layer of uncoated stone. (2) The rolling of the stone. (3) A grouting of cement placed upon the stone and filling all the voids therein. (4) Agitation of the mass to expel the air and fill the voids. (5) A top layer of small uncoated stones compressed into the surface of the grout before it sets.

[2] It is contended by the appellants that each of these elements had been employed, prior to the issuance of the patents, in the construction of roads or streets, or in structures. But this of itself would not negative invention. It is true the mere bringing together of old elements, which in their new places do no more than their original work, and do not co-operate with other elements in doing something new and useful, is not invention; but if they coact with each other in a new and unitary organization, so as to produce a more beneficial result than by their separate operation, it may constitute a patentable combination. Loom Co. v. Higgins, 105 U. S. 580, 591, 26 L. Ed. 1177; Expanded Metal Co. v. Bradford, 214 U. S. 366–381, 29 Sup. Ct. 652, 53 L.

Ed. 1034; National Tube Co. v. Aiken, 163 Fed. 254, 91 C. C. A. 114. In the present case it does appear that some of the features covered by the Hassam patents were used in the construction of roads and streets long prior to the issuance of the patents to Hassam; but it does not appear that all of the elements entering into the processes as described in and covered by the Hassam patents were ever before joined together or utilized as a combination in the manner therein disclosed. In the type of road known as macadam, broken stone was used; but the building thereof was purely mechanical. Concrete grout played no part in the construction of such road. In the construction of the ordinary cement concrete road foundation broken stone was used; but it was thoroughly covered by and mixed with the cement prior to being placed in position. In the Hassam method the broken stone is applied to an uncoated condition, the stone is then rolled, and the cement grout is then poured into the mass for the purpose of filling the voids or interstices. This, indeed, so far as the foundation work is concerned, is the distinguishing feature of the Hassam process —the grouting or cementing of the broken uncovered stones after the laying and rolling of the latter. We think this process, considered in connection with the process of agitating the mass during and after the application of the cement grout, as embodied in the second Hassam patent, and the compressing of fine stones into the grout before hardening, as embodied in the third Hassam patent, called for something more than the application of mechanical skill to well-known methods of road building.

[3] We reach this conclusion without resorting to the well-known rule that the burden of proof is upon the defendant to establish the defense that the patent is void for the want of invention or discovery. The grant of the letters patent is prima facie evidence that the patentee is the first inventor of the device, or the discoverer of the art or process described in the letters patent, and its novelty. Smith v. Goodyear Dental Vulcanite Co., 93 U. S. 486, 489, 23 L. Ed. 952; Lehnbeuter v. Holthaus, 105 U. S. 94, 96, 26 L. Ed. 939; San Francisco Cornice Co. v. Beyrle, 195 Fed. 516, 518, 115 C. C. A. 426. But there is a more exacting rule, that might be applied in this case, which holds that, not only is the burden of proof to make this defense upon the party setting it up, but that every reasonable doubt should be resolved against him. Coffin v. Odgen, 18 Wall. 120, 124, 21 L. Ed. 821; Cantrell v. Wallick, 117 U. S. 689, 695, 6 Sup. Ct. 970, 29 L. Ed. 1017; San Francisco Cornice Co. v. Beyrle, supra. In the first of these cases, which was a suit for infringement, the defense was a prior invention, and in respect to this defense the court observed:

"The invention or discovery relied upon as a defense must have been complete, and capable of producing the result sought to be accomplished; and this must be shown by the defendant. The burden of proof rests upon him, and every reasonable doubt should be resolved against him."

In the second case the same defense in a suit for infringement was set up, and there the court again stated the rule to be:

"The burden of proof is upon the defendants to establish this defense. For the grant of letters patent is prima facie evidence that the patentee is the

first inventor of the device described in the letters patent and of its novelty. * * * Not only is the burden of proof to make good this defense upon the party setting it up, but it has been held that 'every reasonable doubt should be resolved against him.' "

It follows that we are clearly of the opinion that the defendants have not made out their defense that the device or process described in plaintiff's patent was the result of mechanical skill, and not the product of inventive genius.

2. In support of the defense of anticipation, the appellants rely upon a patent for pavement issued to one John Murphy on March 8, 1881, a patent for concrete pavement issued to Thomas F. Hagerty on October 22, 1889, a patent for concrete pavement issued to George A. Bayard on April 24, 1888, and a patent for pavement or roadway issued to Frederick J. Warren on June 4, 1901.

The processes covered by these patents are readily and clearly distinguishable from the processes embodied in the Hassam patents. Under the Murphy patent the broken stone or slag is grouted *before rolling*. The first Hassam patent calls for a "bottom layer of *hard rolled uncoated stone*." In the Bayard patent the foundation consists of broken stone and ashes or pebbles, and a second layer consists of stone, cinders, and pebbles mixed with tar. Ashes, cinders, and tar play no part in the Hassam processes. In the Hagerty patent there is no preliminary hard rolling of the broken stone, nor is there any filling of the voids between the stones with grout. In the Warren patent no grouting whatever is used.

[4] With respect to alleged prior uses, the only testimony which we deem necessary to particularly advert to is that of J. Y. McClintock, a witness for the appellants. In 1893 McClintock was city surveyor of Rochester, N. Y. Owing to the unsatisfactory condition of the streets, he asked and obtained permission from the city authorities to try an experiment on one of the streets. The experiment was not satisfactory, but, as the witness said, "demonstrated that I might have something of practical value, but that I had not carried it far enough, or experimented enough at length, to demonstrate its practical value." The pavement laid by McClintock was never used elsewhere or tried again. We agree with the learned judge of the court below that McClintock's venture comes clearly within the category of an abandoned experiment, which is not sufficient in law to anticipate a successful patent. The Cornplanter Patent, 23 Wall. 181, 23 L. Ed. 161; Smith v. Goodyear Dental Vulcanite Co., 93 U. S. 486, 23 L. Ed. 952; Deering v. Winona Harvester Works, 155 U. S. 286, 15 Sup. Ct. 118, 39 L. Ed. 153; King County Raisin & Fruit Co. v. U. S. Consolidated Seeded Raisin Co., 182 Fed. 59, 104 C. C. A. 499.

We have examined with care each of the prior publications, consisting of excerpts from encyclopedias, dictionaries, scientific notes, etc., introduced by the appellants and claimed by them to show anticipation. The rule is that a description in a prior publication, in order to defeat a patent, must contain and exhibit a substantial representation of the patented improvement in such full, clear, and exact terms as to enable any person, skilled in the art or science to which it appertains, to make, construct, and practice the invention patented. It must be

an account of a complete and operative invention, capable of being put into practical operation. Seymour v. Osborne, 78 U. S. (11 Wall.) 516, 20 L. Ed. 33. Tested by this rule, the publications in the present case are not sufficient to support a claim of anticipation.

[5] 3. On the question of estoppel the learned judge of the court below was of opinion that the fact that the city of Portland saw fit to specify Hassam paving for its streets at the request of the holder of the patents did not excuse one who underbid the owner of the patents for an infringement thereof, any more than if the owner of a rock quarry should induce the city to specify rock for use in a street of a quality to be obtained only from his quarry would justify the successful bidder in appropriating the rock without paying for it. This is undoubtedly true. Nor does the application of such a rule work any hardship upon the appellants. Having bid for and secured the contract for the paving of the city streets, the appellants had only to enter into a satisfactory arrangement with the appellees for the payment of royalties for the use of the processes covered by the Hassam patents in the performance of the contract with the city of Portland. This they did not do. Under such circumstances, the defense of estoppel is not open to the appellants.

The decree of the court below is affirmed.

U. S. SLICING MACH. CO. v. G. S. BLAKESLEE & CO.

(Circuit Court of Appeals, Seventh Circuit. October 13, 1915.)

No. 2231.

PATENTS ⟹328—INVENTION—GUARD FOR MEAT-SLICING MACHINES.

The Roest patent, No. 897,018, for a knife guard for meat-slicing machines, is void for lack of patentable novelty and invention, in view of the prior art.

Appeal from the District Court of the United States for the Eastern Division of the Northern District of Illinois; Ferdinand A. Geiger, Judge.

Suit in equity by the U. S. Slicing Machine Company against G. S. Blakeslee & Co. Decree for defendant, and complainant appeals. Affirmed.

Frank T. Brown, of Chicago, Ill., for appellant.

John L. Jackson, of Chicago, Ill., for appellee.

Before BAKER, KOHLSAAT, and MACK, Circuit Judges.

KOHLSAAT, Circuit Judge. The patent in suit, No. 897,018, was held invalid by the District Court for want of patentable novelty. It was granted August 25, 1908, for a knife guard for meat-slicing machines, to one Roest, and afterwards acquired by appellant. There are seven claims, of which only 1 and 2 are in suit. They read as follows:

---

1. A guard for that part of the rotary circular knives of meat-slicing machines where the actual cutting is effected, comprising a bar which is so shaped as to follow the contour of the knife edge and is arranged a little behind and in advance of the edge of the blade and means for holding the bar in position.

2. A guard for that part of the rotary circular knives of meat-slicing machines where the actual cutting is effected, comprising a bar which is so shaped as to follow the contour of the knife edge and is arranged a little behind and in advance of the edge of the blade and adjustable means for holding the bar in position.

The defense rests upon alleged invalidity.

It was not new to guard circular saws and cutting knives at all dangerous points, except the necessary cutting edge, which of necessity must be exposed sufficiently to admit of contact with the material to be sawed or cut. The patent applies only to protection of the cutting edge, particularly that of a revolving knife or blade. This protection consists of a bar or rod mounted rigidly upon or adjacent to the frame of the cutter, but made adjustable with reference to the edge of the knife. It is located slightly in advance of the knife and far enough back thereof and toward the operator to admit the passage of the slice to be cut off from the bulk onto the receiving table or the operator's hand. It is curved to follow the periphery of the circular knife, but not in the same plane therewith. This in substance constitutes the claimed invention. The device as a whole is durable and simple.

Appellant claims that there had long been a demand for such a guard; that engineers and others skilled in the art had sought in vain for protection from the cutting edge without interfering with the cutting facilities of the slicer. The evidence hardly justifies the assertion, though it will readily be seen that such protection was desirable. That any device which could accomplish that end must be, in substance, like that of the patent, seems to be conceded, since the two things necessary were (1) a guard out of alignment with the blade, and (2) near enough to the forward edge of the knife to prevent the operator from feeding his fingers to the cutting edge, and yet secure the advantages aimed at.

The novelty, if any, in the device, consisted in paralleling the knife with the guard at a desired distance laterally therefrom and in advance thereof; the former being spaced according to the thickness of the slice desired. It will be seen that the guard might easily be adjusted to act both as guard and gauge, protecting the operator while regulating the thickness of the slice. Some point is made by appellant as to this double function in commenting upon the prior art. It is well settled that the results attained, and not the names given to the parts, determine the question of equivalency. Machine Co. v. Murphy, 97 U. S. 120, 125, 24 L. Ed. 935. It will be understood that the patent calls for the protecting bar and means for applying and holding same in position. It is necessary, therefore, to consider only those elements which it is claimed differentiate the slicer from the prior art, and those are, as above stated, the curved bar a little in advance and behind the cutting wheel, made adjustable with reference to the wheel and resting upon the frame or upon brackets supported independently

of the knife. Otherwise the device of the patent is conceded to be that of the prior art.

We confess our inability to see invention in supplying the protecting bar. It will not protect unless it is in advance of the cutter, and it will not operate unless placed behind the cutter. The evil and its remedy seem so obvious that we fail to see how the device could escape the attention of one possessed of ordinary skill, the need of it being urgent. But assuming that, all things considered, some slight degree of invention apart from the prior art is shown, carrying the art from an unprotected to a fairly well guarded cutting arc of a cutting edge, was it new with appellant? Some 25 prior patents are set up in the answer. It will suffice if any of them show the protecting guard, so arranged at or near the cutting edge as to substantially anticipate or plainly suggest the guard of the patent in suit.

The German patent, No. 5,019, issued to Clement, shows a knife guard set a little behind and in advance of the cutting portion of this knife, conforming in contour to the knife edge and protecting the so-called delivery side. True, it is not stationary, because the knife is not. It presents itself in a protecting capacity along the whole edge of the swinging blade. While the form and operation of the cutting device are different from those of the patent in suit, the latter being swinging blades, the concept is the same. It protects the operator from the cutting edge; it does not interfere with the efficiency of the blade in accomplishing what it was designed for. As an element of the combination, the guard of the patent in suit would be the equivalent of that of Clement. We do not consider the presence of an independent gauging device as of moment. Neither do we regard the difference between the forms of guarding devices, as to whether they are round or square or flat, as constituting any patentable distinction.

Patent No. 811,452, to E. F. Smith, dated January 30, 1906, and patents Nos. 731,516 and 830,935, granted to same patentee, show what in the patent is called a laterally adjustable gauge plate secured to the forward end of a reciprocating carriage or frame. This gauge plate is stationed, when the device is in operation, a little in advance of the cutter to the extent desired. This latter is a rotary knife disk. This gauge is only claimed as a spacer for slicing, operating in conjunction with a stop plate. Its edge is curved to correspond to the contour of the cutting edge of the rotary knife. The space between the cutter edge and the concave edge of the gauge is shown in the drawings to be somewhat wide, evidently devised with the intention of using it only as a spacer or gauge. Nevertheless, it measurably acts as a guard. In the model shown, it seems to serve all the purposes of the device of the patent in suit. It is not adjustable longitudinally with reference to the cutting edge of the rotary blade, but travels with the bodily movement of the blade. At line 71, page 1, in Smith's patent, No. 830,935, the specification describes a transversely adjustable gauge plate as extending in a plane parallel with the cutting face of the revoluble cutter and located at a point in advance of the cutter and adapted to be adjusted transversely in relation to the cutter for varying the thickness of the slices to be cut. The gauge or guard is in the form of a plate and not, as in Roest, a bar or rod.

Appellee insists that by cutting away the back portion of the plate there would remain a bar or rod substantially like that of the patent. There seems to be no function of the gauge attributable to the use of a bar in preference to a plate, and no reason is perceived why the one is not the equivalent of the other as a guard. Objection is raised to the elevation of the plate, on the ground that it leaves a portion of the cutting wheel exposed. It will be seen that the top of the frame covers and shields the upper cutting edge of the rotary cutter. The guard is as high as necessary. It presents all the features and protecting provisions of the patent so far as protection is concerned, and we deem it anticipatory of whatever of patentable novelty Roest lays claim to.

Appellee places much reliance upon Long patent, No. 659,683, issued October 16, 1900, for a bread cutter. This patent shows one or more knife arms provided with cutting edges. The arms rotate with a swinging motion across the forward end of the feed trough. The blades are practically inclosed on both sides—the rear face by a slotted cylindrical guard; the front face by a combined gauge and guard. The cutting edge of the blades is guarded by a wide gauge and guard, the inner face of which conforms to the curve of the cutting edges of the arms as they swing, and extend a little in advance thereof. The gauge plate is located far enough from the plane of the blades to afford room for the desired slice and is adjustable toward and from said blades. The cutting edge is not entirely protected on the gauge side, but is substantially so. The gauge travels with the cutting blade. The difficulty to be overcome was the same, no matter what the form and mode of operation of the cutter.

Of the remaining patents which are cited, we need not give a description. More or less specifically, they disclose means for protection from cutting edges. We deem it sufficient for the purposes of this suit to point out the Clement, Smith, and Long patents. These disclose the gist of the alleged conception of Roest. After them there was no field for inventive genius along the line of the Roest patent. While we might, in the absence of any prior art, be able to find invention in lessening the dangers which follow in the wake of the use of rapidly revolving cutting wheels or arms, nevertheless, under the state of the art as produced on the trial of this case, we see no escape from the defense of lack of patentable novelty.

The decree of the District Court is therefore affirmed.

UNDERWOOD TYPEWRITER CO. v. FOX TYPEWRITER CO.

(Circuit Court of Appeals, Sixth Circuit. October 11, 1915.)

No. 2580.

PATENTS ⟹328—INFRINGEMENT—TYPEWRITING MACHINE.

The Wagner patent, No. 633,672, for improvements in typewriting machines, is a narrow one in a crowded art, and not entitled to a broad construction, nor to a liberal application of the doctrine of equivalents. So construed, claim 17 *held* not infringed by a machine which does not have the "independently movable parallel shafts" on which the feed-rollers are mounted, which are made one of the elements of the claim.

Appeal from the District Court of the United States for the Western District of Michigan.

Suit in equity by the Underwood Typewriter Company against the Fox Typewriter Company. Decree for defendant, and complainant appeals. Affirmed.

Briesen & Knauth, of New York City, and Wilson & Johnson, of Grand Rapids, Mich., for appellant.

Chappell & Earl, of Kalamazoo, Mich., for appellee.

Before WARRINGTON and KNAPPEN, Circuit Judges, and SATER, District Judge.

SATER, District Judge. The Wagner patent, No. 633,672, for improvements in typewriting machines, was issued on September 26, 1899. It purports to disclose improved means for spacing the feed-rollers which co-operate with the platen to bring about the line feed of the paper. The plaintiff, as assignee of the patent, charged the defendant with infringement of claims 17, 22, 23, and 24. The trial court found in favor of the defendant. The plaintiff prosecutes an appeal from so much of the decree as found noninfringement of claim 17, which claim is as follows:

"17. The combination with a paper-platen of independently movable parallel shafts, a plurality of feed-rollers, mounted on each of said shafts, and means for simultaneously throwing all of said feed-rollers out of contact with the platen."

In treating of certain claims of this same patent other than that now under consideration, it was held in Underwood Typewriter Co. v. Typewriter Inspection Co., 184 Fed. 329, 332, 106 C. C. A. 359 (C. C. A. 2), that the patent is a narrow one in a crowded art, and not entitled to a broad construction, nor to a liberal application of the doctrine of equivalents. Our study of the instant case with reference to claim 17 leads to the same conclusion. The limitations imposed on inventors by the state of the typewriter art noted in Underwood Typewriter Co. v. Royal Typewriter Co., 224 Fed. 477, — C. C. A. — (C. C. A. 2). The functional and general character of claim 17 requires for its interpretation resort to the drawings and the descriptive portion of the specification.

The drawings show a platen, below which are two parallel shafts spaced apart, each bearing a series of rollers. One of the roller shafts is held in a movable manner at each end by means of arms loosely surrounding a rod, intermediate of and projecting below the roller shafts, rigidly mounted in the framework of the machine, and provided with ratchet-faced hubs adapted to co-operate with ratchet-faced collars. Attached to each of the collars is a spring, the inner end of which is secured to the hub of an arm on whose outer end is mounted the other roller bearing shaft. The springs normally hold the rollers in contact with the platen, their tension being regulated by the collars. The arrangement is such that each of the roller shafts is independently movable about the intermediate rod (which serves as a support to both of them), and that the above-mentioned springs, acting upon the roller shafts, tend to turn them in opposite directions about the central or intermediate rod, and thus to hold the rollers against the platen or the paper on it. When the paper inserted in and passing through the machine reaches the rear feed rollers, such rollers, on account of the paper passing between them and the platen, are simultaneously drawn away from the platen; but the other or front series of rollers still remain in contact with the platen, until, by its turning, such last-named series of rollers also grip the paper. They also are then forced away from the platen, but independently of the first or rear series of rollers. When the rollers are thrown entirely out of contact with the platen, the two roller shafts move simultaneously with the intermediate rod. The rollers are removed from contact with the platen by means of a lever connected by an arm with a rod shown at *76* on the drawings, which is moved laterally or longitudinally and parallel with the intermediate rod. The operation of the lever causes certain sliding arms to ride up cams formed integral with and secured to the intermediate rod, thereby carrying the roller shaft out of contact with the surface of the platen. The sliding arms, which assume a rotary movement when the rollers are removed from contact with the platen, are restored to position by means of a spring specially designed for that purpose. If in the operation of the machine it is desired for the purpose of adjusting or straightening the paper or for other cause to throw the rollers out of contact with the platen, the pressure of the independent feed-rollers is released in the manner above stated by means of the above mentioned lever.

The defendant employs four roller shafts, instead of two, all of which are parallel with the platen. They are in pairs, and are each about one-half the length of those in the plaintiff's device. Each pair is within cradle-shaped frames. The defendant also uses an intermediate rod about which the cradle-shaped frames connecting the roller shafts rock, each frame rocking independently of the other. The frames are independent of each other, excepting that both are mounted on the intermediate supporting rod. This rod, unlike the similarly located rod in plaintiff's device, is not rigidly mounted in the framework of the machine. The rollers on the shafts, like plaintiff's, contact with the platen. Although the shafts are movable and parallel, they do not move independently of each other. When one moves in

one direction—upward, for instance—the other moves in the opposite direction. As independently movable shafts are made one of the elements of plaintiff's claim in question, the absence of shafts of that character in defendant's device defeats the charge of infringement. When the paper passing between the rear rollers in the defendant's machine lifts such rollers, the front rollers are necessarily moved downwardly against the platen to the extent of the thickness of the paper. The difference in this respect in the two mechanisms is due to the attachment in defendant's device of the roller shafts to the cradle-like crossbars, which rock about the intermediate rod, whereas in plaintiff's device there is no rocking motion present or contemplated, because each roller shaft, being connected independently of the other to the rigidly fixed intermediate rod, moves independently of such other.

The defendant's device also differs from that of plaintiff, in that in throwing the defendant's rollers out of contact with the platen there is no rotation whatever of the arms which carry the roller shafts, but the entire roller framework is carried away from the platen without rotation. This is effected by supporting the intermediate rod on arms mounted on a rock shaft journaled at its ends in the framework of the machine, a handle being connected to one of the ends of such shaft. Attached to the framework of the machine are three springs which hold the rock shaft in position. The free ends of the springs rest under and against the intermediate rod—one spring being at each of its ends and another at its middle. These springs are not connected with the feed-roll mechanism, as are those in plaintiff's device, excepting that their free ends press against the intermediate rod. In the plaintiff's device the centers of the coiled springs are the same as that of the intermediate rod, one end of each spring being connected to one of the parallel roller shafts, and the other end to the other of such parallel shafts, the two roller shafts being thus connected by means of such springs. The springs in the two devices, therefore, perform their functions in a different way to accomplish the result of holding the rollers against the platen. To lower defendant's feed-rollers out of contact with the platen the handle is pressed down. This rocks a shaft and arms attached to it, and carries down the intermediate rod, and with it the entire frame-work embracing the rollers, which are thus carried bodily away from the platen, but without any relative change of their position laterally or longitudinally and without any rotation of the roller shaft. The defendant's roller shafts, when the rollers are thus disengaged from the platen, do not occupy, as do plaintiff's, a position with respect to the intermediate rod different from that occupied by them when in contact with the platen.

A determination of the case may be safely rested on the absence from the defendant's device of the element of independently movable parallel shafts called for by claim 17, but it will also be noted that there are radical differences in the construction of the two mechanisms which obviate the charge of infringement.

The District Court is affirmed.

PARKER v. AUTOMATIC MACH. CO.

(District Court, N. D. California, Second Division. July 19, 1915.)

No. 15632.

1. PATENTS ⟹328—VALIDITY AND INFRINGEMENT—BOX-MAKING MACHINE.
The Parker patent, No. 980,431, for a box-making machine, especially adapted to the making of boxes or crates for oranges, was not anticipated, discloses patentable invention and marks a distinct advance in the art of great value; the machine being automatic in operation after the parts of the boxes are fed into it, and capable of turning out 450 completed boxes per hour, as against 80 by the manually operated machines of the prior art. Also *held* infringed.

2. PATENTS ⟹243—INFRINGEMENT—UNITING TWO ELEMENTS OF COMBINATION IN ONE.
The joinder of two elements of a patented combination into one integral part, which accomplishes the purpose of both without changing the principle of operation of the combination, does not avoid infringement.
[Ed. Note.—For other cases, see Patents, Cent. Dig. §§ 382-384; Dec. Dig. ⟹243.]

3. PATENTS ⟹241—INFRINGEMENT—MACHINES.
A machine which is constructed on the same principle as that of a patent, and which has the same mode of operation, and accomplishes the same result, by the same or equivalent mechanical means, infringes the patent.
[Ed. Note.—For other cases, see Patents, Cent. Dig. § 380; Dec. Dig. ⟹241.]

In Equity. Suit by George D. Parker against the Automatic Machine Company. On final hearing. Decree for complainant.

Nicholas A. Acker, of San Francisco, Cal., for plaintiff.
Frederick S. Lyon, of Los Angeles, Cal., for defendant.

VAN FLEET, District Judge. Suit for infringement of letters patent No. 980,431, granted plaintiff for a box-making apparatus. While the patent by its terms covers machines for the manufacture of boxes generally, the particular device of the patent is designed and adapted to the making of the character of wooden boxes or crates commonly in use for the marketing and shipment of oranges. The device is distinctly automatic, in contradistinction to the older hand-operated machines of the art, and the evidence shows that it is the first successfully operating device of its kind to be produced, the value of which in the art may be best appreciated from the fact that, while with the older or hand-operated machines the output is about 80 boxes per hour, by the device of the patent they are manufactured at a rate approximating 450 per hour.

[1] Of the 40 claims of the patent, 17 of them—2, 3, 4, 6, 8, 9, 10, 11, 19, 20, 31, 34, 35, 37, 38, 39, and 40—are alleged to be infringed. As to all of these but claim 2, while denying their infringement, it was conceded by defendant at the argument that they are valid and unanticipated. As to claim 2 it is alleged to be invalid by reason of anticipation; but it is admitted that, if valid, defendant's device in-

fringes it. These admissions relieve the court of any necessity of considering the claims in connection with the prior art, excepting only as to claim 2, and as to that claim an examination of the evidence satisfies me that defendant's contention that it is anticipated is not well founded.

This leaves as the only question to be determined whether there is to be found in the offending device the combinative elements of the patent; and this, I think, may be ascertained from a more or less general comparison of the construction and operation of the two devices involved, as in my judgment, based not only upon the evidence in the record, but upon the results of a personal inspection and observation by the court of the two machines in actual operation, the results of which it was stipulated might be regarded as a part of the evidence, the question of infringement turns upon a consideration of two or three cardinal points as to which defendant claims that his device differs so essentially in principle and mode of operation from that of plaintiff as to avoid infringement—the plaintiff, on the other hand, claiming that these differences are but the result of mechanical changes by substituting elements of an equivalent nature, involving no characteristic variation in operation or principle.

Avoiding technical designations and details, the general construction of the plaintiff's device may be briefly, and I think sufficiently for present purposes, described thus: It is composed of a series of interrelated parts or mechanisms co-ordinating and working together in combination, consisting, first, of suitable hoppers for receiving the prepared material for the composition of the boxes, designated in the trade as "shook," with means for feeding this material to the constructive parts of the machine and carrying and assembling it on the nailing position; second, nailing mechanism, for nailing the parts together when so assembled; third, means for rotating or turning the partly completed box to present its successive sides or faces to the nailing mechanism for the receipt and nailing of the side pieces or slats; and, fourth, means for ejecting the completed box from the machine.

Its operation may be best described with reference to the particular character of box or crate it is designed to produce—a box having square ends and partition piece, dividing it into two compartments, with bottom, sides, and top composed of thin slats or boards, two on each face, so spaced as to admit of free circulation of air to the contents when packed. The different parts of the sawed material, or "shook," are placed in suitable hoppers provided at the rear of the machine; the end and partition pieces standing upright, or on edge, and the slats or side pieces piled in a transverse hopper or chute arranged above the position of the former. The end and partition pieces are then fed mechanically, one set at a time, edgewise into the machine, carried to proper position upon the nailing bases, and there held between rotating clamps or disks. These are followed by two side pieces, likewise fed mechanically and moved into proper register or position on the upper edges of the end and partition pieces, and are thereupon nailed thereto by the action of the nailing mechanism. The parts thus connected are then given a quarter turn, or rotation of 90

degrees, by the action of the rotating clamps, so as to present to the nailing mechanism the next succeeding face or side, to which a second set of side pieces are carried and nailed, when the structure is again given a quarter turn to present a third face, and a third set of side-pieces added in like manner. The box, being thus completed except as to the cover or top pieces (which are added by hand after packing), is then ejected from the machine. The entire operation, other than placing the material in the hoppers, is automatic, and repeated indefinitely or until the material is exhausted. It is a highly ingenious combination, working successfully, and, as indicated, the conception is a distinct advance in the art of great value.

The alleged infringing device of the defendant, of later production, is likewise an automatic box-making machine, but designed and adapted for the manufacture of lemon crates or boxes—a crate constructed in all material respects like an orange box, excepting as to shape; it having oblong or rectangular ends and partition piece, which give it a height greater than its width. The device is unpatented, but is being manufactured and sold by defendant in the same citrus districts of the state in which plaintiff's device finds a market. In a general way it is the counterpart of the plaintiff's device. It has the same co-ordination of working elements or combination of co-operative mechanisms—that is, hoppers and feeding means, nailing mechanism, holding clamps with means for rotation, and means for ejecting the completed structure—and there seems to be no question made as to the two machines performing the same succession of operations, in substantially the same general way, and with like results. While, as stated, the defendant's device, as thus far produced, is specially adapted to the making of lemon boxes, the evidence shows that by slight mechanical changes it could be readily adapted to the making of orange boxes or boxes of other forms. The differences in character and construction claimed by defendant as distinguishing its device from that of plaintiff and avoiding infringement are principally these: First, the principle on which the feeding mechanism works (a) as to the means by which the ends and partition pieces are carried from the hoppers and assembled on the nailing position, and (b) as to the manner in which the positioning of the side slats for nailing is accomplished; second, the rotating mechanism, by which the box is turned during the process of construction; and, third, the means for ejecting the completed box from the machine. These claimed distinguishing features will be noticed in their order.

1. In the device of the patent, the end and partition pieces are carried in their upright position, edgewise, into the machine and below the position of the nailing bases, onto a lift or elevator, the latter then raising them to their position on the nailing bases, the elevator thus forming an element in the feeding mechanism. In the defendant's device, this elevator feature is eliminated; the end and partition pieces being fed into position by a direct lateral movement from the hoppers onto the nailing bases, which are in the same horizontal plane. It is claimed that this difference in form "totally changes the co-operative principle of action of the mechanism and the mode of operation of

the machine, and permits it to utilize radically different inter-relations of the other mechanisms," which it is then sought to point out. It is quite true that this change brings the necessity of some minor changes in other respects in the inter-relation of other parts of defendant's device; but I am wholly unable to perceive that it effects any difference in principle in the co-operative action of defendant's machine which can be held to distinguish it in any substantive way from plaintiff's.

Defendant's contention is, in fact, that the so-called "elevator" feature of plaintiff's device is its "life-giving principle," and is so essential to the successful operation of the entire combination of correlated parts that without it the machine is not workable, and that consequently "there can be no infringement of the Parker patent by any machine which does not employ the same principle of action, to wit, the elevator principle." In this I am unable to accept defendant's view, but am satisfied that he greatly magnifies the functional value of that element in its relation to the other features of the combination. As I regard it, this feature of the feed mechanism of plaintiff's device is in no wise essential to its life; nor do the terms of the patent make it so. Any other means of an equivalent nature may be substituted for it and still be within the patent; and from my observation of the operation of the two machines, in the light of the evidence, I am quite satisfied that the substitute means employed in defendant's device is no more than such a change as might readily have been suggested to the mind of any mechanic skilled in the art, with plaintiff's device before him, and that it in no material way effects a change in the principle or mode of operation found in plaintiff's combination.

[2] While changing its form, all defendant has accomplished in substance and effect is the consolidation of two elements of the feeding mechanism into one, but without changing the principle upon which the combinative mechanisms operate. This does not avoid infringement. As stated by the Court of Appeals in the recent case of Dundon v. Pedersen, 220 Fed. 309, 311:

> "Neither the joinder of two elements of a patented combination into one integral part, accomplishing the purpose of both, nor the separation of one integral part into two, which together accomplish substantially what was done by the single element, will avoid a charge of infringement. Bundy Mfg. Co. v. Detroit Time Register Co., 94 Fed. 524, 36 C. C. A. 375; Standard Caster & Wheel Co. v. Caster Socket Co., 113 Fed. 162, 51 C. C. A. 109; H. F. Brammer Mfg. Co. v. Witte Hardware Co., 159 Fed. 726, 728, 86 C. C. A. 202."

[3] It is the idea of means, and not of form, which is determinative of identity of principle. Thus it is said in Lourie Co. v. Lenhart, 130 Fed. 122, 64 C. C. A. 456:

> "A device which is constructed on the same principle, which has the same mode of operation, and which accomplishes the same result as another, by the same means, or by equivalent mechanical means, is the same device, and a claim in a patent of one such device claims and secures the other."

And this is so even if the change works an improvement. Thus in Crown Cork & Seal Co. v. Aluminum Stopper Co., 108 Fed. 866, 48 C. C. A. 72, it is said:

"The court will look through the disguises, however ingenious, to see whether the inventive idea of the original patentee has been appropriated, and whether the defendants' device contains the material features of the patent in suit, and will declare infringement, even when those features have been supplemented and modified to such an extent that the defendant may be entitled to a patent for the improvement."

See, also, Machine Co. v. Murphy, 97 U. S. 120, 24 L. Ed. 935.

As to the minor changes in this part of the feeding mechanism, necessitated by the elimination of the elevator feature, they need not be noticed in detail. It is obvious, I think, from the most casual observation, that they are purely mechanical, involving no change in principle, and are sufficiently covered by what has been said.

2. In the plaintiff's device the side slats are fed into the machine through the action of carrier arms moving horizontally, and which, by the action of engaging clamps, draw the slats into proper position relative to and immediately above the uppermost edges of the end and partition pieces as they rest on the nailing bases, and thereupon the descending nailing heads or chucks contact with and press the arms down sufficiently to deposit the slats upon the ends and partition pieces in final position for nailing. In the defendant's machine, while like reciprocating carrier arms are employed, the slats are deposited in position upon the end and partition pieces by means of what defendant characterizes as "gravity"—that is, without the exertion of pressure from the descending nailing heads—and it is claimed that this difference involves an essential change in the principle of operation of this feature of defendant's device. But an observation of the working of the two machines clearly discloses, I think, that the change is not a material one. While the engaging meechanism for seizing and holding the slats in the process of carrying and depositing them in position differs in minor details, these differences involve no characteristic or essential change in the principle of operation. Through the means employed in defendant's device the slats are no more, in any true sense, deposited by "gravity" than they are by that of the plaintiff. In both the process is essentially and purely mechanical, and the slightly differing means devised by the defendant is very patently the mechanical equivalent of that found in plaintiff's combination.

3. As stated in describing the two machines, both have rotating means for inverting or turning the partially completed box to present the successive faces for receipt and nailing of the slats. The boxes in the one instance being square, and in the other rectangular, it is obvious that to have rotation in either case there must be means provided for clearance of the corners or angles from the adjacent parts of the machine in order that the box may turn. In plaintiff's device, this space is provided by the upward movement of the nailing heads after the process of nailing each set of side pieces is accomplished, thus enabling the arms carrying the revolvable disks or clamps holding the box to rise sufficiently from the nailing bases to give the necessary clearing space for the rotating mechanism to act. In the defendant's device, this space is provided by a rearrangement of the mechanism, which permits the nailing bases to drop sufficiently to af-

ford the necessary clearance for the rotation of the box; this arrangement performing the same office, but in a manner which it is urgently claimed by defendant involves an essentially different principle of operation—the argument being that "it would be impossible in the complainant's machine to utilize the principle of action or mode of operation utilized in this respect by defendant"; that this is due to the organization of the plaintiff's machine, so as "to utilize the elevator"; and that "it would require the total elimination of the elevator and the complete reorganization of the machine to permit the use of defendant's principle of turning the box."

But I am unable to regard this change as involving any essential difference in the principle of operation of defendant's device. It appears to me that what defendant has done in this respect is merely to take the vertically moving elevator feature of plaintiff's feeding mechanism, which he regards as so essential to its life, and adapt it to the rotating means of his device, thus changing its form, but not its substance. I agree with plaintiff that it is not material to the operative principle upon which the two devices work in this regard whether you raise the holding clamps or lower the nailing base. It is a mere choice of mechanical means for accomplishing the same end; that is, providing the space to enable the rotating mechanism to operate. As plaintiff says:

"One is the full mechanical equivalent of the other, performing the same function, and being designed by its manufacturer for the carrying out of the same purpose."

4. There is no substantial merit in the claim that there is any essential difference in the ejecting means employed in the two machines, and they do not call for technical differentiation. In plaintiff's device there is employed appropriate reciprocating means for mechanically ejecting or "kicking out" the completed box. In that of defendant there is likewise employed reciprocating means for this purpose, with the difference that in the latter the incoming end and partition pieces for the succeeding box are utilized as a part of the ejecting means to push out the completed box, whereas in plaintiff's apparatus the mechanism is independent of any such aid. But it is quite obvious to the most casual observation that the one is as much a mechanical means as the other and involves no difference in principle of operation.

There are other differences in the form of construction of the two machines urged upon the attention of the court, but they do not require special notice. None of them are of a character to take them out of the principles above stated or avoid infringement. They are such changes as would readily be suggested to the mind of one seeking to avoid infringement of an existing known conception, and it is not surprising, therefore, to find in the record evidence that prior to the bringing forth of defendant's machine its designer had full opportunity to become acquainted with the construction and operation of the device of the patent.

These considerations lead to the conclusion that defendant's device must be held to infringe the several claims counted upon, since I think it clear that each is capable of being read upon that combination. All

that defendant has done is to seize upon the inventive idea involved in plaintiff's combination and put it forth in changed form, but in no respect changing its principle of operation.

A decree will accordingly be entered in favor of plaintiff as prayed.

BALDWIN (JOHN SIMMONS CO., Intervener) v. ABERCROMBIE & FITCH CO. (JUSTRITE MFG. CO., Intervener).

(District Court, S. D. New York. February 6, 1915.)

PATENTS ⚷328—VALIDITY AND INFRINGEMENT—ACETYLENE GAS-GENERATING LAMP.

The Baldwin reissue patent, No. 13542 (Original No. 821,850), for acetylene gas-generating lamp, claim 4, the principal features of which are that the water tube extends down into the mass of the carbide and within it is a movable rod or stirrer, which controls the flow of water and also is used to break up the slaked carbide which cakes at the delivery end of the tube, was not anticipated, discloses invention, and is not invalid, as broadening the invention of the original patent because the rod is not limited to one having a bent arm; also *held* infringed.

In Equity. Suit by Frederick E. Baldwin (the John Simmons Company, intervener) against the Abercrombie & Fitch Company (the Justrite Manufacturing Company, intervener) for infringement of patent for acetylene gas-generating lamp. On final hearing. Decree for complainants.

James Q. Rice and M. C. Massie, both of New York City, for plaintiffs.

James R. Offield and Charles K. Offield, both of Chicago, Ill., for defendants.

MAYER, District Judge. The original of this reissue (No. 821,850) was before the Circuit Court of Appeals for the Seventh Circuit in Bleser v. Baldwin, 199 Fed. 133, 117 C. C. A. 615, and (inter alia) was held valid, but not infringed. The opinion is dated April 23, 1912, and on February 5, 1913, Baldwin filed his application for a reissue, which was granted on March 11, 1913, only about five weeks thereafter.

This reissue patent was recently considered by Judge Orr in the Western District of Pennsylvania, in Baldwin v. Grier Brothers Company, 215 Fed. 735, and by him held valid. Since the trial of the suit at bar, the Court of Appeals for the Third Circuit has decided the appeal in the Grier Case, and, reversing the court below, has held that the reissue was broadened over the original patent and that "thus construed claim 4 cannot be sustained."

Passing for the moment the question of the validity of the reissue, two courts have decided that what Baldwin did arose to the dignity of invention, and with that conclusion I heartily agree. True, the generation of acetylene gas was old, and acetylene lamps were old, when Baldwin undertook the problem; but "the difficulty in the art," as

---

⚷For other cases see same topic & KEY-NUMBER in all Key-Numbered Digests & Indexes

Judge Orr said, was "to regulate the flow of water to the carbide so that there will not be a greater amount of gas liberated by the chemical action than is required for use."

While Baldwin's invention was intended for use as a lamp for bicycles, automobiles, and miners, its commercial utility has been principally in connection with miner's cap lamps, and therefore we are dealing with a device in which safety and simplicity of construction and operation are controlling considerations. The successful operation of such a lamp depends upon supplying the water continuously at the proper rate. If the water is fed too fast gas will be generated too rapidly, and will blow through the burner, if fed too showly the flame will die down, and if fed not uniformly the flame will be unsteady.

"The method which I have invented," said Baldwin in his specification, "for securing the proper feed under all circumstances without the above objectionable features is to make the bore of the duct of comparatively large size, extend the tube which forms the duct downward so that its end will be always embedded in the carbide and then restrict the duct by means of a wire or rod preferably centrally located therein to leave a channel of the proper size. This arrangement is simple; but in a long experience it has been found to be entirely successful. It is possible to secure the correct drop-by-drop feed with a duct of considerable size, since the friction of the water on the large area of the tube wall and wire reduces its flow. This retarding friction may be regulated by varying the size of wire used. The duct does not become choked, since if foreign particles are deposited therein the water can take a zigzag course around it without the supply being appreciably affected. If it is at any time necessary to clean the tube, the wire is simply reciprocated and rotated a few times from the outside of the lamp without disturbing the position of other parts. This nice regulation of the flow enables me to entirely dispense with the troublesome adjustment of the valve. If a valve is used at all, it is employed to shut off the flow entirely, and not to regulate it. The construction just described is shown in Fig. 1, in which *L* is the water-supply tube, and *N* the constricting wire. In this illustration the size of the parts is of course exaggerated. Fig. 2 shows a similar construction with a valve *M* on the constricting wire *M'* which may be set by turning the screwplug M^2 in the top of the lamp. In some cases, however, there is employed in connection with the means for introducing the water into the mass of carbide a device in the nature of a stirrer, which on proper manipulation may be used to break up the mass of carbide surrounding the outlet of the water duct, and which, by having become slaked and caked by the action of water, prevents the proper percolation of the latter to the unslaked carbide in the receptacle *G*, Fig. 1. As such device I employ a stem or rod *N*, which extends down through the tube *L* and is bent at substantially right angles to form an arm *N'*. This rod may form a prolongation of the valve stem *M'* of Fig. 2, or in case no valve is used may extend from the top of the lamp down through the water reservoir, as shown in Fig. 3."

What Baldwin claimed (in claim 4 here in controversy) was:

"4. In a lamp of the kind described, the combination with a water reservoir, and a receptacle for calcium carbide, of a water tube extending from the former a considerable distance into the latter and adapted to be embedded in the mass of carbide in the receptacle, and a rod extending through the water tube, and constituting a stirrer to break up slaked carbide around the outlet of the water tube, *the rod operating to restrict and thus control the flow of water to the carbide*, as set forth."

The function of the stirrer is described in the specification as follows:

"It will be understood from what has been said that the function of the stirrer is to break up, pierce or disturb the particles of the slaked carbide mass which, when the lamp is in use, forms at the delivery end of the tube. This slaked carbide mass tends to solidify, and either shuts the water off altogether or restricts it, so that less water is delivered from the water tube than the lamp demands for efficient operation. As it is sufficient, under certain circumstances, to insure the requisite water flow by so manipulating the stirrer as to pierce, break up, or loosen the slaked carbide mass immediately around or at the mouth of the tube, it is obvious that the stirrer need not always be formed with a bent end or so as to extend radially from the mouth of the tube."

The underlined parts of the above quotations show what was added in words in the reissue over the original patent.

The most striking characteristic of the Baldwin lamp is its departure from the prior art, in that the water tube, instead of terminating above the carbide or being protected by a screen, is extended down and buried in the carbide mass.

The stirrer is also an important feature, because it obviates the choking apparently invited by burying the end of the water tube in the carbide mass. By making the water restricting and controlling rod movable, and by having its end protrude from the end of the water tube, a device is produced which, properly manipulated, may be used to break up the mass of carbide surrounding the outlet of the water duct. After the lamp has been running for a time the sludge which forms as the carbide is hydrated, packs around the end of the water tube, and prevents "the proper percolation of the water to the unslaked carbide" in the carbide receptacle. The stirrer so disturbs the sludge at the end of the tube that the normal water flow is resumed.

It seems unnecessary to consider at length the prior art patents which were before the courts in the two previous cases, but in this suit over 20 prior art references were introduced, of which 13 (if my count is right) now appear for the first time. Of these, the publication in Dingler's Polytechniches Journal, a German technical journal, is the only one worthy of consideration, and that in connection with the Schmitt British patent, No. 15,688 of 1898, which was in the Grier case.

Any one interested in the discussion of the Handshy (No. 591,132), Marechal (British No. 29,405), or Mosher (No. 644,439) patents may refer to the testimony of plaintiffs' expert, Mr. Proctor, whose views, as to these patents, I fully accept.

In the Schmitt British patent no disclosure is made of the tube embedded in the carbide, nor is there shown a restricting rod or a stirrer such as in the Baldwin patent and commercial structure.

In the Dingler publication, the disclosure is of an acetylene lamp of the drip tube with a water-controlling valve and a screen tube to keep the carbide away from the end of the drip tube—in other words, Schmitt's theory was almost the opposite of Baldwin's.

Curiously, Mr. Proctor came into possession of a bicycle lamp (Exhibit 15) of whose authenticity I am entirely satisfied, which seems to embody the Schmitt invention. One need but examine this physical structure to realize the greater simplicity and efficiency of the Bald-

win device, and to conclude that Baldwin accomplished a highly meritorious result.

As has been said more than once, often the prior art shows how little has been contributed by a claimed invention, but quite as often it discloses how much the last man, by, perhaps, only some little change or addition or omission of an element, has advanced; and while the patent in suit is far from a pioneer, the Baldwin lamp has practically been a pioneer commercially of miner's acetylene cap lamps, and deservedly so.

Doubtless the manufacturers of carbide, in order to sell their product, have helped in every way they could to introduce a carbide-consuming device in order to displace candles and oil lamps; but that effort alone was not enough to accomplish the sale of over 1,000,000 of these lamps in less than eight years—a result achieved only after overcoming the prejudice of the miners and the opposition of public officials in some quarters.

But Baldwin, like many a meritorious inventor, has had his troubles. By the construction given to the claim in the Bleser suit, it would seem that claim 4, as then phrased, might be construed as covering any rod in the water tube to be embedded in the carbide which would act as a stirrer, and as not limited to a water restricting and controlling rod also constituting a stirrer. Under such circumstances it is not easy to determine what to do. Shall a reissue be applied for, or shall an attempt be made to secure a different result in a different circuit, in the hope thereby of reaching the Supreme Court?

Baldwin decided to apply for a reissue, and now the reissue is attacked as broadening the invention, and as failing in every respect to come within the remedial purposes of the reissue statute. Reissues often present troublesome questions, but the ultimate test, I think, is good faith. The extremes of obtaining what is justly due on the one hand and endeavoring to lasso the art on the other are illustrated in Motion Picture Patents Co. v. Laemmle et al., 214 Fed. 787, and National Casket Co. v. Stolts, 197 Fed. 940, affirmed 204 Fed. 963, 123 C. C. A. 305.

In the suit at bar, I am satisfied that the Patent Office was right when it promptly allowed a reissue. Let me follow the history of the patent and its commercial exploitation.

The application for the original patent, No. 821,580, was filed July 15, 1903, but was not granted until May 22, 1906. About July, 1903, Baldwin manufactured a large gang lamp (holding about three pounds of carbide) by means of which several men could work. This lamp had the bent arm or stirrer as it is called. As early as December, 1905, however, the miner's cap lamp was made, and early in 1906 it was put on the market, and in this was the straight rod, which, among other things, has characterized the commercial lamp ever since. Thus, even before the grant, Baldwin had exemplified practically, in an actual device which went extensively into use, the precise combination which is now before us. The straight rod idea was thus not after-acquired from some other source, but was an alternative form, applicable to a

small lamp in which the area of agitation was much smaller than that of a gang lamp.

Between 1906 and 1909, when the suit of Baldwin v. Bleser was begun, there was no occasion for Baldwin to bother himself about the patent. He had the right to rely upon what the government had given him, and so far as the evidence discloses nobody questioned the validity of the patent. In April, 1911, the Circuit Court in Baldwin v. Bleser entered its decree holding the patent valid and infringed, and certainly, while that decree stood, there was no occasion for Baldwin to apply for a reissue. Shortly after this, to wit, in July, 1911, defendant Justrite Company sold its first alleged infringing lamps, but there is no testimony showing that knowledge of such sale came to plaintiffs. On April 23, 1912, the Circuit Court of Appeals handed down in Bleser v. Baldwin, and then for the first time the problem of what to do was presented to Baldwin.

It is urged that the construction of the original patent limits the stirrer element to a bent arm, and that to construe it as including a straight rod would be to broaden by reissue. But the testimony is convincing that the straight stirrer and the bent stirrer function exactly the same. One is suitable for a small area of carbide, and the other for a large area. They both stir, and I confess myself unable to see how a stirrer is not a stirrer.

As is well understood, claims are drawn to protect, if possible, against ingenious attempts at infringement, and so we usually see one claim in a series broader or narrower than another. If Baldwin meant to restrict himself to a bent stirrer, why the qualifying words (underscored) in claim 2 and not in claim 4?

"2. In a lamp of the kind described, the combination, with a water reservoir and a receptacle for calcium carbide, of a tube extending from the former into the latter so as to be embedded in the mass of carbide contained in the receptacle, a rod extending from a point outside of the lamp through the tube and into the carbide-chamber and *having its end bent to form a stirrer for breaking up the slaked carbide around the outlet of the water tube*, as set forth."

"4. In a lamp of the kind described, the combination, with a water reservoir and a receptacle for calcium carbide of a water tube extending from the former a considerable distance into the latter and adapted to be embedded in the mass of carbide in the receptacle, and a rod extending through the water tube and constituting a stirrer to break up slaked carbide around the outlet of the water tube, as set forth."

I am not unmindful of the fact that the drawings and description refer to a bent rod or arm, but the real test, in such situations, was laid down as early as in Winans v. Denmead, 15 How. 330, 14 L. Ed. 717, and has often been applied. See Hutter v. De Q. Bottle Stopper Co., 128 Fed. 283, 62 C. C. A. 652, as expressing the views of this circuit.

I see nothing in the language added in the reissue to the original specification to warrant the conclusion that the patent was thereby broadened as to this point. The breaking up or stirring function is more fully described in words but no functional change is described. Possibly "pierce" might have been left out, but that, as a matter of words, is de minimis in this case.

On this "bent" and "straight rod" question, I am firmly convinced that the reissue is valid, and that the claim must be construed as includ-

ing a straight rod and as so construed is not a departure from the original patent. I fully realize that this puts me in disagreement with the Court of Appeals for the Third Circuit—a result which I would have preferred otherwise, for, in addition to the desirability of comity, I appreciate the experience and the high standing of that court. Yet I cannot escape the responsibility defined by Mr. Justice Brown in Mast, Foos & Co. v. Stover Co., 177 U. S. at page 488, 20 Sup. Ct. 708, 44 L. Ed. 856. The conclusion which I have stated was arrived at prior to my knowledge of the opinion in the Grier Case, and, after careful consideration, I am unable to change my views.

There is, however, a further question. Mr. Offield, for defendants, urged with much force and ability that defendants' construction embodied all of the elements of the original and abandoned claim 6 of the file wrapper, and that reissue claim 4 cannot be extended to embrace subject-matter subsequently disclaimed and abandoned in original claim 6.

The new part of claim 4, added by the reissue, describes the operation of the rod as follows:

"The rod operating to restrict and thus control the flow of water to the carbide."

The original claims, Nos. 1 and 6, in the file wrapper, were canceled. Canceled claim 1 did not include a stirrer. As a stirrer was an element of claim 4 of the original patent as finally allowed, and is an element of the same claim of the reissue, it is clear that there is no question of estoppel interjected into the consideration of the effect of this canceled claim 1 of the file wrapper.

Original claim 6 included a water tube and a restricting rod, and was set forth as follows:

"5. In a lamp of the kind described, the combination, with a water reservoir and a receptacle for calcium carbide, of a tube extending from the former into the latter so as to be embedded in the mass of carbide contained in the receptacle, a rod extending from a point outside the lamp, through the tube into the carbide receptacle, restricting the tube to permit only a predetermined quantity and rate of flow of water into the carbide, and a valve to cut off the supply of water to the receptacle, as set forth."

It will be noted that this language is broad; that it does not describe in words a stirrer; that it also includes a valve, which is an element not included in either claim 4 of the original patent or claim 4 of the reissue, and which, in my opinion, is a mere addendum, not playing any part in the action of the device or the combination which constitutes the invention. It is true that Exhibit B of the file wrapper shows a straight rod going through the water tube and embedded in the carbide receptacle; but it is equally true that what the inventor and the Patent Office examiner were skirmishing about was a matter of phraseology. Had the situation ended there, the cancellation of claim 6 might possibly have been construed as an estoppel; but the significant and controlling fact in the history of this file wrapper is that, after claim 6 was canceled, claim 4 of the original patent was allowed. That claim clearly described the rod as constituting a stirrer. Further, claim 6 was rejected on the Baldwin patent, No. 656,874, the

Peck patent, No. 662,105, the Van Praag patent, No. 705,166, and the Schmitt British patent, No. 15,688. The study of those patents as explained in the testimony of Mr. Proctor, and as I have outlined supra in part, will demonstrate that as prior art references they were a good distance behind what Baldwin was trying to show to the Patent Office was his invention.

The file wrapper satisfies me that the examiner originally allowed claims containing the stirrer which now constitute claims 1, 2, and 3 of the patent, and that, after claim 6 was canceled, he allowed a claim (to wit, claim 4) broader than claim 6 in that it omitted the valve, and narrower than claim 6 in that it definitely included the stirrer. I fully agree with plaintiffs that if defendants' lamp, aside from the fact that it includes a valve, had a water restricting rod which did not constitute a stirrer, and if the patent had been reissued to cover a combination which was otherwise like claim 4, but did not include a stirrer, it could be successfully urged that the reissue should not be sustained against such a lamp.

The file wrapper history in my opinion comes down to this: That in a battle for words the inventor never gave up his struggle for the invention, but landed on language which later the courts construed as being too broad to be limited to a rod operating to restrict and control the flow of water to the carbide. The file wrapper is not to be overlooked, and is often highly important to prevent expansion or the effort to reclaim abandoned territory; but, as was pointed out by Judge Noyes in Westinghouse v. Condit Elec. Mfg. Co., 194 Fed. 427, at page 430, 114 C. C. A. 389, the bearing of the file wrapper on the language of the grant is not to be exaggerated.

Concluding, therefore, that the reissue is valid, I think that there is not any substantial question of infringement. The Justrite lamp has a valve which simply adds something which may be a good feature, by which in no way changes the function or differentiates the results of the combination of the patent.

Finally, it is urged that the Justrite Company should be relieved because of intervening rights which it has acquired. It will be remembered that this company entered the field with its lamp at a time when the validity and scope of the Baldwin patent were still unquestioned, and when, after some five years of capable effort, the Baldwin lamp had created an extensive market. The Justrite Company took its chances, and, in view of the necessities of the situation, it is relieved of all accountability for the period prior to the granting of the reissue patent; but when the reissue was granted the Justrite Company again took its chances.

By the reissuance of the patent, the patentee loses all in the way of an accounting under the original patent, but the dominant purpose of the reissue statute was to save to the inventor the future remaining after reissue. I see nothing in the course of plaintiffs or defendants which would allow a court of equity to conclude that defendants are to be relieved because of intervening rights.

Finally, I may say that, in the light of the decision of the Circuit Court of Appeals in the Bleser Case, the original specification turned

out to be insufficient, and claim 4 turned out to be broader than was originally supposed. The error thus made arose by reason of that inadvertence against which the statute was designed to protect. Motion Picture Patents Co. v. Laemmle, 214 Fed. 787. It has happened that I have had occasion to examine a number of reissue patents, and no case has appealed to me more strongly than the case at bar as one in which the inventor was justly entitled to the reissue.

The plaintiffs may have the usual decree; but, as it is desirable not to create an embarrassing trade situation pending appeal, the injunction will be suspended pending appeal. If an appeal is not promptly taken, plaintiffs may apply for a modification of the suspension.

Settle decree on seven days' notice.

SINGER v. LAMONT, CORLISS & CO.

(District Court, S. D. New York. December 29, 1914.)

PATENTS ⟹328—VALIDITY AND INFRINGEMENT—COMBINED CARTON AND DISPLAY DEVICE.

The Singer patent, No. 880,410, for a combined carton and display device, *held* not anticipated, valid, and infringed.

In Equity. Suit by Joseph B. Singer against Lamont, Corliss & Co., a corporation, for infringement of claims 2, 3, and 4 of letters patent No. 880,410 for a combined carton and display device, granted to complainant February 25, 1908. On final hearing. Decree for complainant.

C. P. Goepel, of New York City, for complainant.

Clarence G. Galston, of New York City, for defendant.

MAYER, District Judge. In the manufacture of paper folding boxes, the practical men and the inventors seem to have worked along two general lines, somewhat different, although by the nature of the art necessarily also closely related. One line has to do with the manufacture of durable, well-made packages, whose sole purpose is to contain contents, while the other has to do with packages, which shall not only be efficient as containers, but which also will display the contents to the best advantage, and, by appropriate words or illustration, attract the attention of the customer.

Singer, who seems to have spent his business life in the printing and folding box business, was a salesman in the employ of the Nevins-Church Press when he made the invention in suit. In 1906 an official of one of the concerns which was a customer of Singer's employer told Singer that a more satisfactory display box was needed than Singer was then selling, and, after consultation with his principal, Singer undertook the effort of creating an improved form of box which should have the combined advantages of efficiency as a container and adaptability as a display medium.

Singer filed his application on November 13, 1906, and letters pat-

---

⟹For other cases see same topic & KEY-NUMBER in all Key-Numbered Digests & Indexes

ent were issued to him on February 25, 1908. In 1909 and 1910 Singer was in the employ of the Lord Baltimore Press, the acknowledged real defendant in this suit, and during those years, and up to July, 1911, the Lord Baltimore Press paid Singer royalties under the license which he had granted to them. The defendant's box is a clear infringement, and that the Lord Baltimore Press realized the commercial value of the Singer device is demonstrated by its manufacture thereof since 1911.

This seemingly simple device has become from the start a marked commercial success, and Singer has now branched out as a manufacturer. Beginning with the sale of about 105,000 boxes for the two years 1906 and 1907, the Singer box attained an aggregate output of about 1,000,000 boxes for the years 1910 and 1911, and since then the sales have run to something over 400,000 boxes each year.

The reason for this success is apparent from an inspection of the commercial box, which, for its purposes, is clearly superior to any of its predecessors, and such is doubtless the opinion of the Lord Baltimore Press, as is evidenced by its conduct. Such must also be the view of the imposing array of merchants of small wares, from chocolates to shaving brushes, for whom Singer makes these boxes, and whose names and products have become familiar to us, when, after a weary day, we read the signs in the cars or watch the changing electric lighted figures on the roofs of the illuminated pathway.

What Singer did seems simple enough now. "My invention," he said, "has for its object a combined carton and display device, which may be used to contain packages of goods for shipment, and which may also be used on the counter by the retailer to display the goods attractively. To this end, it is desirable that the combined carton and display device be sufficiently strong to permit the safe handling of the carton and its contents, even though the weight be considerable; also that the carton will, when opened, present an attractive appearance, with considerable space for the reception of printing, pictures, or advertising matter. It is also desirable that this advertising matter be so located on the carton as to be protected from injury in transit or by handling. My improved carton meets these requirements, and also is so constructed that all the display printing comes on one side of the blank from which the carton is constructed. This permits stock which is finished on one side only to be used, and also saves printing on more than one side."

The claims here in controversy are:

"2. The improved carton and display device comprising a body having folded ends, a back display surface hinged to said body, a front display surface of the same size as the front wall of the carton and hinged to the upper edge of the said front wall, and wings attached to the said front display surface and adapted to be inserted between the contents of the carton and the ends thereof when the carton is folded and between the folded portions of the ends when the box is closed.

"3. The improved carton and display device provided with a front display surface hinged to the top edge of the front of the box and a tongue on the end of the said front display surface to hold the front display surface when in closed position by passing between the end of the box and the contents thereof, and to hold the said display surface parallel with the front wall of the box

when in open position by passing between the layers of cardboard composing the end of the box.

"4. The improved carton and display device provided with a back display surface having a bracket hinged thereto, and with a front display surface having hinged thereto a tongue, the said bracket and the said tongue being adapted to pass between the end of the box and the contents thereof to maintain the back display surface and the front display surface in closed position."

Briefly stated, the characteristics of the Singer box are that it can be readily, neatly, and securely folded so as to protect its contents, and, when open, it displays in convenient position a front and back display surface. By one printing operation, which necessitates glaze (if desired) on only one side, the expense which would attach to printing by two operations is manifestly lessened.

The folding box with display surface had its first commercial demonstration, so far as the testimony discloses, in the Thayer box, designed by John F. Carver, of that firm, in 1901, and placed on the market early in January, 1902. Some doubt is suggested as to the accuracy of Carver's recollection, because of a difference claimed to exist between the wings of the back surface in the illustration in the catalogue produced by Carver; but I shall take Carver's testimony as he gave it. The Carver or Thayer box, however, requires two printing operations, does not close tightly, and has not the adaptable front surface of the Singer, and, in addition, has a rigid rim over the blank space.

A Swiss patent issued to Seifenfabrik Helvetia and Alphonse Joseph Charpy, dated October 4, 1901, if construed as contended by defendant, is probably the nearest reference; but this patent lacks the element of the tongue or wings on the front display surface adapted to pass between the end of the box and its contents to hold the surface closed. Nothing is suggested in this patent as to a display surface, and, concededly, printing on the Swiss box could not be done in one operation.

In the Webb patent, United States letters No. 642,182, dated January 30, 1900, at least the same criticism may be made. In the Wilcox patent, United States letters No. 615,417, dated December 6, 1898, while the six *outward* faces could be printed on in one operation, the wings are missing, as in the Swiss patent.

The Davis patent, for oyster or berry pails, United States letters No. 692,990, dated February 11, 1902, had for its special object the forming of "a very close and tight-fitting top for the pail, to prevent the contents from leaking or spilling out," and is, in a sense, a complicated structure for so simple an art, and this because strength and tight fit were the sole objects in the mind of the inventor.

Of course, as has often been pointed out, the addition or omission of an element in a combination is often the best evidence of invention, and has frequently been the test of a high order of invention. In a seemingly easy art of this kind, it is now and then the slight change which counts, and which is the reason for the commercial success over prior paper patents or theoretical accomplishment.

The question of invention is close; but, interpreting the prior art in its most favorable light for defendant, Singer combined the little odds and ends, until he made an ingenious structure, which promptly became

a commercial success, because its advantages were plain to the shrewd up-to-date men, who use boxes of this general character for their merchandise.

Some emphasis is placed by defendant on the use of the word "parallel" in claim 3, when considered in its accurate geometrical sense; but patentees have troubles enough with words without whittling too much, and the position of the display surface when the box is open is "parallel" with the front wall for the purposes of the claim.

It will be understood, of course, that I am not passing on the scope of the claims, for I am not troubled by any question of infringement. What I do decide is that the claims are valid.

I may say, in conclusion, that the fair and brief fashion in which the suit was tried, within the limits of its real issues, together with the helpful illustrations of the two capable young experts, furnished an apt example of the advantage, in time and expense, of open court hearings in controversies as to simple constructions.

Complainant may have the usual decree.

WESTERN UNION TELEGRAPH CO. v. ATLANTA & W. P. R. CO.

(District Court, N. D. Georgia. September 30, 1915.)

No. 66.

1. TELEGRAPHS AND TELEPHONES ⟹11—RIGHT OF WAY—CONSTRUCTION OF CONTRACT WITH RAILROAD COMPANY.

Complainant telegraph company, which with its predecessors had for many years maintained its lines over the right of way of defendant railroad company, entered into a new contract with it for a term of seven years, and after that until terminated by a year's notice. By one clause of the contract complainant was granted and assured a right of way over defendant's line, to be exclusive so far as defendant could legally make it so, with the right to put up additional wires, etc. *Held* that, whatever right of occupancy complainant previously had, such contract, voluntarily entered into, measured its future right, which ended when the contract was terminated in accordance with its terms.

[Ed. Note.—For other cases, see Telegraphs and Telephones, Cent. Dig. § 7; Dec. Dig. ⟹11.]

2. EMINENT DOMAIN ⟹10—TELEGRAPH COMPANIES—RIGHT OF WAY—CONSTRUCTION OF FEDERAL STATUTE.

Rev. St. § 5263 et seq. (Comp. St. 1913, § 10072 et seq.) giving telegraph companies which accept its provisions the right to construct and operate their lines over the public lands and over any military or post road of the United States, does not vest such a company with any power of eminent domain, nor confer upon it the right to construct its lines over private property, or the right of way of any railroad company, without consent of the owner.

[Ed. Note.—For other cases, see Eminent Domain, Cent. Dig. §§ 35–48; Dec. Dig. ⟹10.]

In Equity. Suit by the Western Union Telegraph Company against the Atlanta & West Point Railroad Company. On motion to dismiss bill. Motion granted.

⟹For other cases see same topic & KEY-NUMBER in all Key-Numbered Digests & Indexes

Wm. L. Clay, of Savannah, Ga., for plaintiff.

R. E. Steiner, of Montgomery, Ala., and Sanders McDaniel, of Atlanta, Ga., for defendant.

NEWMAN, District Judge. This is a bill filed by the Western Union Telegraph Company, hereafter called the Telegraph Company, a corporation created and existing under the laws of the state of New York and a citizen and resident of that state, against the Atlanta & West Point Railroad Company, hereafter called the Railroad Company, a corporation created and existing under the laws of the state of Georgia and a citizen and resident of the Northern district of Georgia, to enjoin the Railroad Company from removing the Telegraph Company, its wires, poles, telegraph instruments, etc., from and off of the right of way of the Railroad Company.

It appears from the bill that the Telegraph Company has occupied the right of way of the Railroad Company with its poles and wires, and the offices of the Railroad Company with its instruments and appliances necessary for the transmission of messages, for many years. According to the bill the origin of this situation between the parties is somewhat doubtful, except that it is definitely alleged that the Telegraph Company and its predecessors have had their lines along the right of way of the defendant Railroad Company for a long period of time.

It is alleged on information and belief that between the years 1850 and 1860, or prior thereto, the Atlanta & West Point Railroad Company permitting and not objecting thereto, the American Telegraph Company, or the Washington & New Orleans Telegraph Company, or some other telegraph company, established and maintained a line of telegraph wires along the right of way of the defendant Railroad Company, and that it then became a component and important permanent part or link of the plaintiff's telegraph system in the state of Georgia and other states, which line, it is alleged, was intended to be and is of unlimited duration and existence, and that the telegraph line was operated upon and along the Railroad Company's right of way.

It is then alleged that during the year 1861, or thereabouts, the American Telegraph Company, the Washington & New Orleans Telegraph Company, and other telegraph companies having and operating telegraph lines in Georgia and other states which had seceded from the Union, confederated, and a new telegraph company, which was called the Confederate Telegraph Company, took over, acquired, operated, and became seised and possessed of the telegraph lines along the right of way of the defendant Railroad Company, and that they became a part of the system of the Confederate Telegraph Company, operating throughout the Southern States, and as a common carrier transmitted messages over its lines until 1865, when the line or lines were acquired, taken over, and operated by the American Telegraph Company.

It is then alleged that during the year 1865 the Confederate Telegraph Company conveyed and assigned to the American Telegraph Company all its lines and telegraphing property in the state of Georgia

and other states, including its lines upon the right of way of the defendant Railroad Company, and that the American Telegraph Company, which, it is alleged, acquired thereby a perpetual, irrevocable, and assignable easement or right to construct, maintain, and operate the same, operated said lines until 1866, when the American Telegraph Company transferred and conveyed its lines and property, including the line or lines constructed and operated along the defendant's right of way, and said easements, to the plaintiff, the Western Union Telegraph Company.

A company called the Southern Telegraph Company, in 1884, according to the allegations of the bill, constructed and operated a telegraph line along the defendant's right of way, and this company, on a proceeding in the United States Circuit Court of Virginia, went into the hands of receivers. It had issued bonds for a large amount, and, having defaulted in interest, there was a foreclosure of the mortgage. There was, according to the bill, an ancillary proceeding in the United States Circuit Court for the Northern District of Georgia, at Atlanta, in which a decree, previously entered in Virginia, was entered and confirmed, foreclosing the mortgage and appointing commissioners to sell; that there was a sale by commissioners duly appointed, the sale embracing extensive telegraph lines in the Southern States, including its lines on the right of way of the Atlanta & West Point Railroad Company. The Farmers' Loan & Trust Company, pursuant to the decree, joined with the commissioners in the conveyance of the property, which, at its sale, was bought by the New York & Southern Telegraph Company, a corporation of New York, which company, in August, 1888, conveyed the same to the plaintiff, the Western Union Telegraph Company. It is alleged that the receivers of the Southern Telegraph Company operated the lines of that company during the receivership.

The plaintiff Telegraph Company seems to have occupied the telegraph lines then acquired by it over and along the right of way of the defendant Railroad Company until the year 1891, when an agreement was entered into between the Telegraph Company and the Western Railway of Alabama and the Atlanta & West Point Railroad Company, jointly and severally. It is recited in the beginning of the agreement that:

"The Railroad Companies own or control and operate a continuous line of railroad from Atlanta, Georgia, to Selma, Alabama, along which railroad the Telegraph Company owns lines of telegraph poles and wires, which are now operated by the Telegraph Company under the agreement hereinafter mentioned; and whereas, it is desirable in the interest of both parties hereto that a new agreement shall be entered into between them providing for their enlarged wants," etc.

This contract is of some length, and has provisions concerning the construction and operation of lines of telegraph and the respective rights and duties of the parties with reference thereto, and contains nothing very material to the decision of this case until we come to the sixth paragraph or clause of the agreement. That is as follows:

"The Railroad Companies, so far as they legally may, hereby grant and agree to assure to the Telegraph Company the exclusive right of way on, along, and

under the lines, lands, and bridges, and on both sides of the tracks, of the railroads now or hereafter covered by this agreement, and any extensions and branches thereof, for the construction, maintenance, operation, and use of lines of poles and wires, and underground or other lines for commercial or public use or business, with the right to put up or construct, or cause to be put up or constructed, from time to time, such additional wires and such additional lines of poles and wires and underground or other lines as the Telegraph Company may deem expedient, and which may not in any way interfere with, impede, or hinder the operation of the Railroad Companies; and the Railroad Companies agree to clear and keep clear said right of way of all trees, undergrowth, and other obstructions to the construction and maintenance of lines and wires provided for herein, and the Railroad Companies will not transport men or material for the construction, maintenance, or operation of a line of poles and wire or wires or underground or other lines in competition with the lines of the Telegraph Company, party hereto, except at and for the Railroad Companies' regular rates, nor will they furnish for any competing line any facilities or assistance that they may lawfully withhold, nor stop their trains nor distribute material therefor at other than regular stations: *Provided, always, that in protecting and defending* the exclusive grants conveyed by this contract the Telegraph Company may use and proceed in the name of the Railroad Companies, or any of the companies controlled by them, but shall indemnify and save harmless the Railroad Companies and said companies controlled by them, from any and all damages, costs, charges, and legal expenses incurred therein or thereby."

They then provided in the twelfth paragraph or section of the contract as follows:

"The provisions of this agreement shall supersede the following agreements from and after the date hereinafter written, upon which this agreement takes effect, to wit: (1) Agreement dated November 16, 1865, between the Atlanta & West Point Railroad Company and the American Telegraph Company. (2) Agreement dated March 6, 1866, between the Montgomery & West Point Railroad Company and the American Telegraph Company, and any other agreements between the parties hereto or their predecessors, respectively, in the ownership or control of their respective properties."

Then in the thirteenth paragraph or section is this stipulation:

"The provisions of this agreement shall be and continue in force for and during the term of ten (10) years from the 1st day of February, 1891, and shall continue after the close of said term until the expiration of one (1) year after written notice shall have been given after the close of said term by either party to the other of an intention to terminate the same, and in case of any disagreement concerning the true intent and meaning of any of said provisions, the subject of such difference shall be referred to three arbitrators, one to be chosen by each party hereto and the third by the two others chosen, and the decision of such arbitrators or of a majority thereof shall be final and conclusive."

On January 26, 1902, the plaintiff Telegraph Company and the defendant Railroad Company and the Western Railway of Alabama, the two latter jointly and severally, entered into a contract which commences as follows:

"Whereas, the Railroad Companies own or control and operate a continuous line of railroad between Atlanta, Ga., and Selma, Ala., along which railroad the Telegraph Company owns lines of telegraph poles and wires which are now operated by the Telegraph Company under an agreement between the parties hereto, dated the seventeenth (17th) day of January, 1891, the original term of which has expired, and it is desirable in the interest of both parties hereto that a new agreement be entered into between them."

The contract then proceeds very much like the contract of 1891 until it comes to the sixth paragraph of the agreement again, and that paragraph is as follows:

"The Railroad Companies, so far as they legally may, hereby grant and agree to assure to the Telegraph Company the exclusive right of way, on, along, and under the line, lands, and bridges on both sides of the tracks of the railroads now or hereafter covered by this agreement, and any extensions and branches thereof, for the construction, maintenance, operation, and use of lines of poles and wires, and underground or other lines for commercial or public telegraphic and telephonic uses or business, with the right to put up or construct, or cause to be put up or constructed, from time to time, such additional wires and such additional lines of poles and wires and underground or other lines, and to license the use of its poles for such wires, as the Telegraph Company may deem expedient and which may not in any way interfere with, impede, or hinder the operation of the Railroad Companies; and the Railroad Companies agree to clear and keep clear said right of way of all trees, undergrowth, and other obstructions to the construction and maintenance of lines and wires provided for herein, and the Railroad Companies will not transport men or material for the construction, maintenance, or operation of a line of poles and wire or wires or underground or other lines in competition with the lines of the Telegraph Company, party hereto, except and for the Railroad Companies' regular rates, nor will they furnish for any competing line any facilities or assistance that they may lawfully withhold, nor stop their trains nor distribute material therefor at other than regular stations: Provided, always, that in protecting and defending the exclusive grants conveyed by this contract the Telegraph Company may use and proceed in the name of the Railroad Companies, or any of the companies controlled by them, but shall indemnify and save harmless the Railroad Companies and said companies controlled by them, from any and all damages, costs, charges, and legal expenses incurred therein or thereby."

In the twelfth paragraph of this agreement it is provided that:

"The provisions of this agreement shall supersede said agreement hereinbefore mentioned, dated the 17th day of January, 1891, between the parties hereto, and any other agreements between the parties hereto or their predecessors respectively in the ownership or control of their respective properties."

And in the thirteenth paragraph it is provided that:

"The provisions of this agreement shall be and continue in force for and during the term of seven (7) years from the 1st day of February, 1902, and shall continue after the close of said term until the expiration of one (1) year after written notice shall be given after the close of said term by either party to the other of any intention to terminate the same, and in case of any disagreement concerning the true intent and meaning of any of said provisions, the subject of such difference shall be referred to three arbitrators, one to be chosen by each party hereto and the third by the two others chosen, and the decision of such arbitrators or a majority thereof shall be final and conclusive."

The eleventh paragraph of the plaintiff's bill is as follows:

"Your orator and its predecessors in title and estate, for more than twenty (20) years prior to the filing of this its bill of complaint, have been continuously seised and possessed, and have continuously constructed, maintained, and operated, lines of telegraph along the railroad of the defendant and extending continuously from the northern to the southern termini of defendant's said railroad, one of said lines of telegraph being situate on the eastern side of the tracks of defendant or on the left-hand side of those tracks going south, the other line being situate on the western side of the tracks of defendant or on the right-hand side of those tracks south; and your orator and its predeces-

sors in title and estate have for more than twenty (20) years been continuously seised and possessed of, and your ortator is now seised and possessed of, a perpetual, irrevocable, assignable easement or right to construct, reconstruct, maintain, and operate its said line of telegraph along defendant's line of railroad.

"Your orator's said lines of telegraph, and its said offices and each of them, as now existing, and the present location of said lines of telegraph, and each of them, are hereafter more fully described.

"The said lines of telegraph as they exist at present are substantially the same as the telegraph lines originally constructed, and the location of each telegraph line is substantially the same as the original location occupied at time of original construction.

"The said lines of telegraph, and each of them, were originally constructed, and have since been continuously reconstructed, operated, and maintained, by your orator and its predecessors in title and estate at great cost and expense to your orator and its said predecessors, for the purpose of forming a part of their respective systems of telegraph and a component part thereof, and a necessary connecting link therein, to enable your orator and its predecessors to fulfill the purpose for which they were respectively organized and incorporated, to transmit messages over said lines, and each of them, for the public, and, since the acceptance by your orator of the provisions of the above-mentioned act of Congress of the United States dated June 24, 1866, to transmit messages as therein provided and required, and to transmit telegrams over said lines pertinent to the maintenance and operation of the telegraph lines and business of your orator and its predecessors in title; and said telegraph lines have been continuously so used by your orator and its predecessors from the time of the original construction of said lines, and each of them, to the present time, all of which was well known to all persons, including defendant, owning and having any interest, easement, or right in, to, or upon the land upon and over which said lines of telegraph were originally constructed, and have been and now are maintained, and operated; yet the said defendant did not during all of said time, until as hereinafter mentioned within the last few months, object to the construction, reconstruction, maintenance, and operation of said telegraph lines, but, on the contrary, assented thereto with the knowledge that said lines of telegraph, and each of them, so constructed and maintained, would become a permanent part of the telegraph system of your orator and of its predecessors in title and that said systems of telegraph, and each of them, were to be of permanent and perpetual duration; nor has any person other than defendant owning or having any interest in the land upon which your orator's said telegraph lines have been and are constructed and maintained ever objected to the construction, reconstruction, maintenance, and operation thereof, but have either assented thereto and permitted the same, or are by their silence and failure to object now estopped from objecting thereto."

There are other paragraphs making substantially, but in different ways, the same allegation. It is alleged in various ways that the plaintiff, since the year 1866, when it, the plaintiff corporation, acquired the rights claimed, has continuously constructed, reconstructed, maintained, and operated its lines along the defendant's right of way, without substantially changing the location thereof upon or along said right of way, so that the location of said telegraph lines, poles, superstructures, supports, wires, fixtures, and attachments occupy to-day substantially the same location on or along said right of way as they occupied at the time the telegraph company took possession thereof. In substance the plaintiff alleges that, notwithstanding the contracts made and entered into between it and the defendant company, it has had all along and still has a right in and to the occupancy of the right of way of the defendant company with its poles; that it not merely

owned its poles, wires, etc., but that it has and owns an easement in the right of way which it has so long occupied. The Telegraph Company claims that the contracts between it and the defendant Railroad Company were mere working agreements, and did not, by their terms, fix a period, or attempt to do so, when the right to occupy the right of way with its poles, wires, etc., should cease. It alleges, also, that the attitude, demand, and purpose of the defendant Railroad Company have placed a cloud upon its rights and title in and to the easement which it claims upon and along the defendant's right of way, and constitute a menace to the operation of its telegraph lines on the defendant's right of way and property and its ability to serve the public and the government as a common carrier.

The plaintiff then claims that it acquired certain rights under the act of Congress approved July 24, 1866 (14 Stat. 221, Rev. St. § 5263 et seq.). This act of 1866, the provisions of which it accepted in writing June 5, 1867, is claimed to be the basis for certain federal rights growing out of it. Its claim in this respect, the Telegraph Company says, constitutes a controversy under the Constitution and laws of the United States, upon the determination of the validity and construction of which the result of this case may depend. The matter for determination in respect to this statute of 1866 is stated in this way:

"(a) What is the true construction, force, and effect of title 65 of the Revised Statutes of the United States? What right, title, or interest was thereby given, was possessed during the time hereinbefore mentioned, and is now possessed, by the United States in your orator's telegraph lines, property, effects, and easements upon or along defendant's right of way?

"(b) What was the effect of the contracts entered into between your orator and defendant, dated January 17, 1891, and March 26, 1902, hereinbefore mentioned, and how must those contracts be construed in connection with title 65 of the Revised Statutes of the United States?

"(c) And is not the defendant, by virtue of the said law of the United States embodied in title 65 of the Revised Statutes, prevented from removing, damaging, impairing, or interfering with your orator's telegraph lines, property, and effects upon or along defendant's right of way, and with the construction, maintenance, and operation of said lines, or from interfering with the operation by your orator of its said telegraph lines upon or along defendant's right of way?

"(d) And is not your orator by the same law required and compelled to maintain and operate its said lines of telegraph upon or along defendant's right of way?"

The allegations in reference to the injury which the plaintiff apprehends, necessitating its applying for an injunction, are as follows:

"On the 2d day of July, 1913, the said Atlanta & West Point Railroad Company and the Western Railway of Alabama notified your orator that they and each of them desired to cancel the last-named working agreement dated March 26, 1902. Thereafter your orator notified the said defendant that, possessing an irrevocable, assignable, perpetual easement or right to maintain and operate its said lines of telegraph upon and along the defendant's right of way, which easement would continue to exist after the expiration of said working contract, it would continue to maintain and operate its said lines of telegraph upon or along its said right of way, and offered to enter into a new contract with defendant for reciprocal service if the defendant desired, and if satisfactory terms could be agreed upon. Thereafter negotiations for a new contract were entered upon, but your orator and the defendant have

been unable to agree upon terms for a new working agreement. The defendant has notified your orator that it denies that your orator has a perpetual, irrevocable, assignable easement and right to maintain and operate its telegraph lines upon or along its right of way, and denies that it will be under any obligation to perform any service for your orator, declines to perform any service for your orator after the termination of the present contract, which, by mutual agreement, has been extended to and including April 3, 1915. The defendant has further advised your orator that it denies that your orator has any right whatever on or along its right of way, and demands that upon the termination of the present working contract the said telegraph lines, poles, wires, structures, and implements of your orator be removed from their present location, and that your orator desist thereafter from constructing, reconstructing, maintaining, and operating said telegraph lines, and each of them, upon or along defendant's right of way, and desist from operating the telegraph stations, offices, and depots of your orator now established, maintained, and existing upon and along defendant's said right of way, and have intimated that, should your orator fail to comply with its said demands and requests, it will interfere with and remove, or attempt to remove, said telegraph lines, poles, wires, structures, instruments, and properties of your orator from their present location, and interfere with the operation by your orator of its said telegraph offices, depots, and stations upon or along defendant's right of way."

It is claimed in the bill that it is necessary for the Telegraph Company to resort to equity:

(a) To obtain the full and complete relief to which it is entitled.

(b) To avoid a multiplicity of actions and vexatious and expensive litigation.

(c) To avoid large damages, pains, and penalties to which it might be subjected for its failure to furnish telegraph service to the public and to the government.

(d) To prevent by decree of this court any discontinuance of, or interference with, its telegraph service upon or along the defendant's property.

(e) To obtain a decree of this court lifting the cloud upon its title and interest in its said easements or rights, and fully, finally, and completely determining and establishing its said easement upon or along the defendant's right of way.

(f) In case there should be a final decree, if the rights claimed are not irrevocable, assignable, and perpetual, and will not become so unless compensation be paid by the plaintiff to the defendant, or that the defendant is entitled to compensation, that the decree be rendered determining the amount of such compensation, if any, which should be paid by the Telegraph Company to the Railroad Company for the purpose of obtaining an irrevocable, assignable, and perpetual easement over the property in question.

(g) That in any event it will be necessary that the court should retain control of this litigation for the purpose of preventing interference with the plaintiff in its occupancy of the defendant's right of way until it can have a decree or judgment determining what it shall pay the defendant for the use of said right of way and a decree determining the amount of compensation to be paid by defendant to plaintiff for the temporary support of its said telegraph wires on the cross-arms, poles, and fixtures of the plaintiff upon or along the defendant's right of way and for the maintenance and repair thereof by your orator, should defendant desire

said wire to remain temporarily upon said poles, and restraining the defendant from maintaining and repairing such wires owned by it, inasmuch as it would be injurious to said telegraph lines and to the public service to permit two different sets of employés, employed by two different masters, to attempt to repair and work upon said telegraph lines.

(h) To prevent the immeasurable and irreparable loss and damage which the Telegraph Company would sustain, should its lines of telegraph along the defendant's right of way be destroyed, removed, or discontinued, for which damage proper or adequate compensation could not be obtained at law.

The prayers of the bill then are: (1) For a judgment or decree removing the cloud on plaintiff's title, as alleged; (2) for a judgment or decree enjoining and restraining the defendant from interfering with the plaintiff's telegraph lines along the defendant's right of way; (3) in the event it should so happen that the judgment or decree should determine that the Telegraph Company's easements, rights, titles and interest in, upon, under, along, through, or over defendant's right of way, property, and houses, or any part thereof, are not irrevocable, assignable, and perpetual, and are not to become so unless compensation be made therefor, that a decree be written determining the amount of such compensation, if any, which should be paid by the Telegraph Company to the Railroad Company; (4) for a restraining order and for subpœna.

The case is now heard on motion by defendant to dismiss. The grounds of said motion are:

First. That there is an insufficiency of facts mentioned in the bill and the exhibits thereto to maintain an equitable cause, because the allegations in the bill do not entitle the plaintiff to the measure of relief sought, or to any relief. That there are no well-pleaded facts in the bill justifying the plaintiff's assertion of and claim to a perpetual easement or other right or interest entitling it to occupy by its lines of telegraph defendant's right of way, etc. That the allegations in the bill state no valid equitable cause of action in favor of plaintiff under the laws and statutes of the United States, that the acts of Congress pleaded and plaintiff's acceptance thereof give no easement, right, or title to occupy defendant's right of way, etc., against its wishes and without its consent, and that there is no foundation for the plaintiff's claim (through alleged federal right) to remain upon and occupy defendant's right of way, nor does plaintiff make in said bill a valid and real federal question pertinent to its assertion of equitable rights, calling for equitable relief, but the questions sought to be set up are moot and speculative. That there are contained in the bill no sufficient and requisite averments of fact, justifying and substantiating the alternative cause of action sought to be set up, that there are no facts properly alleged which entitle complainant to have decreed by the court an easement or other right or interest by the payment of money to the defendant, etc. That plaintiff has failed to show by any well-pleaded facts that it has any easement, all of its allegations with respect thereto being unsupported conclusions. Indeed, if it has the right of condemnation, the statutes of the state are adequate for the exercise of this power, and a resort to equity is unnecessary.

Second. That there is a misjoinder of asserted causes of action in the bill, for that there are united therein several claims so different in character and so inconsistent each with the other as to render it improper that they should be litigated in the same cause. That the bill is not only multifarious, but also duplicitous.

Third. That the matters and things appearing upon the face of the bill affirmatively show that there are no equitable causes of action set out therein, and plaintiff by its own averments is deprived of any of the equitable relief sought. That the bill shows that the plaintiff has no perpetual, irrevocable, and assignable easement; that it has no equity which would justify the court in decreeing in its favor an easement upon the payment of money to the defendant; that it has no right to occupy the defendant's right of way, etc., by virtue of any right which the government of the United States may have. That the allegations of the bill and exhibits thereto conclusively show that plaintiff was a tenant or a licensee upon the right of way and other premises of the defendant, and that such tenancy and license have expired.

Fourth. That the bill shows that the plaintiff has complete remedy at law.

[1] The first question that arises in this case is: "What do the contracts between the plaintiff and defendant mean?" Were the agreements such that thereby and therein a term was provided as to which the Telegraph Company should have the right to occupy the defendant's right of way with its poles and wires, and the Railroad Company's depots and offices with its apparatus and appliances for transmitting messages, or were they, as contended by the Telegraph Company, mere working agreements concerning the manner in which the business of the companies should be carried on and with reference to the rights of the parties respectively as to the manner of conducting this business during the period named in the agreement?

It is only necessary to construe the last agreement between the parties, because it is the last, and because it is the expiration of that agreement which gives the Railroad Company the right, if it has it, to require the Telegraph Company to cease to occupy its right of way, depots, etc. I think the language of the whole agreement tends to show very conclusively that the agreement covered the right to occupy the rights of way of the Railroad Company, and it is to this right that the limitation period of the contract applied. Not considering other parts of the agreement, I think the language of paragraph 6 is sufficient to show that this was meant. The language of this paragraph is:

> "The Railroad Companies, so far as they legally may, hereby grant and agree to assure to the Telegraph Company the exclusive right of way, on, along, and under the line, lands, and bridges on both sides of the tracks of the railroads now or hereafter covered by this agreement, and any extensions and branches thereof, for the construction, maintenance, operation, and use of lines of poles and wires, and underground or other lines for commercial or public telegraphic and telephonic uses or business, with the right to put up or construct, or cause to be put up or constructed, from time to time, such additional wires," etc.

I do not see how any other meaning can be put upon this clause of the contract than that, at the time this last contract was entered into,

in 1902, the Telegraph Company realized and understood that it had no legal right upon the Railroad Company's right of way, or at all events that any right it might have claimed was so doubtful that it entered into this contract for the additional seven years' occupancy of the right of way and the additional rights mentioned in the agreement as to one year's additional occupancy, notice, etc. The acceptance of an agreement containing this language granting a right of way along the Railroad Company's line by the Telegraph Company shows necessarily that it either did not consider that it had that right before, or that it was so doubtful as to justify it in entering into this agreement. It is perfectly clear that the rights of the plaintiff to occupy the defendant's right of way and its depots and offices is ended, and was ended when this bill was filed, and that the Railroad Company has the right to insist that the Telegraph Company remove its poles, wires, and fixtures and office apparatus from its right of way and depots. It is unnecessary to consider what the Telegraph Company's prescriptive rights would have been to occupy the Railroad Company's right of way, considering the length of time it had been there, if these contracts had not been made. I think it perfectly clear that after these agreements were entered into the Telegraph Company became the tenant or licensee of the Railroad Company, and that its tenancy or rights as a licensee were terminated and ended by the expiration of the period named in the last agreement.

[2] I am wholly unable to see how any rights can be claimed in behalf of the Telegraph Company from the act of Congress of 1866. That act provides that any telegraph company then organized, or which may be thereafter organized under the laws of any state in the Union, shall have the right to construct, maintain, and operate lines of telegraph through and over any portion of the public domain of the United States and along any military or post roads of the United States, which have been or may hereafter be declared such by act of Congress, and over, under, or across the navigable streams or waters of the United States, provided they are so constructed as not to obstruct the streams or interfere with travel along the military and post roads. It then gives the right to use material from the public lands necessary for the construction, maintenance, and operation of its lines, and provides that it may pre-empt and use such portion of the unoccupied public lands subject to pre-emption through which its lines of telegraph may be located as may be necessary for its stations, not exceeding 40 acres for each station, such stations not to be less than 15 miles apart. The second section provides that telegraphic communications between the several departments of the government of the United States and their officers and agents shall, in their transmission over the lines of any of said companies, have priority over all other business, and shall be sent at rates to be annually fixed by the Postmaster General. The third section provides that the rights granted by this act shall not be transferred or assigned by any company acting under this act to any other corporation, association, or person: Provided that the United States may, after the expiration of five years from the date of the passage of the act, purchase all the telegraph lines,

property, and effects of any or all of said companies at an appraised value, to be ascertained by five competent, disinterested persons, two of whom shall be selected by the Postmaster General and two by the company, and one by the four previously selected. And section 4 provides that, before any telegraph company shall exercise any of the powers or privileges conferred by this act, it shall file its written acceptance with the Postmaster General of the restrictions and obligations required by this act.

This, as stated above, the Western Union Telegraph Company did in 1867. The only ground which has been urged here, so far as I understand the argument in favor of the rights under this act of Congress, is that Congress may, at any time, require the company to sell to it, and if its lines be interfered with and disintegrated, and especially this line over the Atlanta & West Point Railroad be taken from it, that it would be unable to comply with that to which it claims it has obligated to the government, that it could purchase the property at an appraised value whenever it should desire. A number of cases have dealt with the rights thus claimed under the act of 1866, but I think it is almost unnecessary to consider any of them, except the case of Western Union Telegraph Company v. Pennsylvania Railroad Company et al., 195 U. S. 540, 25 Sup. Ct. 133, 49 L. Ed. 312, 1 Ann. Cas. 517. That case deals so fully with the questions involved, and, in the opinion by Mr. Justice McKenna, recites so fully all previous cases on the subject and the questions involved, that consideration of any other cases would be useless. Perhaps it will sufficiently appear what was decided in that case by the headnotes, which are as follows:

"The act of Congress of July 24, 1866 (14 Stat. 221, Rev. St. § 5263 et seq.), giving telegraph companies the right to construct and operate their lines through, along, and over the public domain, military or post roads, and navigable waters of the United States, was a legitimate regulation of commercial intercourse by telegraph among the states and appropriate legislation to carry into execution the power of Congress over the postal service; it was merely an exercise of national power to withdraw such intercourse from state control and interference.

"This court has already held in Pensacola Telegraph Co. v. Western Union Tel. Co., 96 U. S. 1 [24 L. Ed. 708], and Western Union Tel. Co. v. Ann Arbor Railroad Co., 178 U. S. 239 [20 Sup. Ct. 867, 44 L. Ed. 1052], and now follows those decisions, that the act of July 24, 1866, does not confer upon telegraph companies the right to enter upon private property without the consent of the owner, or grant them the right of eminent domain.

"A railroad's right of way is property devoted to a public use, and has often been called a highway, and as such is subject, to a certain extent, to state and federal control; but it is so far private property as to be entitled to the protection of the Constitution, so that it can only be taken under the power of eminent domain, and a condition precedent to the exercise of the power of eminent domain is that the statute conferring it make provision for compensating the owner."

This case construes the act of July, 24, 1866, not only as it relates to the right of the Telegraph Company to occupy the right of way of a railroad, when it has once obtained it, continuously and permanently under the terms of this act (which I understand to be the Telegraph Company's claim here), but also as to the right of the court to deal with the matter of compensation, if the Railroad Company is

entitled to compensation as a condition to its use and occupancy by the Telegraph Company, and to ascertain and determine, in an equitable proceeding, the amount of such compensation. Mr. Justice McKenna, in the opinion, quotes from Pensacola Telegraph Co. v. Western Union Tel. Co., 96 U. S. 1, 24 L. Ed. 708, as follows (195 U. S. 562, 569, 573, 25 Sup. Ct. 138, 141, 142, 49 L. Ed. 312, 1 Ann. Cas. 517):

"'It [the act of 1866] gives no foreign corporation the right to enter upon private property without the consent of the owner and erect the necessary structures for its business, but it does provide that, whenever the consent of the owner is obtained, no state legislation shall prevent the occupation of post roads for telegraph purposes by such corporations as are willing to avail themselves of its privileges.' And again (96 U. S. 12): 'No question arises as to the authority of Congress to provide for the appropriation of private property to the uses of the telegraph, for no such attempt has been made. The use of public property alone is granted. If private property is required, it must, so far as the present legislation is concerned, be obtained by private arrangement with its owner. No compulsory proceedings are authorized. State sovereignty under the Constitution is not interfered with. Only national privileges are granted.'"

Further on in the opinion Mr. Justice McKenna uses this language:

"But in the act of July, 1866, there is not a word which provides for condemnation or compensation. The rule that when a right is given all the means of exercising it are given does not, as we have seen, apply to the extent contended for by the Telegraph Company. The exercise of the power of eminent domain is against common right. It subverts the usual attributes of the ownership of property. It must, therefore, be given in express terms or by necessary implication, and this was the reasoning in the Pensacola Case and applied directly to the act of 1866. We may repeat the language of the court: 'If private property is required, it must, so far as the present legislation is concerned, be obtained by private arrangement with its owner. No compulsory proceedings are authorized.'"

And before concluding the opinion this additional expression is used:

"It follows from these views that the act of 1866 does not grant the right to telegraph companies to enter upon and occupy the rights of way of railroad companies, except with the consent of the latter, or grant the power of eminent domain."

Considering this decision by the Supreme Court, it seems entirely unnecessary to consider further the question as to the rights the Telegraph Company gets by virtue of the act of 1866, and its acceptance of the same. It could not occupy and use the right of way of the Railroad Company without its consent, and that consent was obtained for a limited period of time, which time has expired. So far as this act of 1866 is concerned, the Telegraph Company cannot, by any of its provisions, condemn property of the Railway Company.

Another contention here, however, is, as I gather from the argument and the briefs, that the court, independently of this act and under its general power as a court of equity, may provide compensation to the Railroad Company for the Telegraph Company's occupancy of its right of way, and, further, that the court may, by injunction, prevent the Railroad Company from removing the Telegraph Company and its poles, wires, and general equipment from its right of way and depots until such proper compensation can be ascertained and decreed. This question was presented to the Circuit Court of Appeals for the

Sixth Circuit, in Western Union Telegraph Company v. Ann Arbor R. Co., 90 Fed. 379, 33 C. C. A. 113. That court, through Circuit Judge Taft, said, after quoting from Pensacola Tel. Co. v. W. U. Tel. Co.:

"The authority establishes, if authority were needed, that the telegraph company cannot occupy the line of defendant's railroad without the consent of defendant, or the consent of some predecessor in title, which is binding on the defendant. This, we have seen, is wanting. The suggestion, however, seems to be, if we understand it, that, because of the public necessities, the court ought to use its injunction process and shape its decree so as to effect an equitable condemnation of the easement of way. The court has no such power."

To sum up this whole case, it is this: The Telegraph Company voluntarily entered into an agreement with the Railroad Company for the occupancy of its right of way for a limited period, and that period has expired, and the Railroad Company has the right to demand that it cease the occupancy of its right of way. Its rights are not aided by the act of Congress or any federal right it may have, and, further, it is not the province of this court to condemn land, or to condemn rights in land, as here claimed.

I do not think that the plaintiff's bill states a case upon which any recovery can be had, or any decree in its favor granted. The result is that the bill must be dismissed.

In re HOAG.

(District Court, S. D. New York. July 6, 1915.)

BANKRUPTCY ⟹396—ASSETS PASSING TO TRUSTEE—CITY PENSION—"VESTED RIGHT"—"BOUNTY."

Where payments to a bankrupt were made by the city of New York under sections 165–167 of its charter (Laws N. Y. 1901, c. 466, as amended by Laws N. Y. 1911, c. 669) permitting the board of estimate and apportionment to retire from active service any employé who shall have served for 30 years and upwards, and who shall become incapacitated to perform his duties, and to award him an annual sum or annuity not exceeding one-half the amount which his annual salary averaged for the three years before his retirement, such city pension was not a "vested right," but a "bounty granted by the government" through the municipality to encourage persons engaged in the public service, and could be recalled at will, and so was not an asset passing to the bankrupt's trustee.

[Ed. Note.—For other cases, see Bankruptcy, Cent. Dig. §§ 659–668; Dec. Dig. ⟹396.

For other definitions, see Words and Phrases, First and Second Series, Bounty; Vested Right.]

In Bankruptcy. In the matter of Sidney Willett Hoag, bankrupt. Application to sell a city pension as an asset of the estate. Motion denied.

Harries A. Mumma, of New York City, for trustee.
J. Joseph Lilly, of New York City, for bankrupt.

AUGUSTUS N. HAND, District Judge. Application is made to sell as an asset of the estate a pension payable by the city of New York to the bankrupt. The payments to the bankrupt are made under sections 165, 166, and 167 of the city charter, which permits the board of estimate and apportionment to retire "from active service" any officer, clerk, or employé who shall have been in the employ of the city of New York for a period of 30 years and upwards, and who shall have become physically or mentally incapacitated for further performance of the duties of his position, and to award him an annual sum or annuity, to be fixed by such board, not exceeding, however, one-half of the amount which his annual salary or compensation averages for the period of three years immediately prior to the time of his retirement. The comptroller shall pay the annuities granted in monthly installments out of the receipts of excise money or liquor taxes belonging to the city of New York as constituted by this act; such payments to continue during the lifetime of the person or persons so retired.

The late Justice Bischoff held, in Hammitt v. Gaynor, 144 N. Y. Supp. 123, that such a provision was valid as a method of increasing the emoluments of persons in the public service. Justice Greenbaum in the same case rendered a similar decision. Hammitt v. Gaynor, 82 Misc. Rep. 196, 144 N. Y. Supp. 127. Justice Bischoff, in the case of Abelloff v. Weiss, reported in the New York Law Journal for August 14, 1910, treated the payment of a fireman's pension as exempt from execution under section 1391 of the New York Code of Civil Procedure, except as to one-tenth part thereof. Apparently this section must have been held applicable upon the theory that the pension was in the nature of a salary for past services, against which a continuing execution would lie under section 1391 of the Code.

Such a pension is not, however, under the main current of decisions of either the United States or the New York state courts, a vested right, but a bounty granted by the government through the municipality to encourage persons engaged in the public service. Pennie v. Reis, 132 U. S. 464, 10 Sup. Ct. 149, 33 L. Ed. 426; United States v. Teller, 107 U. S. 64, 2 Sup. Ct. 39, 27 L. Ed. 352; Frisbie v. United States, 157 U. S. 160, 15 Sup. Ct. 586, 39 L. Ed. 657; People ex rel. Price v. Woodbury, 38 Misc. Rep. 189, 77 N. Y. Supp. 241; Nagle v. Stagg, 15 Abb. Prac. (N. S.) 348; Matter of Friel, 101 App. Div. 155, 91 N. Y. Supp. 454. It can be recalled at will, and is not, therefore, an asset which passes to the trustee in bankruptcy.

The discussion in Bliss v. Lawrence, 58 N. Y. 442, 17 Am. Rep. 273, apparently assumes that a pension which is for past services is under the English law assignable, though the case decides only that an assignment of the salary of a public officer is contrary to public policy and void, because he should at all times have his salary available to enable him properly to perform his duties. The point, however, is not suggested that a pension is not an enforceable contract at all, but essentially a gratuity. This was decided in a case much stronger than the present, when the California Legislature had provided for the regular application of sums of money from the salaries of police officers to establish a pension fund and had afterwards repealed the

law. Even under these circumstances, the Supreme Court, in Pennie v. Reis, 132 U. S. 464, 10 Sup. Ct. 149, 33 L. Ed. 426, held that the policeman was without remedy, because the whole pension system was a bounty, establishing no vested rights. Against this the brief memorandum of Justice Bischoff in Abelloff v. Weiss, supra, stands alone, and even in that case only a continuing levy upon *one-tenth* of the payments seems to have been allowed.

For the foregoing reasons, the motion must be denied

In re HOAG.

(District Court, S. D. New York. October 1, 1915.)

1. BANKRUPTCY ⚷396—ASSETS—RIGHTS OF CREDITORS—"PROPERTY."

Pending a bankruptcy proceeding, a judgment creditor may not proceed against the bankrupt's pension as a retired employé of a city under the Bankruptcy Act, or under Code Civ. Proc. N. Y. § 1391, providing that, where any wages, debts, earnings, salary, income from trust funds, or profits are due and owing to a judgment debtor, or shall become due and owing, the judgment creditor may apply for, and the court must issue, an order directing that an execution issue against such wages, etc., since the pension prior to its payment is not "property," but is a mere bounty or gift, which is neither wages, debts, earnings, salary, income from trust funds, nor profits, and, the trustee having no right to it, creditors can have no higher rights.

[Ed. Note.—For other cases, see Bankruptcy, Cent. Dig. §§ 659–668; Dec. Dig. ⚷396.

For other definitions, see Words and Phrases, First and Second Series, Property.]

2. COURTS ⚷363—UNITED STATES COURTS—JURISDICTION—CONSTRUCTION OF STATE LAWS.

On application to the bankruptcy court by a judgment creditor of the bankrupt for permission to procure an execution against the bankrupt's pension as a retired employé of a city, the bankruptcy court is bound to consider the state law claimed to authorize such execution, since, while the state court may be called upon to decide the question in many instances, the bankruptcy court is equally charged with the duty of considering what is the law, when any application is made to it.

[Ed. Note.—For other cases, see Courts, Cent. Dig. §§ 939–949; Dec. Dig. ⚷363.]

In Bankruptcy. In the matter of Sidney Willett Hoag, bankrupt. On motion to modify the usual bankruptcy injunction, so as to permit the owner of a judgment against Hoag (procured within four months of bankruptcy) to issue an execution under section 1391, Code Civ. Proc. N. Y., against the bankrupt's pension as a retired employé of this city. Denied.

See, also, 227 Fed. 478.

L. L. Lewis, of New York City, for the motion.

J. J. Lilly, of New York City, for the bankrupt.

HOUGH, District Judge. [1] It has been decided in this court that Hoag's pension is something against which his trustee in bankruptcy

---

⚷For other cases see same topic & KEY-NUMBER in all Key-Numbered Digests & Indexes

has no claim. The theory of the judgment creditor is that, since the trustee has no claim upon it, he (the creditor), may proceed against it as if the bankruptcy did not exist. Very curious results would follow from this theory; for, if it be correct, Hoag may ultimately be discharged from all his schedule debts, on the theory that he had given up all of his property, and yet not only this creditor, but all his creditors, might be left to pursue this pension, notwithstanding the provisions of the bankruptcy law that the debts themselves were extinguished.

It is not seen how a judgment against Hoag, or any one else, can be extinguished for some purposes, and not extinguished for all. The rights of a creditor of a bankrupt cannot be higher than the right of the trustee for those creditors as well as for the bankrupt. Logically, if the trustee cannot proceed against Hoag's pension, no creditor of Hoag can do it. Therefore it is well to inquire why the trustee cannot so proceed. As was well held by Judge Hand, it is because the pension is not property of Hoag; it is a bounty or gift. The periodical payments only become property in Hoag's hands when he actually gets money or money's worth. The propriety of this holding seems to me plain when the language of section 1391 is examined. What according to that statute may be reached are "wages, debts, earnings, salary, income from trust funds or profits." A bounty or gift is none of these things.

[2] It was said in argument that this question was for the state court to decide. Undoubtedly the state court may be called upon to decide it in many instances; but this court is equally charged with the duty of considering what is the law when any application is made to it, and in this instance it is bound to consider, not only the bankruptcy law, but the law of the state of New York.

To me it is perfectly clear that under neither law has the creditor any right to proceed against Hoag's pension, and the motion is denied.

SPRING v. WEBB et al.

(District Court, D. Vermont. March 12, 1915.)

1. ABATEMENT AND REVIVAL ⟹74—DISMISSAL FOR FAILURE TO REVIVE.

Under equity rule 45 (198 Fed. xxx, 115 C. C. A. xxx), providing that, in the event of the death of either party, the court may, in a proper case, upon motion, order the suit to be revived by the substitution of the proper parties, and that, if the successors or representatives of the party fail to make such application within a reasonable time, any other party may, on motion, apply for such relief, and the court, upon any such motion, may make the necessary orders for notice to the parties to be substituted, and for the filing of such pleadings or amendments as may be necessary, where, after the death of the plaintiff in a stockholder's suit, no motion to revive or continue the suit was made within a reasonable time, defendants properly moved to dismiss the bill, as the words "as may be necessary," in that rule, do not merely modify the words "pleadings or

amendments," but refer to everything that the court may do upon motion made.

[Ed. Note.—For other cases, see Abatement and Revival, Cent. Dig. §§ 429–431, 433–440, 442–444; Dec. Dig. ⚷74.]

2. ABATEMENT AND REVIVAL ⚷74—SUITS IN EQUITY.

An "abatement" in equity is not necessarily a destruction of the suit, like an abatement at law, but is merely an interruption of the suit, suspending its progress until new parties are brought before the court, and if this is not done at the proper time the court will dismiss the suit.

[Ed. Note.—For other cases, see Abatement and Revival, Cent. Dig. §§ 429–431, 433–440, 442–444; Dec. Dig. ⚷74.

For other definitions, see Words and Phrases, First and Second Series, Abatement.]

3. ACTION ⚷1, 16—NATURE OF "ACTION"—"CAUSE OF ACTION"—RIGHT TO BRING SUIT."

An "action" is merely the form in which a cause of action is presented, while the term "cause of action" is synonymous with "right to bring suit," and that right is based upon the ground or grounds on which an action may be maintained.

[Ed. Note.—For other cases, see Action, Cent. Dig. §§ 1–7, 85–93, 262; Dec. Dig. ⚷1, 16.]

For other definitions, see Words and Phrases, First and Second Series, Action; Cause of Action.]

4. ABATEMENT AND REVIVAL ⚷52—ACTIONS WHICH MAY BE REVIVED—STOCKHOLDERS' SUITS.

A stockholder's suit, in which the bill charges the failure or refusal of the corporation to bring actions for torts against the defendants, is capable of revivor, after the death of the original plaintiff, in the name of any other shareholder similarly situated, or in the name of the deceased plaintiff's executors, if his shares of stock have descended to them, even conceding that actions of tort fail with the death of the plaintiff under the state law, and that the United States courts obey, in respect of abatement and revival, the laws of the state in which they sit, since the cause of action put forward in a stockholder's suit is derivative, and the stockholder's primary right is the right of the corporation, which does not fail with the stockholder's death.

[Ed. Note.—For other cases, see Abatement and Revival, Cent. Dig. §§ 248–254; Dec. Dig. ⚷52.]

In Equity. Suit by Andrew C. Spring, a stockholder of the Rutland Railroad Company, against William Seward Webb and others. On motion to dismiss the bill. Motion denied conditionally.

The action was brought by a shareholder of the Rutland Railroad Company, on behalf of himself and all others similarly situated, etc., and is of the kind referred to in equity rule 27 (198 Fed. xxv, 115 C. C. A. xxv). Spring was the sole plaintiff, and he died on December 14, 1914. At an earlier stage of the case opportunity had been offered to other persons to come into the action and become coplaintiffs, but upon terms which have never been complied with, wherefore by the death of Spring the position of plaintiff herein was left vacant. The defendants therefore now represent that, no motion having been made to revive or continue the suit by plaintiff's solicitors, and the cause of action not being one that does survive, an order should be entered dismissing the suit. The formal motion is for such dismissal, or for such other relief as to the court shall seem meet.

Louis Marshall, of New York City, for plaintiff.

Frederick H. Button, of New York City (John W. Weed, of New York City, of counsel), for defendants.

HOUGH, District Judge. Considering the number of stockholders' suits brought in this country, it is singular that so little authority is to be found on the question here presented. The industry of able counsel has not relieved the court of seeking what appear to be first principles.

[1] It is, I think, plain that this motion is properly brought, both in substance and as to time, under equity rule 45 (198 Fed. xxx, 115 C. C. A. xxx). The applicable words of that rule are:

"In the event of the death of either party the court may * * * upon motion order the suit to be revived by the substitution of the proper parties. If the successors or representatives of the deceased party fail to make such application within a reasonable time, then any other party may *on motion apply for such relief* * * * *as may be necessary.*"[1]

Prior to the passage of this rule the opinion was widely entertained that there was no method of reviving an equity suit, except by bill of revivor. Dillard v. Central Virginia Iron Co. (C. C.) 125 Fed. 157. Yet the practice was firmly established of permitting a defendant to move to dismiss, if such bill of revivor was not filed within a reasonable time after the decease of a plaintiff. Brown v. Fletcher (C. C.) 140 Fed. 639.

Bills of revivor are cumbrous survivals of antiquity, and in my judgment rule 45 was intended to regulate and make identical the method of revival and the method of penalizing a failure to revive; i. e., to make simple motions applicable to both contingencies.

Having regard to the past history of this case and the length of time that has elapsed since Spring's death, there has been a failure to move with reasonable speed on the part of the plaintiff. The appropriate action in such a condition of affairs would be to fix a period within, and lay down terms upon, which substituted parties might come in. But before getting this far it is necessary to consider defendants' proposition that the cause of action set forth in the bill does not survive, wherefore any formal revival or continuance of this action is futile.

[2] It seems to me to clear the atmosphere to recall the distinction between abatement of suit in equity and abatement of action at law. As was said by Story, J., in Hoxie v. Carr, 1 Sumn. 73, Fed. Cas. No. 6,802, an abatement in equity—

"is not necessarily a destruction of the suit, like an abatement at law, where a judgment quod cassetur, is entered. It is merely an interruption to the suit, suspending its progress until the new parties are brought before the court; and if this is not done at a proper time, the court will dismiss the suit."[2]

---

[1] NOTE.—It will probably be said that the above arrangement of words gives to the adverbial phrase "as may be necessary" a larger scope than is proper. It will be urged that grammatically it modifies or explains the immediately preceding words "pleadings or amendments," and does not modify or explain anything else. This point is not susceptible of argument; one must take it or leave it at a glance. In my opinion the phrase "as may be necessary" applies to everything that the court may do upon motion made.

[2] NOTE.—Justice Story here relies upon certain English authorities, to which may be added those enumerated in 1 Corp. Jur. 159, note 82, d. These citations show satisfactorily that rule 45 is a reversion to the ancient and simple English practice.

In a personal action at common law a suit abated utterly and forever, because the plaintiff's death abated the writ, and it is only by virtue of statutes, however ancient that this result has been prevented. No such rule ever obtained in equity, as Story, J., set forth with considerable elaboration in Clarke v. Mathewson, 12 Pet. 171, 9 L. Ed. 1041.

The orthodox view of the history of equity (as put by Blackstone) is that the jurisdiction of the Chancellor arose to correct "that wherein the common law by reason of its universality was deficient." This resounding phrase means, among other things, that what equity originally took cognizance of law could not. Therefore, as long as the questions cognizable in the two jurisdictions were radically different in kind, no conflict was possible on the question of abatement and revivor. But for generations bills in equity have been filed to enforce legal rights, and it is obviously true that, if the death of a party terminated the legal right sought to be enforced, equity would follow the law, and the equitable action become after death incapable of continuance.

This is the proposition at the basis of this motion, viz., that this bill in equity is brought to enforce certain rights, legal in their nature, capable of enforcement at law by the Rutland Railroad, and only cognizable in equity because the power of chancery is necessary to enforce (in favor of the shareholders of the Rutland) rights which the corporation itself failed and refused to urge.

To put the matter in another way, it has always been possible to revive an action in equity; "action" meaning merely the machinery by which rights are to be enforced. It was not originally possible in any way to review and continue a personal action at law abated by death; but by reason of statutes, some of them centuries old, it has long been possible so to do.

[3] It is, however, idle to continue or revive any action, either at law or in equity, if the cause of action dies with the party. There is an obvious distinction between action and cause of action. Action is merely the form in which the cause of action is presented, while of the latter phrase it has been said that:

> "In its simplest analysis the term 'cause of action' is synonymous with 'the right to bring a suit,' and that right is based upon the ground or grounds on which an action may be maintained." Payne v. New York, etc., R. R. Co., 201 N. Y. at page 440, 95 N. E. at page 21.

[4] Therefore the ultimate inquiry as to the death or survival of what in common parlance is called a suit or action is to ascertain the true nature of the cause of action presented in the suit. It has not been found easy to define the nature of the cause of action put forward in what is now commonly known as a "stockholder's action."

It is undoubtedly derivative in its nature; that is, the stockholder can advance nothing that the corporation could not urge. It is essential to his success to prove that he is doing no more than the corporation itself ought to have done, and the fruits of his victory must flow, not to him, but to the corporation, whose negligence, oversight, or wrongdoing is the excuse for his presence as a plaintiff. Porter v. Sabin, 149 U. S. 473, 13 Sup. Ct. 1008, 37 L. Ed. 815; Dickerman v. Northern

Trust Co., 176 U. S. 188, 20 Sup. Ct. 311, 44 L. Ed. 423; De Neufville v. New York & Northern Ry. Co., 81 Fed. 10, 26 C. C. A. 306; Willoughby v. Chicago, etc., Rys. Co., 50 N. J. Eq. 656, 25 Atl. 277; Hearst v. Putnam Mining Co., 28 Utah, 184, 77 Pac. 753, 66 L. R. A. 784, 107 Am. St. Rep. 698. It seems, therefore, clear that a stockholder's primary right to sue is the right of the corporation, and that, unless the corporation's right fails with his death, the suit ought not to abate, whether it be brought in equity or at law, if in any jurisdiction such suit at law be permissible.

It is at this point that defendants' argument seems to me to fail. Let it be admitted that each one of the sins of omission charged in the bill consists in a failure or refusal on the part of the Rutland Company to bring an action of tort against the defendants. Let it also be admitted that such actions of tort fail with the death of the plaintiff under the statutes and decisions of Vermont, and that the courts of the United States obey in respect of abatement and revivor the rules of the state in which they sit. Martin's Administrator v. Baltimore & Ohio R. Co., 151 U. S. 673, 14 Sup. Ct. 533, 38 L. Ed. 311. Yet it still remains true that the Rutland Railroad has not died, and that the primary cause of action which Spring endeavored to assert herein is still in existence unabated.

This line of reasoning is not impugned by such cases as Witters v. Foster (C. C.) 26 Fed. 737; for that case goes upon the plain doctrine that the cause of action therein asserted died with the death of the complainant in the equity suit. An opposite result was reached, but the same principle illustrated, in Allen v. Luke (C. C.) 163 Fed. 1018; the difference apparently being that between the law of Massachusetts and the law of Vermont.

If search be made for cases of dying stockholders, neither court nor counsel has been able to discover more than Edwards v. Mercantile Trust Co. (C. C.) 121 Fed. 203, where the point was avoided by the intervention before the death of the original complainant of a second shareholder, who was permitted to carry on the suit. Nevertheless it seems to me that this position is only consistent with the argument hereinabove advanced; for, if the original complainant had presented a cause of action which depended upon any right of his own, the presence of an intervening complainant could not prevent the death of the first man's right with that man's decease. One or two or any number of complainants in a stockholder's action can do no more, whether acting jointly or singly, than to enforce the corporation's cause of action. So that the Edwards Case is only sustainable upon the theory that the cause of action survived; and if that cause of action did survive, then the suit or action in equity must be revivable in favor of any person or persons entitled to carry it on.

The question as to who may carry on the suit does not seem easy of answering. Any other shareholder similarly situated may come in, and so may the personal representatives of Spring, if the shares of stock which alone gave Spring the right to sue have descended to the executors of his will.

The analogy of a taxpayer's action is not without instructive interest, although in Gorden v. Strong, 158 N. Y. 407, 53 N. E. 33, the right to revive and continue such a suit is based upon the New York statute. Yet the inquiry there put is the logical one, viz.: What was the nature of the deceased complainant's cause of action? A very fair analogy under a comparatively ancient equitable head of jurisdiction is found in a creditor's suit, and in Austin v. Cochran, 3 Bland (Md.) 337, some consideration of this point may be read.

It results that in my opinion this action is capable of revivor; that the persons naturally to be looked to as substituted plaintiffs are the executors of Spring, both of whom are citizens and residents of Massachusetts, as was Spring himself.

It is stated in the affidavit of counsel for Spring that it is now sought to bring in certain other shareholders described as a "protective committee." This committee was given the opportunity of coming in by order filed November 13, 1914, provided that they complied with certain conditions. This has not been done, and any application to let them in is new matter, and not before me on this motion.

But, whether other parties plaintiff may be hereafter admitted or not, they will come into a revived suit, and, considering the residence of Spring's executors, the condition of the record, and the time that has been permitted to elapse, it is just that the right to revive be made contingent upon security for costs.

It is therefore ordered: (1) That the motion to dismiss the bill be denied; (2) that an application to revive the action will be granted, if made within 30 days from the date of filing this opinion, and accompanied by security for taxable costs, fees, disbursements, and expenses herein, whether now accrued or hereafter to accrue, in the sum of $5,000, with security to be approved by this court; and (3) if such application for revivor, accompanied by such bond for costs, etc., be not made as to the motion, and filed as to the bond, within said 30 days, that then and in such case an order may be forthwith entered dismissing the bill, with costs to be taxed.

PUBLIC SERVICE ELECTRIC CO. et al. v. HEROLD.

(District Court, D. New Jersey. February 9, 1915.)

No. 498.

INTERNAL REVENUE ⟹9—EXCISE ON CORPORATION—"DOING BUSINESS."

A corporation is "doing business," and so subject to the excise tax, under Act Aug. 5, 1909, c. 6, 36 Stat. 11, where, though leasing all its property and franchises, except its franchise to be a corporation, it exerts its corporate powers, whether at its own institution or that of the lessee, by an activity carried on, as by issuance and sale of bonds, to increase its estate, or to do things more than reasonably necessary to enable the lessee to enjoy the rights in existence at the time of the lease or incidental thereto.

[Ed. Note.—For other cases, see Internal Revenue, Cent. Dig. §§ 13-28; Dec. Dig. ⟹9.

For other definitions, see Words and Phrases, First and Second Series, Doing Business.]

At Law. Action by Public Service Electric Company and another against Herman C. H. Herold. Judgment for defendant.

Frank Bergen and Edward Ambler Armstrong, both of Newark, N. J., for plaintiffs.

J. Warren Davis, U. S. Atty., of Camden, N. J., and Walter H. Bacon, Asst. U. S. Atty., of Bridgeton, N. J., for defendant.

HUNT, Circuit Judge. On motion for a nonsuit by the defendant. The question for decision is whether or not the plaintiff corporation South Jersey Gas, Electric & Traction Company was doing business within the meaning of the corporation excise tax law and liable to pay taxes assessed against it for the year 1912. See 36 Stat. c. 6.

South Jersey Gas, Electric & Traction Company is the outgrowth of a merger and consolidation of a number of other corporations. In 1903 the South Jersey Gas, Electric & Traction Company made a lease to the Public Service Corporation of New Jersey of all of its property for 900 years. The lease contains many covenants substantially similar to those referred to in the cases of Public Service Railway Company and Bergen Turnpike Company v. Herold, 227 Fed. 500, Public Service Railway Company and Rapid Transit Street Railway Company v. Herold, 219 Fed. 301, Public Service Gas Company and Newark Consolidated Gas Company v. Herold, 227 Fed. 496, and Public Service Railway Company and Camden Horse Railroad Company v. Moffett, 227 Fed. 494. It covered all of the gas and electric light plants and works and the franchises which belonged to the lessor, excepting the franchise to be a corporation, stock books, title records, and certain other property not necessary to be considered. The lessor agreed to do all things necessary to enable the lessee to enjoy the powers, rights, and property conveyed by the lessor, and that it would, at the expense and request of the lessee, exercise all such franchises, and do any and all acts consistent with its rights under the lease as would be proper and necessary for the protection and enjoyment by the lessee of all the franchises and interests granted to it by the lease. The lessee also gave to the lessor the right in the name of the lessee to apply for further rights to lay and maintain pipes for gas plants, and to use the lessor's name in taking any and all action for the protection and enjoyment of the rights conveyed by the lease. The lessee agreed to pay the interest on the bonds outstanding and the interest on any bonded indebtedness that might thereafter be created for the purpose of extending the time of payment of the existing bonds or refunding the same. The lessee agreed to operate the property and to extend the business as might be necessary and proper. The lessee had the right to notify the lessor whenever it (the lessee) might require money for purposes of meeting expenses for adding to or extending or bettering the plant or acquiring new property, and it would become the duty of the lessor to take such action with respect to bonds as would protect the rights of the lessee. The lessor agreed to join the lessee in any and all conveyances necessary to accomplish any sale or conveyance subject to mortgage or renewal.

The record made up on the trial shows that at a meeting of the

directors of the lessor corporation held on June 10, 1912, the question of the sale of certain shares of stock owned by the lessor in five certain other gas and electric light companies was considered. The properties in which such shares of stock were owned (and it is to be gathered that South Jersey Gas, Electric & Traction Company owned the bulk of properties) were located in the state of Pennsylvania. The proper officers of the company (lessor herein) were authorized to sell all the shares of the capital stock in such several companies and to make proper assignments of the shares to the purchasers or to their nominee upon the payment of a sum of not less than $200,000. The board of directors also resolved that the trustee under a general mortgage of the South Jersey Gas, Electric & Traction Company bearing date the 27th of February, 1903, should be requested to release from the lien of mortgage all of the shares referred to which were then pledged with it as trustee, and the officers of the corporation were authorized to pay over to the Fidelity Trust Company, as trustee, the proceeds of the sale of the shares of capital stock to be used in improvements and betterments of the property subject to the mortgage. The board further resolved that:

"The lessees now operating said properties be, and they are hereby, requested to consent to said sale and release possession of the premises to said purchasers."

At another meeting of the directors held on November 4, 1912, the minutes show that the corporation was notified that the sum of $750,726.96 had been expended by the Public Service Gas Company in making additions to, and extensions and betterments of, the plant of South Jersey Gas, Electric & Traction Company, and bonds were authorized to be issued by South Jersey Gas, Electric & Traction Company in order to reimburse the Public Service Gas Company for moneys expended, as provided in the lease already referred to. Accordingly, application to the proper authorities was provided for whereby South Jersey Gas, Electric & Traction Company could issue bonds, which bonds should be thereafter delivered to the Public Service Gas Company to reimburse the latter company for expenditures. Thereafter further issues of bonds were provided for and the directors of the lessor corporation were notified by the Public Service Corporation of New Jersey and the Public Service Gas Company and Public Service Electric Company that they desired the proceeds of the sale of the stock of the Pennsylvania corporations heretofore referred to to be paid to the Public Service Gas Company and Public Service Electric Company to reimburse them for moneys expended in improvements. Authorization for reimbursement was made. At some time later some insurance money was collected by the lessor, which became due by reason of a fire which damaged certain properties covered by the lease. The Public Service Gas Company was authorized to collect the money for the purpose of rebuilding and restoring the damaged premises.

Inasmuch as it would appear that the shares of stock which were sold had relation to the obligations included within the lease, the pro-

ceeds of such sales having been paid to the lessee to reimburse it for moneys expended in betterments, the transaction should be looked upon as but incidental to the payment of moneys due by the lessor to the lessee under the covenants of the lease rather than as a partial "carrying" on of the business for which the corporation was created. But even from such a viewpoint there is still present the fact that the lessor company with detailed care used its powers to issue the bonds heretofore referred to. It may be that none of the bonds issued were for the payment of property acquired under new franchises obtained through the efforts of the lessor company at the behest of the lessee; yet they were issued, not merely for betterments, but for extensions made by the lessor company, and, as may be gathered from the very large sum covered by the bonds, the transactions for which the bonds stood were very much more than mere maintenance, and such betterments and extensions as were reasonably incidental to the enjoyment of the originally leased property.

Without attempting to arrive at any exact definition, but adverting to some general principles which would seem to be pertinent, it may be said that, where there has been a practical surrender of all of the lessor's rights to operate and maintain, reserving the right of corporate existence, and where the use of such reserved corporate power is only for preserving the property leased, or for enabling the lessee to do such things effectively as are reasonably incidental to the preservation of the property and the enjoyment by the lessee of the rights and privileges conveyed by the terms of the lease, there is not an engagement in business by the lessor. But where (whether at its own instigation or that of the lessee) the lessor corporation exerts its corporate powers by an activity carried on to increase the estate of the lessor, or to do things more than reasonably necessary to enable the lessee to enjoy the rights in existence at the time of the lease and such rights as are incidental thereto, then the lessor company may be held to be engaged in the business for which it was incorporated, and is therefore brought within the statutes.

Undoubtedly there may be a doing of business by performing less than all of the principal acts to do which the corporation has been organized, even though such acts are but steps in doing the principal thing for which the corporation exists. For example, a corporation cannot buy a street railway line, and lease the right to operate it, and actually surrender the operation to a lessee, yet, under its retained franchise to be a corporation, continue to obtain new franchises, buy and sell lands, condemn lands under eminent domain, inspect its properties, and sell bonds for the payment of newly added property or extensions of a substantial character, and still say it has done these things for the lessee, and is not carrying on the business for which it was organized, simply because it is not itself actually running the cars and otherwise controlling the physical operation of the railway. Under such conditions it really does the fiscal business of the operating company, and, though it does it in aid of the operating business of the lessee, it is none the less in the enjoyment of the privilege of doing business.

It is oftentimes difficult to determine just where the line should be drawn, but subject to these general observations it does not seem to me that the lessor company in this case can be excluded from a fair application of the statutes. Judgment must therefore go in favor of defendant.

Let a judgment go accordingly.

PUBLIC SERVICE RY. CO. et al. v. HEROLD.

(District Court, D. New Jersey. January 25, 1915.)

No. 497.

INTERNAL REVENUE ⚷9—EXCISE ON CORPORATION—"DOING BUSINESS."

A corporation which, having leased all its property and franchises, except its franchise to be a corporation, thereafter affirmatively exerts its power for the acquisition of additional franchise rights, is "doing business," so as to be subject to the excise tax, under Act Aug. 5, 1909, c. 6, 36 Stat. 11.

[Ed. Note.—For other cases, see Internal Revenue, Cent. Dig. §§ 13-28; Dec. Dig. ⚷9.

For other definitions, see Words and Phrases, First and Second Series, Doing Business.]

At Law. Action by the Public Service Railway Company and another against Herman C. H. Herold. Judgment for defendant.

Frank Bergen and Edward Ambler Armstrong, for plaintiffs.

J. Warren Davis, U. S. Atty., of Camden, N. J., and Walter H. Bacon, Asst. U. S. Atty., of Bridgeton, N. J., for defendant.

HUNT, Circuit Judge. Action to recover an amount paid as excise tax for 1912. Payment was made November 28, 1913. Before payment application for abatement was made, and after payment claim for refund. The question is whether the lessor was doing business during the year 1912. 36 Stat. c. 6.

By a lease dated May 1, 1911, the New Jersey & Hudson River Railway & Ferry Company leased all of its property and franchises, except its franchise to be a corporation, to Public Service Railway Company for 900 years from that date. The lease contained covenants very similar with respect to the obligations of lessor and lessee to those included in the lease more particularly referred to in the case of Public Service Railway Company and Bergen Turnpike Company v. Herold (No. 496) 227 Fed. 500. It appears, however, from the testimony adduced on the trial, that the lessor corporation during the year 1912 exerted its corporate powers, not only with respect to certain certificates of stock in companies which were merged into and formed other companies, but joined in the acceptance of a franchise ordinance that was passed by the municipal authorities of Edgewater, and under the seal of the corporation formally accepted such ordinance. The corporation also authorized the renewals of several leases for certain properties and signed the leases. It appears

that the renewals of the leases referred to were bargained for by the Public Service Railway Company and that the income from the leases is collected by the Public Service Railway Company.

If there were nothing in this case except the renewals of leases, which appear to be for pre-existing tenancies, and the issuance of bonds, it would be very doubtful whether the New Jersey & Hudson River Railway & Ferry Company could be said to have done business in 1912. But when we find that it affirmatively exerted its power for the acquisition of additional franchise rights, the conclusion seems irresistible that it was carrying on business and doing acts which were evidently performed with a view of enhancing the value of the property leased and of adding thereto. The case is therefore brought within the scope of the views expressed in the opinion filed in the case of Public Service Railway Company and Camden Horse Railroad Company v. Moffett (No. 485) 227 Fed. 494.

The defendant is entitled to judgment.

PUBLIC SERVICE ELECTRIC CO. et al. v. HEROLD.

(District Court, D. New Jersey. January 19, 1915.)

No. 484.

1. INTERNAL REVENUE ⟹38—RECOVERY OF TAX PAID—LIMITATION.
   The limitation for action to recover an illegally collected excise tax on a corporation as doing business is two years from its payment.
   [Ed. Note.—For other cases, see Internal Revenue, Cent. Dig. §§ 83, 84; Dec. Dig. ⟹38.]

2. INTERNAL REVENUE ⟹9—EXCISE ON CORPORATION—"DOING BUSINESS."
   A corporation, though it has leased its electric power plant, and all its property and franchises, except the franchise to be a corporation, is "doing business," and so subject to the excise tax, under Act Aug. 5, 1909, c. 6, 36 Stat. 11; one of the express purposes of its incorporation being to lease such plants.
   [Ed. Note.—For other cases, see Internal Revenue, Cent. Dig. §§ 13–28; Dec. Dig. ⟹9.
   For other definitions, see Words and Phrases, First and Second Series, Doing Business.]

At Law. Action by the Public Service Electric Company and another against Herman C. H. Herold. Judgment for defendant.

Frank Bergen and Edward Ambler Armstrong, both of Newark, N. J., for plaintiffs.

J. Warren Davis, U. S. Atty., of Camden, N. J., and Walter H. Bacon, Asst. U. S. Atty., of Bridgeton, N. J., for defendant.

HUNT, Circuit Judge. This action is associated with No. 481, Public Service Railway Company and Rapid Transit Street Railway Company v. Herold (D. C.) 219 Fed. 301, and No. 483, Public Service Gas Company and Newark Consolidated Gas Company v. Herold, 227 Fed. 496, heretofore decided, in that it involves a right to recover taxes

assessed by the Commissioner of Internal Revenue under the act of Congress approved August 5, 1909, as special excise taxes for the years ended December 31, 1909, 1910, 1911 and 1912.

The United Electric Company on July 1, 1907, leased all of its property and franchises, except its franchise to be a corporation, to the Public Service Corporation of New Jersey for 999 years. Thereafter the lease was assigned to the Public Service Electric Company, plaintiff herein. Averments of the complaint are that United Electric Company of New Jersey has carried on no business since the making of the lease, except the receipt of rental under the lease and distribution thereof among its stockholders. Defendant pleads the statute of limitations, admits the lease, and sets forth that the United Electric Company was subject to the payment of the tax under the corporation tax law.

[1] Recovery of the amounts of taxes paid for 1909 and 1910 is denied, under the ruling in case No. 481, Public Service Railway Company and Rapid Transit Street Railway Company, Plaintiffs, v. Herman C. H. Herold, Defendant (D. C.) 219 Fed. 301.

[2] Upon the question whether or not the United Electric Company of New Jersey was doing business, there is evidence to show the following state of facts: The United Electric Company of New Jersey was incorporated March 4, 1899, under the General Corporation Act of the state of New Jersey. 2 Comp. St. 1910, p. 1592. Among the specific things named as the purposes of the corporation were these:

"To manufacture, buy, sell, lease, let, or operate any or all machinery or appliances for the manufacture, generation, storage, accumulation * * * of any or all types of electric current." "To erect, buy, sell, operate, lease, and let power plants and generating stations for the manufacture * * * and distribution of electric current," etc. "To manufacture, buy, sell, lease, and let fixtures, chandeliers, electroliers, brackets, * * * appurtenances used for or in connection with the manufacture * * * or use of electric current for light; * * * install, erect, and operate, sell, or lease, wires, cables, and fixtures, * * * and manufacture and deal in all apparatus and things * * * in connection with * * * electricity." "To buy, sell, operate, or lease pole lines, * * * and to sell or lease to other individuals or corporations the right to string electric wires * * * for local delivery. * * * To buy or lease from, or sell or let to, any other individual or corporation the right to string * * * wires. * * *"

There were other clauses authorizing leasing and operating for others works and plants already constructed, either in the name of such other corporations or individuals or in the name of the incorporated company or otherwise.

Acting under its power to carry out the objects for which it was incorporated, the plaintiff United Electric Company of New Jersey, on July 1, 1907, leased to the Public Service Corporation of New Jersey all its franchises, electric light plants, and works, owned or operated by the lessor, or which it might thereafter own, wheresoever situated, together with all the buildings, machinery, etc., and all contracts, privileges, and franchises connected with the demised premises, except the franchise to be a corporation, its transfer books, dividend book accounts, deeds, grants, and other evidences of the right and title to the properties now owned, possessed, or controlled by the lessor, and

also excepting certain other property described in the schedule. The lessor covenanted that it would, on request of the lessee, make and deliver all conveyances reasonably desired by the lessee for the full enjoyment by the lessee of the franchises and rights granted. The lessee is also given the right under the lease to apply for and operate in the name of the lessor rights to erect and maintain poles and to construct conduits, and for its own benefit to use the lessor's name in prosecuting or defending suits. The lessee agreed to pay the interest on bonds amounting to $20,000,000, to pay rental, and during the lease to pay all taxes, and to operate the lessor's electric light works and plants, and to carry on, preserve, and extend the business theretofore carried on by the lessor. The lessor agreed to join with the lessee in the execution of any deed necessary to convey any property or franchise then subject to mortgage. The lessor agreed that it would do anything necessary or proper to do by way of continuing any existing bonds, mortgage, or mortgages, or renewing refunding bonds or mortgages, for the payment or extension of the time of payment, where the negotiation is controlled by the lessee, and it is admitted that the United Electric Company acquired an extension of a franchise in March, 1912.

United Electric Company having been incorporated for the purposes, among others, of erecting and leasing and letting power plants for the distribution of electric power, and for erecting and selling, operating and leasing, pole lines and letting or leasing to other individuals or corporations rights to string wires, and to do other things more specifically included within its original articles of incorporation, and, having exerted its power by securing an extension of a franchise, has become, it seems to me, lawfully subject to the payment of the tax. One of the very purposes of its organization was to construct, if it chose, or to carry on the business of leasing, electric plants—that is to say, a primary purpose of its organization was to avail itself of the privilege of leasing and letting electric plants. It may not have done all the business that it was authorized to do under the articles of incorporation, but it was at the time of the assessment of the taxes doing some of the principal things for which it was incorporated, and was carrying on a business within the definition of its chartered powers. For these reasons it cannot stand upon the same ground that was taken by Rapid Transit Street Railway Company, where it appeared that the primary purposes for which incorporation had been had were not being fulfilled. Public Service Railway Company and Rapid Transit Street Railway Company v. Herold (No. 481) supra.

Defendant is entitled to judgment in accordance with these views.

PUBLIC SERVICE RY. CO. et al. v. MOFFETT.

(District Court, D. New Jersey. January 25, 1915.)

No. 485.

1. INTERNAL REVENUE ⟹38—RECOVERY OF TAX PAID—LIMITATIONS.
The limitation for action to recover an illegally collected excise tax on a corporation as doing business is two years from the payment.
[Ed. Note.—For other cases, see Internal Revenue, Cent. Dig. §§ 83, 84; Dec. Dig. ⟹38.]

2. INTERNAL REVENUE ⟹9—EXCISE ON CORPORATION—"DOING BUSINESS."
A corporation, which leases its business as it exists, but in doing so preserves a right to extend such business for the benefit of the lessee, if the lessee requests it, is thereafter "doing business," and so subject to the excise tax, under Act Aug. 5, 1909, c. 6, 36 Stat. 11, where it exerts such reserve power in a substantial way, so as to acquire additional property, though doing so for the benefit of the lessee as well as itself.
[Ed. Note.—For other cases, see Internal Revenue, Cent. Dig. §§ 13–28; Dec. Dig. ⟹9.
For other definitions, see Words and Phrases, First and Second Series, Doing Business.]

At Law. Action by the Public Service Railway Company and another against Isaac Moffett. Judgment for defendant.

Frank Bergen and Edward Ambler Armstrong, both of Newark, N. J., for plaintiffs.

J. Warren Davis, U. S. Atty., of Camden, N. J., and Walter H. Bacon, Asst. U. S. Atty., of Bridgeton, N. J., for defendant.

HUNT, Circuit Judge. [1] This is another of the cases associated with No. 481, Public Service Railway Company & Rapid Transit Street Railway Company, Plaintiffs, v. Herold, Defendant (D. C.) 219 Fed. 301. It involves taxes paid for 1909, 1910, 1911 and 1912. Following the ruling in case 481, the defendant's plea of the statute of limitations with respect to the taxes for 1909 and 1910 must be sustained.

[2] Whether or not the Camden Horse Railroad Company was doing business during the years 1911 and 1912 is necessarily involved. It appears that the property of the Camden Horse Railroad Company and its franchises were leased to the Camden & Suburban Railway Company, and that this last-named corporation by the lease of its property included its leasehold estate in the Camden Horse Railroad Company; this last referred to lease running to the South Jersey Gas, Electric & Traction Company, which assigned to another corporation as lessee, which thereafter assigned to Public Service Railway Company, one of the plaintiffs herein. The lease runs for 999 years, and includes all of the property of the Camden Horse Railroad Company, except its franchise to be a corporation. The active physical operation of the Camden Horse Railroad Company is carried on by the Public Service Railway Company. The property of the Camden Horse Railroad Company consists of street railway tracks, overhead construction, wires, car barns, and other things necessary in and about the carrying on of an electric car line.

Under the terms of the lease made by the Camden Horse Railroad Company there was an agreement that such company would exercise its corporate powers and functions at any time and would apply for additional franchises as might be necessary whenever the lessee should desire an extension of the railway demised or any branches or double tracking thereof or the extension of tracks. It appears that the Camden Horse Railroad Company did, in 1912, make a petition for the granting of an ordinance by the city council of Camden for the purpose of building a connecting railroad between certain streets in the city of Camden. Presumably the right to make such connection was valuable and important, or it would not have been applied for. Consent of certain property owners was necessary to be obtained, and was secured, and the Camden Horse Railroad Company accepted the ordinance in October, 1912. Again, at a meeting of the corporation on March 26, 1909, the Camden Horse Railroad Company directed its officers to make and have issued bonds to pay off and discharge certain maturing bonds in the amount of $250,000, and to procure the cancellation of certain bonds and a mortgage. This was done by issuing the bonds of the Camden Horse Railroad Company, the object being to replace $250,000 of bonds which matured under another mortgage. Furthermore, the corporation sold certain real property in 1909, the sale being referred to in the meeting of the directors of December 14, 1909, as having been had "in the usual course of business." It appears that such sales of realty were made, as were the acceptances of ordinances filed, at the requests of the lessee corporation. Inspection of the leased property was also had by a committee acting in behalf of the lessor.

Clearly part of these activities by the lessor went beyond such as were reasonably necessary for the protection and preservation of the property included in the lease as existing at the time of the execution thereof, and farther than was requisite only to enable the lessor to live up to the covenants of the lease with respect to such then existing property and yet refrain from engaging in business. Buying and selling pieces of real estate, applying for and obtaining valuable franchise rights, and so substantially extending routes, meant changes in the quantity and value of the property owned and in existence when the lease was made. They represent the exercise of vital, active, corporate forces by the lessor in effectually, at the instance of the lessee, adding to or changing its properties which had been leased. Thus the attitude of the owner became, not that of an investor, who leases all its property and does nothing except to preserve the property leased, guard its titles, collect its rents, and distribute them, but rather that of one who, alive to business opportunities, adds to its principal properties, exerts itself to dispose of some investments, to make others, and in co-operation with or at the request of the lessee, does all with a view to enhancing the value of the leased estate. The case is, therefore, outside of the rule in McCoach v. Minehill Railway Co., 228 U. S. 295, 33 Sup. Ct. 419, 57 L. Ed. 842, in that such a lessor is doing business. A lessor corporation, which transfers its business as it exists to-day, yet in doing so preserves a right to ex-

tend such business for the benefit of the lessee, if the lessee requests it, and which thereafter exerts such reserved power in a substantial way, so as to acquire additional property, ought not to say that it is not doing business, because it performs the acts it does for the benefit of its lessee as well as of itself.

Defendant is entitled to judgment.

PUBLIC SERVICE GAS CO. et al. v. HEROLD.

(District Court, D. New Jersey. January 19, 1915.)

No. 483.

1. INTERNAL REVENUE ⟹38—LICENSE TAXES—RECOVERY BACK.

Corporation taxes, assessed by the Commissioner of Internal Revenue and paid, cannot be recovered back, where the taxpayer did not comply with Rev. St. U. S. §§ 3226, 3227, 3228 (Comp. St. 1913, §§ 5949–5951), providing for the recovery of taxes wrongfully collected within two years after accrual of the right of action, and for submission of claim within that time.

[Ed. Note.—For other cases, see Internal Revenue, Cent. Dig. §§ 83, 84; Dec. Dig. ⟹38.]

2. INTERNAL REVENUE ⟹9—CORPORATION TAX—"DOING BUSINESS."

A gas company leased all of its property, the contract of lease providing that the lessee should assume the company's contracts and should be entitled to use the company's name whenever necessary to have the benefit of its franchises. It was also agreed that the lessor's plan should be maintained by the lessee, who should make any necessary or advisable extensions. The company retained its corporate organization, paying secretary's salary, directors' fees, and for books and postage used in the distribution of dividends and the payment of interest on bonds. No new bonds, however, were issued, although stock owned by the company in another corporation was voted. *Held*, that the company was not "doing business," within Act Aug. 5, 1909, c. 6, 36 Stat. 11 (Comp. St. 1913, §§ 6300–6308), and so was not liable to corporation taxes.

[Ed. Note.—For other cases, see Internal Revenue, Cent. Dig. §§ 13–28; Dec. Dig. ⟹9.

For other definitions, see Words and Phrases, First and Second Series, Doing Business.]

At Law. Action by the Public Service Gas Company and another against Herman C. H. Herold, originally brought in the Supreme Court of New Jersey, and removed to the federal court on certiorari. Judgment for plaintiffs.

Frank Bergen and Edward Ambler Armstrong, both of Newark, N. J., for plaintiffs.

J. Warren Davis, U. S. Atty., of Trenton, N. J., and Walter H. Bacon, Asst. U. S. Atty., of Bridgeton, N. J., for defendant.

HUNT, Circuit Judge. This action was originally brought in the Supreme Court of New Jersey, county of Essex, and was removed to this court on a writ of certiorari. A trial was had before this court on November 5, 1914.

The action is for the recovery, with interest from the dates of payment, of certain taxes assessed against the Newark Consolidated Gas Company by the Commissioner of Internal Revenue under the act of Congress approved August 5, 1909, as special excise taxes for the years ended December 31, 1909, 1910, 1911, and 1912. The taxes were paid, under protest, by Public Service Gas Company.

[1] Following the decision filed in case No. 481, Public Service Railway Company and Rapid Transit Street Railway Company v. Herold, 219 Fed. 301, the plaintiffs have failed to show a right to a refund of the taxes assessed for 1909 and 1910, in that they did not comply with the provisions of sections 3226, 3227, and 3228 of the Revised Statutes of the United States (Comp. St. 1913, §§ 5949–5951).

[2] Passing to the taxes for 1911 and 1912, we find the question is whether the Newark Consolidated Gas Company was doing business. In the case of Public Service Railway Company and Rapid Transit Street Railway Company v. Herold, No. 481, the corporation, Rapid Transit Street Railway Company, was wholly inactive, except as defined in the statement of facts included in the opinion in that case. But here the defendant has submitted evidence showing a number of acts of a different kind performed by the Newark Consolidated Gas Company during the years 1911 and 1912.

These are among the material facts: The Newark Consolidated Gas Company was incorporated in 1898 by the merger and consolidation of some five other gas companies, each of which was incorporated in New Jersey to engage in the business of supplying gas and water to various municipalities within the state of New Jersey. The Newark Consolidated Gas Company, as a result of the consolidation, was clothed with the rights, privileges, powers, immunities, and capacities which had theretofore been granted to and possessed by the several corporations which had been merged into the Newark Consolidated Gas Company. On December 1, 1898, the Newark Consolidated Gas Company leased all its property and franchises, except its franchise for corporate existence, to United Gas Improvement Company of Pennsylvania. The term of this lease was 999 years. On the same day (December 1, 1898) this lease was assigned to Essex & Hudson Gas Company, and by various mesne assignments thereafter became vested in Public Service Gas Company of New Jersey, plaintiff herein. Under the lease the lessee received all the gas plants and works owned and operated by the lessor, together with all property belonging to the lessor as a going concern, and all rights, privileges, and franchises connected with or relating to the lessor company, or any part thereof, reserving, however, for the lessor the franchise to be a corporation and rentals covenanted to be paid. The lessor further granted unto the lessee "the right to make use of its corporate name in the use of said franchises or in the making of contracts and in the conduct of business," the lessee to hold the lessor harmless from any damages resulting therefrom. The lessor company agreed to do all necessary things to maintain its corporate existence, franchises, rights, and privileges, and the lessee agreed that it would in good faith, to the best of its ability, do all that it could to preserve and extend the business

of the leasing party. All contracts existing with the Newark Consolidated Gas Company for public lighting and for the supply of gas generally were to be performed by the lessee. Detailed provision is made with relation to mortgages outstanding and bonds that have been issued and contracts existing.

The evidence showed that the franchises are still in existence, and it is under franchises that gas plants are located and supplied with gas in the various municipalities. It also appears that the Newark Consolidated Gas Company voted stock which it owned in corporations apparently in no way identified with any of those which were part of the number which went into the consolidation heretofore referred to. For instance, on September 1, 1909, a special meeting of the directors of the Newark Consolidated Gas Company was held to authorize the voting of the stock of the East Newark Gaslight Company, then owned by the Newark Consolidated Gas Company, in favor of a proposed lease of the property and franchises of the East Newark Gaslight Company to the Public Service Corporation, and a resolution was passed naming the Fidelity Trust Company of New Jersey to vote stock in favor of ratifying such proposed lease. Again, on December 17, 1909, at a meeting of the Newark Consolidated Gas Company directors, representatives of the Newark Consolidated Gas Company were appointed to attend the annual meeting of the Orange Gaslight Company, under the proxies of the Newark Consolidated Gas Company, to vote the stock owned by such company for the election of directors, or for any other business that might properly come before the meeting. The Orange Gaslight Company is not one of the constituent companies of the Newark Consolidated Gas Company. The stockholders and directors of the Newark Consolidated Gas Company hold meetings, but the Newark Consolidated Gas Company has issued no new securities, has acquired no property, and has issued no bonds since January 1, 1909. Examination and inspection of the leased property is made by the lessor company, and pipe line extensions are being frequently made in the name of Public Service Gas Company, which, however, obtains the right to make them through the franchises acquired by the leases and assignments already referred to.

From these facts I conclude that thus far, except for the receipt of the money provided for by the lease and distribution thereof among its stockholders and the payment of the interest on the bonds and the maintaining of the organization of the company, the Newark Consolidated Gas Company has itself carried on no business for which it was organized during the years 1909, 1910, 1911, and 1912. It is true various sums were expended during each of the years referred to by the Newark Consolidated Gas Company for the maintenance of its corporate organization, secretary's salary, directors' fees, stationery, check books, minute books, postage, etc.; but these things do not affect the case under the application of the rule of McCoach v. Minehill Railway Co., 228 U. S. 295, 33 Sup. Ct. 419, 57 L. Ed. 842. Indeed, many of the provisions of the lease here involved are substantially like those which were before the Supreme Court in the Minehill Case

There, as here, there was provision that the lessee should keep the premises in good order and repair, should maintain and efficiently operate the same, and should protect the lessor company against liabilities, damages, claims, and suits by reason of anything done or omitted by the lessee company in the premises.

Furthermore, in the Minehill Case, as in this, there was an agreement that the lessor company should maintain its corporate existence, and that it would, when requested to do so, put in force and exercise corporate powers possessed by it, to the end that the lessor company might avail itself of every right, franchise, and privilege in respect to the use, management, maintenance, renewal, and extension right appertaining to the business to be carried on. Notwithstanding such provisions, the Supreme Court, recognizing that the lease was one authorized by law, regarded the instrument as in effect one constituting the lessee company the public agent for the operation of the property and as effective in preventing the lessor company from carrying on business in respect of the maintenance and operation of the property there involved so long as the lease should continue. The court was therefore of opinion that it was the lessee company, and not the lessor company, that was doing business with respect to the property covered by the lease. Again, in the Minehill Case, the attention of the court was specifically addressed to the point that the lessor company was holding meetings of its stockholders, was declaring dividends, collecting rentals, managing finances, and investing funds, maintaining offices, and preserving its corporate franchises. Nevertheless, the court held that the effect of these several activities was not to constitute the doing of business for which the company was organized. The doctrine of the Minehill Case really rests upon the principle that, where the lessor corporation has become wholly inactive, it is in a position not unlike that of a retired investor, who lives upon his income, declining to exert any business forces to do the things he has leased or granted to others. There is, then, no exercise of the privilege of carrying on the business passed to others.

It therefore seems impossible to distinguish the essential features of this case from those in the Minehill. In this observation no thought is lost of these points: One of the clauses of the present lease requires maintenance by the lessee of the various plants, mains, pipes, etc., in the state of efficiency in which they were at the time of delivery, and that they shall be extended by the lessee with the increase of profitable demand for service of gas, or such increase shall be stimulated whenever the lessee shall deem judicious. It is also provided that the lessee company shall have the right to make use of the corporate name of the lessor in the use of franchises or in the making of contracts and in the conduct of the business, the lessee to hold the lessor harmless from any damages resulting therefrom, and it appears that the Public Service Gas Company, lessee herein, is making "extensions" of gas mains and pipes from time to time in carrying on the business for which the Newark Consolidated Gas Company was organized. But there is nothing to show that the Newark Consolidated Gas Company has exerted any of its charter powers

in aiding the lessee company to make these extensions in any way for the benefit of the lessee, except in having authorized the use of its name, as the lease provides. Obviously, considering the character of the property leased, a gas plant in cities and towns, no reasonable enjoyment of the rights conveyed under the terms of the lease could be had unless the lessee company could make reasonable extensions of gas mains under its franchises. Apparently to cover such enjoyment, and to withdraw from active carrying on of the gas business, the lessee was given the express right to make such reasonable extensions as could have been made by the lessor under its franchises.

I would say that merely having granted the right of the use of the lessor's name to the lessee in making contracts, and the subsequent use by the lessee of the lessor's name in making extensions, does not justify a ruling that the lessor was carrying on business under the act of Congress as interpreted in the Minehill Case already cited. Upon the whole case, I find that the things done by the Newark Consolidated Gas Company did not constitute the carrying on of business, and that it ought not to have been assessed for 1911 and 1912. Judgment for amounts paid for taxes for those years should go in plaintiffs' favor.

As to taxes for 1909 and 1910, the defendant is entitled to prevail.

PUBLIC SERVICE RY. CO. et al. v. HEROLD.

(District Court, D. New Jersey. January 25, 1915.)

No. 496.

INTERNAL REVENUE ⟹9—CORPORATION TAXES—"DOING BUSINESS."

Where a corporation leased its property, franchises, rights, and privileges, the lessee agreeing to make extensions to the lessor's lines of railway, etc., and the corporation performed no acts save to receive rentals, it was not liable to corporation taxes, under Corporation Tax Act Aug. 5, 1909, c. 6, 36 Stat. 11 (Comp. St. 1913, §§ 6300–6308), because not "doing business."

[Ed. Note.—For other cases, see Internal Revenue, Cent. Dig. §§ 13–28; Dec. Dig. ⟹9.

For other definitions, see Words and Phrases, First and Second Series, Doing Business.]

At Law. Action by the Public Service Railway Company and another against Herman C. H. Herold. Judgment for plaintiffs.

Frank Bergen and Edward Ambler Armstrong, both of Newark, N. J., for plaintiffs.

J. Warren Davis, U. S. Atty., of Trenton, N. J., and Walter H. Bacon, Asst. U. S. Atty., of Bridgeton, N. J., for defendant.

HUNT, Circuit Judge. Action to recover taxes paid for 1909, 1910, 1911, and 1912 under the Corporation Tax Law. Act Aug. 5, 1909, c. 6, 36 Stat. 11 (Comp. St. 1913, §§ 6300–6308). The facts shown by the record in this case are substantially these:

⟹For other cases see same topic & KEY-NUMBER in all Key-Numbered Digests & Indexes

The lessor corporation had authority to build a street railroad, and in January, 1908, leased for 999 years to the Public Service Railway Company its lines of railway, lands, bridges, car barns, poles, wires, and all other property of every character, and all rights, privileges, and franchises connected with the demised property, excepting its franchise to be a corporation, its seal, stock, and dividend account books, office furniture, and deeds and documents showing its right and title to the property leased. The lease contains covenants whereby the lessor agrees to make any conveyances and do any act necessary to protect the rights of the lessee and enable the lessee to extend the plants and franchises if it, the lessee, elects to do so, and the lessee has the right from time to time to apply for and operate in the name or in the right of the lessor any further rights, privileges, or franchises necessary for the proper protection of the property demised or the making of extensions of the lines of the lessor, and for its own benefit may use the lessor's name or rights in bringing any suits or taking action which may be necessary for the protection or enjoyment of the demised property. The lessee covenants that it will use and enjoy the property and franchises and privileges demised, subject to the mortgages on the property of the lessor and will pay taxes, assessments, and charges of every kind lawfully imposed during the continuance of the lease, and any sums of money which the lessor might become liable to pay for the possession or perpetuation of any of its powers, privileges, or franchises. The lessee agrees to operate the property and to maintain it in good condition, make betterments, and that all such betterments, additions, and renewals, when acquired, shall become the property of the lessor and a part of the premises and property demised. The lessor agrees to join with the lessee in any deeds necessary to accomplish the sale of any property, and the lessor is to do anything necessary with respect to the renewal or refunding of bonds and mortgages that the lessee requests it to do during the life of the lease. The lessor has the right to enter upon the property and inspect the same for the purpose of ascertaining its condition and the character of the management.

Under the ruling in case 481, Public Service Railway Company and Rapid Transit Street Railway Company v. Herman C. H. Herold, 219 Fed. 301, defendant is entitled to judgment for the taxes paid for the years 1909 and 1910. It appears from the evidence heard upon the trial that, during the years 1911 and 1912, the Bergen Turnpike Company has done no business, except to receive the rentals provided for in the lease heretofore referred to and to maintain its corporate existence, retain its office, and do such things as were done by the lessor corporation in the case of McCoach v. Minehill Railway Co., 228 U. S. 295, 33 Sup. Ct. 419, 57 L. Ed. 842. Undoubtedly it stood ready to exercise its powers retained by virtue of corporate organization, if the lessee required it to exert such powers; but it did nothing other than such things as are to be regarded as receiving the ordinary "fruits that arise from ownership of property." It is therefore not liable to pay the tax assessed, and is entitled to judgment for the amount of the taxes so paid for the years 1911 and 1912.

TRENTON & MERCER COUNTY TRACTION CORPORATION et al. v. INHABITANTS OF CITY OF TRENTON et al.

(District Court, D. New Jersey. October 14, 1915.)

1. CARRIERS ⟹12—STATE REGULATION OF RATES—POWERS OF STATE BOARD.

Act N. J. April 21, 1911 (P. L. p. 374), creating a state board of public utility commissioners and defining its powers, provides by section 17 that the board shall have power to hear and determine whether an increase, change, or alteration in any existing rate charged by a public utility, including street railway companies, is just and reasonable, and to suspend such increase, change, or alteration for a period of not exceeding three months "pending such hearing and determination." *Held*, that the statute does not require a notice and hearing to authorize the board to make such an order of suspension, which merely preserves the status quo.

[Ed. Note.—For other cases, see Carriers, Cent. Dig. §§ 7-11, 15-20; Dec. Dig. ⟹12; Street Railroads, Cent. Dig. § 151.]

2. COURTS ⟹508—FEDERAL COURTS—SUIT TO RESTRAIN ACTION BY STATE BOARD.

Where the question whether an increase in rates by a street railroad company is just and reasonable is pending before a state board vested by the Legislature with power to determine the same, a federal court will not before the state board has passed upon the question, or had an opportunity to do so, interfere by injunction to restrain action by such board because the right to so increase the rates is based on ordinances claimed to constitute contracts which the state cannot constitutionally impair.

[Ed. Note.—For other cases, see Courts, Cent. Dig. §§ 1418-1423, 1425-1430; Dec. Dig. ⟹508; Injunction, Cent. Dig. § 72.]

In Equity. Suit by the Trenton & Mercer County Traction Corporation, the Mercer County Traction Company, the Trenton, Hamilton & Ewing Traction Company, and the Trenton Street Railway Company against the Inhabitants of the City of Trenton, Frederick W. Donnelly, Mayor, and Ralph W. E. Donges, John J. Treacy, and John W. Slocum, constituting the Board of Public Utility Commissioners of New Jersey. On motion for preliminary injunction. Denied.

On application for preliminary injunction to restrain the city of Trenton and its mayor from proceeding under a certain ordinance of the city, passed on October 22, 1909, and to restrain the board of public utility commissioners of New Jersey from continuing a certain order made by them on August 17, 1915, and from conducting a hearing, and taking jurisdiction of the case in which the order was made.

Before WOOLLEY, Circuit Judge, and RELLSTAB and HAIGHT, District Judges.

Frank S. Katzenbach, Jr., Edward M. Hunt, and George W. MacPherson, all of Trenton, N. J., for plaintiffs.

Charles E. Bird, of Trenton, N. J., and George L. Record, of Jersey City, N. J., for defendant city of Trenton and its mayor.

Frank H. Sommer, of Trenton, N. J., for defendant Board of Public Utility Commissioners.

HAIGHT, District Judge. Three of the plaintiffs are the owners of a street railway system in the city of Trenton, N. J., and the fourth is

operating the system as lessee. Many years ago one of the predecessors in title of the plaintiff, the Trenton Street Railway Company, began to sell to such persons as wished them six tickets for 25 cents, each ticket good for one fare of 5 cents. This practice was continued until September, 1909, when it was discontinued for about two weeks, but, after some conferences and negotiations with the city officials, was restored, and has since been followed by the various operating companies. On October 22, 1909, the city passed an ordinance which required the sale of six of such tickets for 25 cents on all cars operated by the Trenton Street Railway Company in the city. On August 13, 1915, the lessee company notified the city and the board of public utility commissioners of New Jersey of its intention to discontinue the sale of such tickets. In this notice it claimed that the ordinance of October, 1909, was invalid, and asserted its right to charge a fare of five cents for each passenger over five years of age, within the limits of Trenton, by virtue of certain alleged contracts between the city and the companies of which it is lessee. Thereupon, on motion of the city, the board on August 17, 1915, made an order suspending the proposed change until November 16, 1915, and fixing a date for hearing on the merits. The plaintiffs were not represented before the board when the order was made. They claim that it was made without notice to them and without affording them an opportunity to be heard. The bill also alleges that the mayor of the city has threatened, pursuant to the power vested in him by the ordinance before mentioned, to revoke the licenses of the cars operated by the lessee company, in case the latter refuses to continue to sell six tickets for 25 cents.

After the order was made by the board the plaintiffs filed a bill in this court, wherein they pray that the board may be enjoined from continuing the order of August 17th, from conducting a hearing, and from taking jurisdiction of the matter at all, and also an injunction against the city and its mayor from enforcing the penalty prescribed in the ordinance. Upon the filing of the bill an application was made to the writer of this opinion for a preliminary injunction. An order to show cause why the injunction prayed for should not be allowed, was granted, but without an ad interim restraint. It being considered that one or more of the questions presented, if the plaintiffs' contentions were sound, would make the provisions of the act of March 4, 1913, c. 160, 37 Stat. 1013 (Comp. St. 1913, § 1243), applicable, the application for the preliminary injunction, upon the return of the order to show cause, was heard by three judges, one of whom is a Circuit Judge.

The grounds upon which the plaintiffs claim that they are entitled to relief in this court are two: First. That certain ordinances of the city of Trenton and the acceptance thereof by some of the plaintiffs and their predecessors constituted contracts which could not be altered or changed by the city or the state of New Jersey, and which would be impaired, contrary to the provisions of section 10 of article 1 of the federal Constitution, by the enforcement of the ordinance of October, 1909, and the continuance of the order of August 17, 1915, or any order which the board might thereafter make which did not recognize their right to charge a straight five-cent fare. Second. That the order of the

board was made without notice to the plaintiffs, and without affording them an opportunity to be heard, and thus deprived them of property without due process of law, contrary to the fourteenth amendment.

[1] We have found it unnecessary to consider the interesting question presented by the first contention, as to whether contracts such as the plaintiffs claim do in fact exist. The second ground requires a determination as to whether the order complained of was in fact made without notice to the plaintiffs and without affording them an opportunity to be heard, and, if so, whether notice was necessary before the board could have legally made it. The board of public utility commissioners was created by an act of the New Jersey Legislature approved April 21, 1911 (P. L. 1911, p. 374), and was thereby vested with certain defined powers—among them to fix just and reasonable rates to be charged by various public utilities, included in which are street railway companies, whenever it should determine any existing rate to be unjust, unreasonable, or insufficient, and to hear and determine whether any increase, change, or alteration in rates, which might thereafter be made by any public utility, would be just and reasonable. The board was also vested with power, "pending such hearing and determination" of the latter question, to order, for a period not exceeding three months, the suspension of the increase, change, or alteration until it should have approved the same. It is by virtue of the last-mentioned power that the board presumed to act in making the order in question. After the lessee company sent the notification to the board of its intention to discontinue the sale of six tickets for 25 cents, the latter caused a copy of the same to be sent to the mayor of the city, with a letter advising him that if the city desired to submit anything to the board, or to make any motion in respect to the proposed action by the company, an opportunity would be afforded on August 17th. On the same day the board caused a letter to be sent to the lessee company acknowledging receipt of the notice, asking when it proposed to make the change, and inclosing a copy of the letter sent to the mayor. The company was not represented before the board at the hearing, and, as far as appears, was not notified whether the city proposed to take any action or make any motion before the board on the date specified, or otherwise. On that date, however, the city was represented, and on the motion of its solicitor the order in question was made. It thus appears that the only notice the plaintiffs had was that on a certain day the board would hear any motion that the city intended to make; but they were never notified that the city intended to make any motion whatsoever, or what it would be, and were afforded no opportunity to defend against the motion which was made and the order which the board entered.

Under these circumstances, if notice and hearing were necessary prerequisites, we think the plaintiffs were not given such notice or afforded such an opportunity to be heard in respect to the action which was taken as to satisfy the "due process of law" clause of the fourteenth amendment. But we think that the statute creating the board and defining its powers authorized an order of suspension to be made without notice or hearing. The powers of the board, so far as are necessary to be considered, are conferred by sections 16 and 17 of the act. Section 16 provides:

"The Board shall have power"—then follows, in 11 separate paragraphs, an enumeration of the powers. In some of these paragraphs the exercise of the power is expressly limited to "after hearing"; in others, to "after hearing upon notice."

Section 17 provides:

"The board shall have power, after hearing, upon notice, by order in writing, to require every public utility as herein defined"—then follows, in 8 separate paragraphs, an enumeration of powers.

It thus appears that the Legislature has carefully defined when a hearing and notice are necessary. The last of the paragraphs of section 17 confers two separate powers: One to hear and determine, either upon complaint or upon the board's own initiative, whether an increase, change, or alteration in any existing rate is just and reasonable; and the other to suspend, for a limited time, such increase, change, or alteration, "pending such hearing and determination." The latter power is expressly conferred in so many words, and by a separate sentence, in which there is no requirement that the order can be made only after hearing and notice. It is a separate power, deemed necessary by the Legislature, no doubt, to give more efficacy to the former. The reason for granting it, as well as the context, leads us to the conclusion that it is not limited or qualified by the opening paragraph of section 17, before quoted. That paragraph, we think, refers to the power to determine whether the proposed change would be just and reasonable.

It is difficult to understand why the Legislature should have required two hearings on the same question. If no other question were presented than that of reasonableness of the rate, as would most often be the case, the first hearing, to be of any effect whatever, must, of necessity, be practically the same as the second. On the other hand, it is reasonable to assume that the Legislature would wish to clothe the board, to which it had delegated the state's rate-making right, with power to preserve the status quo until there could be a hearing and determination upon the merits, without the delay incident to notice and hearing. This is the same power exercised by and conferred upon the Interstate Commerce Commission by the act of June 18, 1910 (36 Stat. 552, c. 309). Nor do we doubt the right of the Legislature to grant such a power, without violating the fourteenth amendment. Nothing more was done than to clothe a quasi judicial body with a power which has always been exercised by courts of competent jurisdiction.

[2] If the plaintiffs, in fact, have contracts which are beyond the power of either the municipality or the state to change or impair, the act of the board in temporarily depriving them of the benefit thereof did not infringe their constitutional rights to any greater extent than like rights are infringed, without violating constitutional provisions, when a court of competent jurisdiction, upon ex parte application, restrains the exercise of them pendente lite in order to preserve the status quo, pending a hearing and decision. The board did not attempt to determine whether any contract rights existed, or what they were, or whether they were beyond the right of the municipality or state to abrogate or change them. It merely held the whole matter in abey-

ance until there could be an investigation and a determination could be reached. The plaintiffs cannot assume that the board's decision will not recognize and give due effect to any contractual rights which they have. Under these circumstances it would, in our judgment, be improper for this court to attempt to adjudicate these questions, before the board which the Legislature of New Jersey has clothed with the legislative power over rates and whose jurisdiction has already been invoked, has done so, or had an opportunity to do so. In this respect this case cannot be distinguished from Prentis v. Atlantic Coast Line Co., 211 U. S. 210, 29 Sup. Ct. 67, 53 L. Ed. 150. It was urged there, as here, that the plaintiffs had contracts with the state, which could not be changed except under certain conditions, which did not exist in that case. The court, after remarking that if the state had bound itself by contract not to cut down the rates as contemplated, there would seem to be no reason why the suit should not then be entertained in the federal court, said:

"But it would be premature and is unnecessary to decide whether the state has done so or not. No rate is irrevocably fixed by the state until the matter has been laid before the body having the last word. It may be that that body will adhere to the old rate or will establish one that will not be open to the charge of violating the contracts alleged. * * * On the question of contract, as on that of confiscation, it is reasonable and proper that the evidence should be laid, in the first instance, before the body having the last legislative word."

We feel that the doctrine thus announced is a wholesome one for our dual form of government, and that it should not be limited in its application by subtle distinctions or nice refinements. But the right of the plaintiffs to have this court pass upon the validity of the ordinance which is attacked cannot be denied on that ground, if the other essential prerequisites for the intervention of a court of equity are present. Although a decision that the ordinance is valid might involve a finding that the other ordinances, which the plaintiffs claim constitute contracts, were abrogated by it, and thus incidentally determine some of the questions before the state board, still the ordinance complained of was in itself a completed legislative act. The power and duty of a federal court, when applied to, to enjoin the execution of such acts, when they impair rights guaranteed by the federal Constitution, is unquestioned. Willcox v. Consolidated Gas Co., 212 U. S. 19, 29 Sup. Ct. 192, 53 L. Ed. 382, 48 L. R. A. (N. S.) 1134, 15 Ann. Cas. 1034.

There is, however, no sufficient proof to warrant the belief that the municipal authorities contemplate taking any action under that ordinance, except to assert it in support of their position before the board of public utility commissioners. The bill alleges, it is true, that the mayor has threatened to act under the ordinance and to revoke the licenses of the plaintiffs' cars; but the affidavit to support this allegation is purely upon information and belief. On the other hand, the action of the city counsel in appearing before the board and invoking its power indicates very clearly that there is no present intention on the part of the mayor or city authorities to take the drastic action alleged in the bill. It would therefore, under these circumstances, be improper to grant a preliminary injunction against the enforcement

of the penalties prescribed by the ordinance, even if it is invalid. Hence there is no necessity to consider whether it is valid or not.

The motion for the preliminary injunction will, accordingly, be denied, but without prejudice to a renewal of the same as respects the ordinance, if the city authorities attempt to enforce any of the penalties provided therein.

UNITED STATES v. UNITED SHOE MACHINERY CO. et al.

(District Court, E. D. Missouri, E. D. November 9, 1915.)

No. 4489.

1. MONOPOLIES ⟹12—CLAYTON ANTI-TRUST ACT—MONOPOLISTIC LEASES.

Leases, by the maker of a very large percentage of all the shoe machinery made in the United States, of machines to shoe manufacturers, consisting of principal and auxiliary machines, the use of both kinds being necessary in the completion of a shoe, which leases contain provisions that the lessee shall not use the machine in the manufacture of footwear which has not had certain essential operations performed upon it by other machines leased from the lessor, that he shall use the leased machine exclusively for the class of work for which it is designed, that he shall obtain all duplicate parts and all supplies for the machine exclusively from the lessor at such prices as it may establish, and other similar provisions, and which further give the lessor the right to remove all leased machines in the event of the violation by the lessee of any term of any one of the leases, *held*, on motion for preliminary injunction, illegal, as in violation of Clayton Act Oct. 15, 1914, c. 323, § 3, 38 Stat. 731.

[Ed. Note.—For other cases, see Monopolies, Cent. Dig. § 10; Dec. Dig. ⟹12.]

2. MONOPOLIES ⟹10—CLAYTON ANTI-TRUST ACT—CONSTRUCTION—APPLICATION TO EXISTING CONTRACTS.

Clayton Anti-Trust Act, § 3, which makes it unlawful to lease or sell machinery, etc., on any condition or agreement which will tend to prevent the lessee or purchaser from dealing with competitors of the lessor or seller, is applicable to a continuing contract of lease, although made before its passage.

[Ed. Note.—For other cases, see Monopolies, Cent. Dig. § 9; Dec. Dig. ⟹10.]

In Equity. Suit by the United States against the United Shoe Machinery Company and others. On application for preliminary injunction. Granted.

Arthur L. Oliver, U. S. Atty., of St. Louis, Mo., C. J. Smyth and H. La Rue Brown, Sp. Assts. Atty. Gen., for the United States.

C. A. Severance, of St. Paul, Minn., and Chester H. Krum, of St. Louis, Mo. (Douglas Robert, of St. Louis, Mo., and Fish, Richardson, Herrick & Neave, of Boston, Mass., on the brief), for defendants.

DYER, District Judge. The plaintiff filed its bill of complaint against the defendants, and therein prays, among other things, that a preliminary injunction be granted restraining the defendants and each of them from directly or indirectly enforcing, threatening, or attempting to enforce certain clauses of the leases particularly referred to

---

⟹For other cases see same topic & KEY-NUMBER in all Key-Numbered Digests & Indexes

in the bill. Upon the hearing of this application the court was favored by long and able arguments, to which it listened with attention and interest. The court was further favored by written arguments and briefs, to which it has also given consideration.

I recognize to the fullest extent, and heartily approve, the principles expressed in the opinion of the Supreme Court of the United States in Truly v. Wanzer, 5 How. 141, 12 L. Ed. 88, to wit:

"There is no power, the exercise of which is more delicate, which requires greater caution, deliberation, and sound discretion, or more dangerous in a doubtful case, than the issuing of an injunction."

In the light of that announcement, let us see what is now before the court.

[1] By an act of Congress approved October 15, 1914, commonly called or known as the "Clayton Act," it was provided, among other things, as follows:

"Sec. 3. That it shall be unlawful for any person engaged in commerce, in the course of such commerce, to lease or make a sale or contract for sale of goods, wares, merchandise, machinery, supplies, or other commodities, whether patented or unpatented, for use, consumption or resale within the United States or any territory thereof, or the District of Columbia, or any insular possession or other place under the jurisdiction of the United States, or fix a price charged therefor, or discount from, or rebate upon, such price, on the condition, agreement or understanding that the lessee or purchaser thereof shall not use or deal in the goods, wares, merchandise, machinery, supplies or other commodities of a competitor or competitors of the lessor or seller, where the effect of such lease, sale, or contract for sale or such condition, agreement or understanding may be to substantially lessen competition or tend to create a monopoly in any line of commerce."

The bill in this case states: That nearly all of the shoes made in the United States are manufactured by machinery, 98 per cent. of which machinery is made and controlled by these defendants. That over 1,500 manufacturers of shoes by machinery are engaged in business throughout the United States, and make and put out annually 300,000,000 pairs of machine made shoes, and that with all but a few of the manufacturers the defendants have business relations. The defendants, it is averred, devote themselves particularly to the production of machinery used in preparing and attaching the soles to the uppers of shoes, but they do not manufacture machinery used in stitching together the uppers. Some of the machines made by the defendants are designated by them as "principal," while others are designated "auxiliary." The bill avers that important machines are put out by the defendants upon leases. On some of the machines the lessee is required to pay a royalty; on others, an annual rental. The "principal" machines cannot be operated profitably without the use of some, if not all, of the "auxiliary" machines, and the latter are of no practical value, except as they are used in connection with the "principal" machines. The bill further avers that the writings under which the defendants put out most of their machinery are designated "Order and Temporary Loan Agreement," "Lease and License Agreement," or "Agreement"; but each and all of them are referred to as leases. These leases run for a period of 17 years, and some of them were

made before and some after the passage of the act of October 15, 1914, commonly called the Clayton Act.

No complaint is made of the leases as a whole. Complaint is made only as to certain clauses therein. No relief is sought against the lessees. The clauses complained against are called in the bill "tying clauses." These clauses are Exhibits 1, 2, 3, 4, 5, 6, 7, and 8, and are as follows:

"(1) Shall not use the machine in the manufacture or preparation of footwear *which has not had certain essential operations performed upon it by other machines leased from the lessor.*

"(2) Shall use the leased machine to its fullest capacity.

"(3) Shall use *exclusively* the leased machine for the class of work for which it is designed.

"(4) Shall obtain from the lessor *exclusively*, at such price as *it* may establish, all duplicate parts and mechanisms needed in operating the leased machines and *all supplies* in connection with them.

"(5) Shall use patented insoles made on *defendants' machinery only* in connection with certain footwear manufactured by machinery leased from the lessor.

"(6) Shall lease from the lessor any additional machinery which he may need for work in the same department as that of the machine leased.

"(7) Shall permit the *lessor* to *determine* whether the lessee has in his factory more machinery adapted for doing the same work than he needs, and, if so, *to remove such machines as, in the opinion of the lessor*, are unnecessary.

"(8) Shall, at the *election of the lessor*, suffer a termination of all leases which he may have and the removal of all machines leased by him from the defendants, in the event of the violation of any term of any one of the leases."

The question then is: Are the clauses inserted in and forming parts of the contracts between the defendants and their lessees prohibited by the act of Congress heretofore referred to. Reading this act of Congress and the clauses complained of together, there can be but one conclusion, and that is that all of the clauses (with the possible exception of No. 2) complained of in the bill are clearly violative of the plain words of the statute.

If the court were in doubt as to the meaning of the act and of the intention of Congress in enacting it, that doubt would be readily removed by reading and considering the proceedings in both houses of Congress touching the purpose of the law. In reference to section 3 of that act, the judiciary committee of the House made a report in which appears the following:

"Where the concern making these contracts is already great and powerful, such as the United Shoe Machinery Company, the American Tobacco Company, and the General Film Company, the exclusive or 'tying' contract made with local dealers becomes one of the greatest agencies and instrumentalities of monopoly ever devised by the brain of man. It completely shuts out competitors, not only from trade in which they are engaged already, but from the opportunities to build up trade in any community where these great and powerful conditions are appearing under this system and practice. By this method and practice the Shoe Machinery Company has built up a monopoly that owns and controls the entire machinery now used by all great shoe manufacturing houses of the United States. No independent manufacturer of shoe machines has the slightest opportunity to build up any considerable trade in this country while this condition obtains. If the manufacturer, who is using machines of the Shoe Machinery Company, were to purchase and place a machine manufactured by an independent company in his establishment, the Shoe Machinery Company could, under its contracts, withdraw all of its machinery

from the establishment of the shoe manufacturer and thereby wreck the business of the manufacturer. * * * Again: If the transaction results in completely driving out competitive articles from the community, as the contract by its terms takes them out of the business of the local dealer, there can be little room to question the contention of the advocates of this system that both the manufacturer and the dealer are benefited by the transaction. If, on the contrary, the local merchant who has tied his hands by an exclusive contract cannot drive out of the community competitive articles, and thereby secure a monopoly of the trade in his immediate locality, it is manifest that he has been seriously hampered and injured in his business by the restrictions placed upon him by his contract. Again: What is the motive and purpose of the manufacturer in making or entering into such exclusive contracts? It is undoubtedly his purpose to drive out competition and to establish a monopoly in the sale of the commodities in that particular community or locality. His contract by its express terms completely shuts out competition in the business of the local dealer with whom he makes it. The dealer bound by this exclusive contract not to handle the goods, wares, and merchandise of another becomes an ally of the manufacturer in his efforts and purpose to drive out competition in the locality or community in which such commodities are sold."

There can be no question but that the act of Congress was aimed directly at the defendant the Shoe Machinery Company.

[2] It is insisted by counsel for defendants that the act can only apply to leases made after the act took effect. A satisfactory answer to this contention, I think, is made by the District Court of the United States for the Western District of Michigan in the case of Elliott Machine Co. v. Albert M. Center, 227 Fed. 124. In that case the court said:

"However, the principal question argued at the hearing of this motion to dismiss was that of the application and effect of the Clayton Act to and upon the contract between these parties which was made and entered into prior to the congressional enactment. In this discussion of the question counsel for both parties have assumed that the contract is single, and also that it is one which, if made at the present time, would fall within the ban of section 3 of the act. Counsel for defendant earnestly insist that, even if Congress so intended, the statute cannot be construed to apply to pre-existing contracts, and to prohibit their performance and enforcement, without violating fundamental and constitutional rights. The statute does not in terms except from its operation any agreements or contracts, past, present, or future, and in the absence of such exception it is to be presumed that Congress intended to prohibit, not only the making of future contracts, but also the further performance of past contracts of the kind specified. Congress derives its power to enact such legislation from the commerce clause of the Constitution, and the power so conferred is broad, comprehensive, and all-embracing. All persons entering into contracts involving interstate commerce must do so subject to the right of Congress thereafter to control, regulate, and prohibit the performance thereof. 'Every owner of property holds the same subject to such action as the sovereign power of the state may, in the exercise of its legitimate sovereignty, adopt in relation to it.' It is now too well settled to admit of controversy that a contract to do a thing, lawful when made, may be avoided by subsequent legislation making it unlawful, and that an act of Congress may lawfully affect the rights which had their inception before its passage."

Counsel here contend that, if an injunction as prayed for in the bill be granted, irreparable damage will be done, not only to the defendants, but to each and every one of the hundreds of those manufacturers in the United States who are lessees of the defendants. Even if this be true, the court should not hesitate to declare the law,

whatever the result to the defendants and their lessees may be. If the course adopted and practiced by the defendants has had the effect to stifle competition and create a monopoly, then the law should be enforced, even if it resulted in going back to the awl and wooden peg. The continuing of the business as heretofore practiced by the defendants and its lessees might and probably would further enrich them, but this would be done at the expense of the men, women, and children who, by reason of the monopoly, are forced to buy shoes from such lessees and manufacturers. The high prices paid by manufacturers for the use of defendants' machines, "principal" and "auxiliary," fall eventually upon those who wear the shoes. It is in the interest of and for the benefit of those that the law was enacted. It is hard to see how the ingenuity of man could have devised a scheme that would more effectually create a monopoly than the scheme set forth in the bill in this case.

After fully considering the verified bill, and the affidavits filed in support thereof, as well as the affidavits presented and filed by the defendants in opposition, the court has reached the conclusion that the temporary injunction prayed for in the bill should be granted; and it is so ordered.

In re ATWATER.

(District Court, S. D. New York. October 20, 1915.)

BANKRUPTCY ⟹136—JURISDICTION OF REFEREE—ORDER REQUIRING BANKRUPT TO TURN OVER PROPERTY.

A referee is without jurisdiction to make an order requiring a bankrupt to turn over property to his trustee, except in proceedings therefor in which the bankrupt is given notice and an opportunity to defend.

[Ed. Note.—For other cases, see Bankruptcy, Cent. Dig. §§ 233, 235; Dec. Dig. ⟹136.]

In Bankruptcy. On application of William B. Atwater, bankrupt, for writ of habeas corpus. Writ granted.

Earl H. Houghtaling, of Walden, N. Y., for bankrupt.
Reeve Ketcham, of Newburgh, N. Y., for trustee.

AUGUSTUS N. HAND, District Judge. The bankrupt has already made various applications to this court for discharge from imprisonment under an order adjudging him in contempt for failure to turn over property to the trustee. All the prior applications have proceeded upon the assumption that the referee had jurisdiction to make the order requiring the bankrupt to pay over to the trustee the property which he was charged with withholding. There was no formal proceeding against the bankrupt to compel him to turn over property, and the testimony which was taken was all offered and received at the first meeting of creditors. The bankrupt was both examined by the solicitor for the trustee and cross-examined by his own solicitor. He also was allowed to call witnesses on his own

behalf to show that he was not secreting property. It is not clear, however, from the examination of the record before the referee, that the bankrupt was ever apprised of the fact that a motion would be made for an order directing him to turn over property to the trustee, nor does it even appear by the record that any such motion was ever made.

After the testimony was closed, without either formal pleadings defining the issue which should ordinarily be had, or even a motion which the bankrupt, or his solicitor, might know the purpose of, and resist, the referee made an order adjudging that $5,000 still remained in the possession or under the control of the bankrupt, and requiring him to pay over the same to the trustee. This order was reviewed by Judge Hough, but the review was limited, under the objections raised to the order, to the consideration of whether or not the evidence before the referee showed that the bankrupt was accountable for $5,000 to the trustee, and no one has ever before raised the question as to the jurisdiction of the referee to make the order.

It is certainly the duty of this court so far as possible to deal with the real substance and not the mere form of proceedings before it. Although I do not approve of the general practice of making orders like the one under consideration without a petition defining the relief sought, I should uphold the order, were it not for the fact that I can find no evidence in the record that the bankrupt was ever apprised of the purpose of the examination conducted before the referee. He may have known its purpose; but, as the bankrupt's liberty is involved, I feel that there should be indisputable evidence that he fully understood the immediate purpose of the investigation before the referee, and did not consider it a mere general investigation, which might result in some future proceedings to turn over property. I think he was entitled to know, either from a formal petition asking that he turn over property, or from a motion made at the hearing before the referee for an order directing him to turn over property, that the inquiry was for the purpose of obtaining such an order. If he had had such information, it is at least possible that he would have introduced further evidence, and that the referee would have reached a different result.

The record shows, and Judge Hough informs me, that he has never had before him for consideration the question of the jurisdiction of the referee to make the order. The bankrupt did not in my opinion, by seeking to review the order on the merits, waive his right to object to the jurisdiction of the court to make it. The writ of habeas corpus should be sustained, on the ground that the referee never acquired jurisdiction to make the original order, and the prisoner should be discharged. This result is in accordance with the decision of Judge Sanborn in the Circuit Court of Appeals in the well-considered case of In re Rosser, 101 Fed. 562, 41 C. C. A. 497.

FERGUSON et al. v. OMAHA & S. W. R. CO. et al.

(Circuit Court of Appeals, Eighth Circuit. September 13, 1915.)

No. 4407.

1. COURTS ⟹385—CIRCUIT COURT OF APPEALS—JURISDICTION—CASES INVOLVING JURISDICTION OF LOWER COURT.

It is only when the jurisdiction of a District Court as a federal court is involved that an appeal or writ of error lies direct to the Supreme Court, under Judicial Code (Act March 3, 1911, c. 231), § 238, 36 Stat. 1157 (Comp. St. 1913, § 1215). A decree dismissing a bill for want of jurisdiction in equity is reviewable by the Circuit Court of Appeals.

[Ed. Note.—For other cases, see Courts, Cent. Dig. §§ 1022–1025, 1031; Dec. Dig. ⟹385.

Jurisdiction of Circuit Court of Appeals in general, see notes to Law Ow Bew v. United States, 1 C. C. A. 6; United States Freehold Land & Emigration Co. v. Gallegos, 32 C. C. A. 475.]

2. COURTS ⟹264—JURISDICTION OF FEDERAL COURT—ANCILLARY SUIT.

An ancillary suit may in a general way be defined as a suit or proceeding in equity growing out of a prior suit in the same court, dependent upon and instituted for the purpose either of impeaching or enforcing the judgment or decree in the prior suit, to the end that more complete justice may be done among all parties in interest; and the jurisdiction of such suit by a federal court is dependent upon the jurisdiction of the court of the prior suit.

[Ed. Note.—For other cases, see Courts, Cent. Dig. § 801; Dec. Dig. ⟹264.]

3. COURTS ⟹264—JURISDICTION OF FEDERAL COURT—ANCILLARY SUIT.

Where, pending a suit in a federal court to foreclose a mortgage, the mortgagor undertook to convey certain rights in the land to third persons, who asserted such rights after foreclosure decree and sale, a bill by the mortgagee, who was the purchaser, filed in the same court, bringing in such third persons to have their rights adjudicated and declared subject to the decree, is ancillary, and as such within the jurisdiction of the court.

[Ed. Note.—For other cases, see Courts, Cent. Dig. § 801; Dec. Dig. ⟹264.]

4. APPEAL AND ERROR ⟹895—DISPOSITION OF CAUSE—ENTERING FINAL DECREE.

When the entire record of a cause, including all the evidence therein, is before an appellate court upon an appeal in equity, such appellate court may consider the case on the merits, and either enter a final decree or remand the cause to the lower court with direction to do so, though the lower court has not considered the merits.

[Ed. Note.—For other cases, see Appeal and Error, Cent. Dig. §§ 3645 3648; Dec. Dig. ⟹895.]

5. CONTRACTS ⟹143—CONSTRUCTION—GENERAL RULES.

It is a fundamental rule that all contracts are to be construed with reference to their subject-matter and the situation of the parties at the time of their making.

[Ed. Note.—For other cases, see Contracts, Cent. Dig. §§ 723, 743; Dec. Dig. ⟹143.]

6. COVENANTS ⟹79—RIGHT OF WAY DEED—AGREEMENT TO MAINTAIN WAGON ROAD—RIGHT TO SPECIFIC PERFORMANCE.

The owner of a large tract of land bordering on the Missouri river conveyed to a railroad company a right of way over a strip of land lying between the river and a high bluff; the deed expressly providing that

the company should "make and keep in repair a wagon road parallel with the track of the railroad and two permanent crossings over the tracks for teams at points to be designated by the grantor." On account of the bluff such road constituted the only means by which the grantor could pass from one part of his land to another. *Held*, that such reservation and agreement were in the nature of a covenant running with the land, that the railroad company was not relieved from performance of the agreement by the fact that by ordinary action of the waters of the river a portion of its right of way had been damaged or washed away, but not to such extent that it could not be repaired and protected against further injury, and that the successors in title to the grantor were entitled to a specific performance of the contract.

[Ed. Note.—For other cases, see Covenants, Cent. Dig. §§ 79–82; Dec. Dig. ⟹79.]

Appeal from the District Court of the United States for the District of Nebraska; Thomas C. Munger, Judge.

Suit in equity by Smith F. Ferguson, as executor of the will of Everard D. Ferguson, deceased, and others, against Omaha & Southwestern Railroad Company and another. Decree for defendants, and complainants appeal. Reversed.

The bill of complaint was filed February 28, 1907, in the District (then Circuit) Court of the United States for the District of Nebraska by the appellants, Smith F. Ferguson, as executor of the last will and testament of Everard D. Ferguson, deceased, and Smith F. Ferguson and Hortense E. Childs, as sole devisees under said will, against the appellees, the Omaha & Southwestern Railroad Company, a Nebraska corporation, and the Chicago, Burlington & Quincy Railway Company, its lessee, an Illinois corporation, to determine their rights, if any, in certain real estate in Sarpy county, Neb., acquired by Everard D. Ferguson, February 26, 1904, under a decree of foreclosure of certain mortgages upon the premises in favor of Everard D. Ferguson in a suit commenced in said court by him against Charles Childs and others in January, 1900. The defendant railroad companies in this suit were not parties to the original suit or bill; but it is alleged in the present bill that they have acquired some interest in or rights to a portion of the premises included in the mortgages foreclosed in the foreclosure suit while it was pending in the Circuit Court; and this bill is filed as ancillary to said original suit to determine the interests and rights of the defendants herein to said premises and declare them to be inferior to the rights of the plaintiffs, and to enforce said decree of foreclosure against these defendants. The defendants answered the present bill, and testimony was taken by both parties upon the merits, and upon final hearing the suit was dismissed "for want of jurisdiction," and the plaintiffs appeal. Other facts essential to a determination of the questions presented will be stated in the course of the opinion.

Francis A. Brogan, of Omaha, Neb. (Anan Raymond, of Omaha, Neb., on the brief), for appellants.

Arthur R. Wells, of Omaha, Neb. (Byron Clark and Jesse L. Root, both of Omaha, Neb., on the brief), for appellees.

Before ADAMS, Circuit Judge, and TRIEBER and REED, District Judges.

REED, District Judge (after stating the facts as above). The defendants have presented to this court a motion to dismiss the appeal upon the ground as follows:

"The appellees move the court to dismiss this case on the ground that this court has no jurisdiction of the appeal taken therein, for the reason that the jurisdiction of the District Court to hear and determine the cause under the

Constitution and statutes of the United States was in issue in the District Court, and that court entered a decree dismissing the suit for want of such jurisdiction."

The motion rests upon section 5 of the Court of Appeals Act of Congress, approved March 3, 1891 (26 Stat. 827, c. 517), now included in section 238 of the Judicial Code, which reads in this way:

Section 238: "Appeals and writs of error may be taken from the District Courts * * * direct to the Supreme Court in the following cases: In any case in which the jurisdiction of the court is in issue, in which case the question of jurisdiction alone shall be certified to the Supreme Court from the court below for decision. * * * "

Prior to the decision of the Supreme Court in Louisville Trust Co. v. Knott, 191 U. S. 225, 24 Sup. Ct. 119, 48 L. Ed. 159, there was some diversity of opinion in the Circuit Courts as to what "question of jurisdiction" may be certified direct to the Supreme Court under this section upon final determination of the cause. But in that case it was determined by the Supreme Court that the "question of jurisdiction," which, when put in issue and is determined by the lower court, may be certified to the Supreme Court, must be one involving the jurisdiction of that court *as a federal court,* and not merely its general equity jurisdiction and practice applicable to the state as well as to the federal courts. See Bogart v. Southern Pacific Co., 228 U. S. 137, 33 Sup. Ct. 497, 57 L. Ed. 768, and Geneva Furniture Co. v. Karpen Brothers, 238 U. S. 254, 35 Sup. Ct. 788, 59 L. Ed. 1295.

[1] The first question for consideration upon the motion to dismiss therefore is: Was the jurisdiction of the District Court as a federal court distinctly put in issue in that court and determined by it? A correct understanding of the nature of the cause of action is necessary to a determination of this question. The bill alleges, and the proofs show, that on and prior to January 3, 1872, one Charles Childs was the owner and in possession of a large tract of land in Sarpy county, Neb., bordering on the westerly bank of the Missouri river immediately south of the city of Omaha in that state. The defendant Omaha & Southwestern Railroad Company, desiring to construct its railroad upon and over said land, obtained from Childs a right of way deed to a strip of land 100 feet wide over the same on that date (January 3, 1872), which deed contained the following provisos and reservations to the effect:

That in case said railroad company shall permanently abandon the route through said tracts of land, then the same shall revert to and become revested in the said grantor, his heirs or assigns; that the grantor reserves the rock and timber on said strip of land, and may enter thereon and remove the same in a manner not to interfere with the operation of the railroad; also reserves the right to cross the railroad track, and travel with teams or otherwise along the right of way parallel with the tracks; and it is expressly understood "that the grantees are to make and keep in repair a wagon road parallel with the track of the railroad, and two permanent crossings for teams at points to be designated by the grantor, and the grantor reserves the right to make other crossings and use them, not interfering, however, with the operation of the railroad."

The railroad company afterwards constructed its railroad upon said right of way, and a wagon road and two crossings for the use of the grantor at points designated by him, and maintained them for many

years. At the time of making this right of way deed Childs was using all of his lands for farming and other purposes, and at the point where the wagon road and two crossings were reserved there was a narrow passageway between the river and a high bluff fronting thereon, which passageway afforded the only means of passing from one part of the land to the other on either side of the bluff, and the wagon road and crossings were reserved over such passageway and constructed by the railroad company to enable Childs to do so. About March 7, 1895, Childs being still the owner of the land, subject only to said right of way deed, conveyed the same with general covenants of warranty to Everard D. Ferguson, which deed was duly acknowledged and recorded in the office of the proper register of deeds on April 20, 1895, and possession of the land thereunder was delivered to said Ferguson. Said conveyance, though in form an absolute deed, was intended as security only for an indebtedness owing by Childs to Everard D. Ferguson. January 20, 1900, Everard D. Ferguson commenced suit in the Circuit Court of the United States for the District of Nebraska against Childs and others to foreclose such mortgages upon said real estate, and such proceedings were had therein that a decree of foreclosure was rendered in his favor, under which the said real estate was sold and deeded to him by a master in chancery, and such deed and sale were duly approved by that court on February 26, 1904, and Ferguson thereupon became entitled to and continued in possession of said premises, except only to the extent that he was prevented by the railroad companies from using the wagon road, and crossings over the railroad tracks. September 8, 1906, Everard D. Ferguson died testate in the state of New York, where he resided, and by his will left his property to his children, the plaintiff, Smith F. Ferguson, and a daughter, now Hortense E. Childs, and named the plaintiff, Smith F. Ferguson, as executor of his will and trustee of his property during the widowhood of his surviving widow, which will was duly probated in the state of New York, and also in the state of Nebraska, where he left real and personal property to be administered.

Paragraph 5 of the bill alleges:

"That this suit is brought by the complainants for the purpose of enforcing the rights in the said premises which Everard D. Ferguson acquired under the decree of foreclosure, and the sale and master's deed to him pursuant thereto, and is ancillary to the said prior suit, and that this court has jurisdiction to hear the bill of the plaintiffs and grant the relief herein prayed, for the purpose of fully carrying out the decree entered in said former suit."

The answer of the defendants admits the making of the deed of March 7, 1895, by Childs to Everard D. Ferguson, the foreclosure of that deed as a mortgage in the Circuit Court, the sale and deed of the premises by the master to Everard D. Ferguson under said decree, and the confirmation thereof by the Circuit Court; the reservations by Childs in the right of way deed of January 3, 1872; the construction by the railroad company of the wagon road and crossings over the railroad for the use of the grantor in said deed, and the maintenance thereof as alleged in the bill. As to the jurisdiction of the District Court in this case it is alleged in paragraph 5 of the answer as follows:

"Deny that this suit is brought for the purpose of enforcing the rights in the said premises which the said Everard D. Ferguson acquired under the said decree of foreclosure or under the sale made or the master's deed issued pursuant thereto, and deny that this suit is ancillary to said prior suit, and submit whether this court has jurisdiction to hear the bill of your orators or grant the relief prayed for in the bill of complaint for the purpose mentioned in the fifth paragraph of said bill."

Otherwise the jurisdiction of the court is not questioned, nor is the jurisdiction of the Circuit Court to foreclose the mortgage challenged, but is admitted by the answer.

On June 7, 1901, while Everard D. Ferguson was in possession of said real estate, and the use and enjoyment of said wagon road and the crossings over the railroad, and while the foreclosure suit was pending, Childs made to the Omaha & Southwestern Railroad Company a quitclaim deed of a strip of land described by metes and bounds, and as being 100 feet in width, immediately south of the 100 foot right of way granted by the deed of 1872. In said quitclaim Childs also released all rights, privileges, or claims reserved or contracted for in the deed of January 3, 1872, and any right or privilege granted or recognized by the railroad company for use as a wagon road or for any occupancy, use, or easement in any respect; and since such deed the railroad companies have refused to maintain a wagon road upon and along the right of way, and the two crossings over the railroad for the use of Everard D. Ferguson, or his executor and the devisees under his will, thus preventing them from having access from one part of said real estate to other parts thereof. The prayer of the bill is that a further decree be entered by the court defining the rights which Everard D. Ferguson acquired under the decree of foreclosure, and that it be found and determined that the wagon road along said right of way parallel to the railroad and the crossings over the railroad tracks are appurtenant to said lands, and that the title of the plaintiffs in and to all of said real estate be quieted in them as against the claims of the defendants under the quitclaim of June 7, 1901; that the defendants be forever enjoined from interfering with the continued use and enjoyment by plaintiffs of a wagon road along the right of way and crossings over the tracks; that defendants be required to maintain the same for the use and benefit of the plaintiffs; and for other proper equitable relief.

The defendants claim that whatever rights were reserved by Childs in the right of way deed of 1872, or recognized by the railroads thereafter, were personal to Childs, and were released and relinquished by the deed of June 7, 1901. Some other matters are also urged that go to the merits, but need not now be stated or considered. The suit by the plain allegations of the bill is intended to foreclose the mortgage of Everard D. Ferguson as against the railroad companies, and determine the title and rights acquired by him under the decree of foreclosure as against their claims under the quitclaim deed of June 7, 1901. Upon the final hearing the District Court entered a decree as follows:

"This cause came on for final hearing on the bill of complaint, the joint and several answer of the defendants, and upon the evidence, was argued by counsel, and upon due consideration thereof by the court it is ordered, adjudged, and decreed that this suit be and is hereby dismissed for want of jurisdiction. To which order the plaintiffs duly except."

This decree fails to state what the lack of jurisdiction was that led to such dismissal, and in granting the appeal of the complainants from such decree no question of jurisdiction "was certified to the Supreme Court." This is not a compliance with section 238 of the Judicial Code. At the time of filing this order for decree, the judge filed a memorandum opinion, which is as follows:

"The jurisdiction of the court to determine this case depends upon the ancillary nature of the suit. A deed of land to a railway company contained a reservation to the grantor of a private way parallel to the railroad right of way and of a crossing at either end of the way, to be maintained by the railway company. This way was so maintained and used for many years. The grantor conveyed his land to the plaintiff's predecessor in title, intending thereby to give security for a debt, and the mortgagee entered into possession, and foreclosed the mortgage by a suit in this court, under which he became the purchaser at the resulting sale. The railway company was not a party to that suit. This suit asks for specific performance of the contract for the private way and crossings, and it is claimed that it is a dependent suit to the foreclosure proceedings; but the suit is against those who were not parties or privies to the original suit, and is not to enforce or carry out the original decree, but is to adjudicate a claim that accrued before the foreclosure proceedings were begun, and which does not depend upon the original suit, but upon the original contract between the parties. Such a suit is an original suit, not ancillary. Dunn v. Clarke, 8 Pet. 1, 8 L. Ed. 845; Stillman v. Combe, 197 U. S. 436, 25 Sup. Ct. 480, 49 L. Ed. 822; Campbell v. Golden Cycle Mining Co., 141 Fed. 610, 73 C. C. A. 260.

"The bill asserts that during the pendency of the foreclosure suit the mortgagor conveyed to the railway company another strip of land, and that the company has since occupied it as the right of way, and prays that title be quieted as to this portion of the land. It is claimed that the court has jurisdiction to grant this relief, and, having jurisdiction thereover, it may proceed to determine all controversies between the parties as to the subject-matter, including the rights under the original agreement stated. It is well settled that as to land long occupied by a railway company for public purposes, such as carrying on traffic, an equitable action seeking to quiet title thereto cannot be maintained, nor will an action in ejectment lie, but the party must seek his compensation in damages in an action at law. Roberts v. Northern Pacific Railroad Co., 158 U. S. 1 [15 Sup. Ct. 756, 39 L. Ed. 873]; Northern Pacific Railroad Co. v. Smith, 171 U. S. 260, 271 [18 Sup. Ct. 794, 43 L. Ed. 157]; Chicago, Burlington & Quincy Railroad Co. v. Englehart, 57 Neb. 444, 77 N. W. 1092; Blakely v. Chicago, Kansas & Nebraska Railway Co., 46 Neb. 272, 281, 64 N. W. 972.

"As the facts set forth do not entitle plaintiff to an equitable action for the relief prayed as to the land conveyed by the later deed, no jurisdiction of the court is shown. 141 Fed. 610, 614, 617, 73 C. C. A. 260. It follows that the court is without jurisdiction to entertain this suit, and it must be dismissed for that reason. An order may be prepared accordingly."

From this it would appear that the suit was dismissed, not for any lack of jurisdiction of the court *as a federal court,* but because in the opinion of the District Court there was no equity in the bill, and that complainants' remedy, if any, was at law for damages. In Smith v. McKay, 161 U. S. 355, 16 Sup. Ct. 490, 40 L. Ed. 731, and Louisville Trust Co. v. Knott, 191 U. S. 255, 24 Sup. Ct. 119, 48 L. Ed. 159, the suits were dismissed for similar reasons, and in each of them an appeal direct to the Supreme Court was dismissed, upon the ground that the jurisdiction of the Circuit Court as a federal court was not involved, and in World's Columbian Exposition v. United States, 56 Fed. 664, 6 C. C. A. 58, where a motion to dismiss an appeal from the Circuit Court

to the Circuit Court of Appeals for like reasons was denied, and the appeal to that court upheld. The answer in this case as to the jurisdiction of the District Court only suggests that the court itself search the record to ascertain if it has jurisdiction of the controversy. This does not put in issue the jurisdiction of the court as a federal court within the meaning of section 238 of the Judicial Code. As the jurisdiction of the District Court as a federal court was not therefore specifically put in issue by the pleadings, or denied by the District Court, its jurisdiction as a federal court is not involved. See Morgan, Warden, etc., v. Ward et al., 224 Fed. 698, — C. C. A. —, filed May 17, 1915. The facts in the cases cited in the memorandum opinion of the District Court, except Dunn v. Clarke, 8 Pet. 1, 8 L. Ed. 845, and Campbell v. Golden Cycle Mining Co., 141 Fed. 610, 73 C. C. A. 260, are such that we deem them inapplicable to the question now under consideration. Reference to the two excepted cases will be made later.

[2, 3] An ancillary bill or suit may, in a general way, be said to be a suit or proceeding in equity growing out of a prior suit in the same court, dependent upon, and instituted for the purpose either of impeaching or enforcing the judgment or decree in the prior suit, to the end that more complete justice may be done among all parties in interest; and the jurisdiction of such a suit is dependent upon the jurisdiction of the court of the prior suit. Minnesota Co. v. St. Paul Co., 2 Wall. 609, 633, 17 L. Ed. 886; Railroad Co. v. Chamberlain, 6 Wall. 748, 18 L. Ed. 859; Freeman v. Howe, 24 How. 450, 16 L. Ed. 749; Krippendorf v. Hyde, 110 U. S. 276, 4 Sup. Ct. 27, 28 L. Ed. 145; Campbell v. Golden Cycle Mining Co., 141 Fed. 610, 73 C. C. A. 260; Brun v. Mann, 151 Fed. 145, 80 C. C. A. 513, 12 L. R. A. (N. S.) 154; Lamb v. Ewing, 54 Fed. 269, 4 C. C. A. 320; Lumley v. Wabash R. R. Co., 76 Fed. 66, 69, 22 C. C. A. 60; Coltrane v. Templeton, 106 Fed. 370, 374, 45 C. C. A. 328; and Lang v. Choctaw O. & G. R. Co., 160 Fed. 355, 87 C. C. A. 307. In Brun v. Mann, 151 Fed. 145, 80 C. C. A. 513, 12 L. R. A. (N. S.) 154, above, this court, speaking by Judge Sanborn, said:

"Diversity of citizenship and the amount in controversy conferred jurisdiction upon the United States Circuit Court to render the original judgment against Tillett for his wrongful seizure and conversion of the cattle. Plenary power to enforce this judgment and to determine every controversy between the parties thereto and their successors in interest which conditioned that enforcement inhered in, and was a necessary part of, its jurisdiction. * * * Nor was the right of the complainant to invoke this jurisdiction conditioned by the existence of a federal question or of diversity of citizenship or of the amount in controversy. A bill in equity dependent upon a former action of which the federal court had jurisdiction may be maintained, in the absence of either of these attributes: (1) To aid, enjoin, or regulate the original suit; (2) to restrain, avoid, explain, or enforce the judgment or decree therein; or (3) to enforce or obtain an adjudication of liens upon, or claims to property in the custody of the court in the original suit. Such a dependent suit is but a continuation in a court of equity of the original suit, to the end that more complete justice may be done."

And in Campbell v. Golden Cycle Mining Co., 141 Fed. 610, 73 C. C. A. 260, he said:

"A bill to construe orders and decrees in a former suit in equity is a dependent bill, and may be sustained against those who claim under, or are

interested in, the orders or decrees whose interpretation is sought"—citing many cases.

And see 2 Street's Fed. Eq. § 1228 et seq.

Because the facts in Campbell v. Golden Cycle Mining Co. were held not to come fully within the rules announced therein is no reason why they should not be observed in a case that does.

In Freeman v. Howe et al., 24 How. 450, the court, at page 460 (16 L. Ed. 749), said of Dunn v. Clarke, 8 Pet. 1, 8 L. Ed. 845, that:

It "deserves, perhaps, a word of explanation. It would seem, from a remark in the opinion, that the power of the court upon the bill was limited to a case between the parties to the original suit. This was probably not intended, as any party may file the bill whose interests are affected by the suit at law."

And the Supreme Court has many times so held in later cases. Dunn v. Clarke does not, therefore, hold that the failure to allege or show the citizenship of the parties to this suit is fatal to the jurisdiction of the District Court, if that was or is the purpose of citing it.

The defendant railroad companies were not made parties to the foreclosure suit for the reason (probably) that when it was commenced they were not disputing the right of either Childs or Ferguson to the use of the wagon road along the right of way, and the crossings over the railroad, as they had been maintaining both for many years; but while that suit was pending, and on June 7, 1901, the defendant Omaha & Southwestern Railroad Company obtained from Childs a release of his rights under the right of way deed of 1872, and also a quitclaim deed to a strip of land 100 feet wide immediately south of the original right of way, upon which it reconstructed or rebuilt its railroad, closed the crossings over the tracks, and denied to Ferguson, the executors of his will, and the devisees thereunder the right to use the wagon road and the crossings, and thus prevented them from passing from one part of their lands to other parts thereof. As the rights so claimed by the railroad companies were acquired by them subsequent to the Ferguson mortgage and while the foreclosure suit was pending, Ferguson in his lifetime might undoubtedly have brought the defendants into that suit by supplemental bill and had their rights under the deed of June, 1901, adjudicated and determined therein. The plaintiffs, as the successors in interest in his estate, may by this proceeding have the defendants' rights under that deed determined and adjudicated upon the merits; and this is what is sought by the present suit. That it is ancillary to and a continuation of the foreclosure suit we have no doubt. The court below therefore erred in dismissing the suit for the alleged want of jurisdiction to determine the controversy, and in refusing to determine the case upon the merits. Its decree must therefore be reversed.

[4] The appellants ask, in the event that this court shall sustain the appeal, that it then consider and determine the case upon the merits, though the lower court did not do so. When the entire record of a cause, including all the testimony therein, is before an appellate court upon appeal in equity, such appellate court may consider the

case upon the merits, and either enter a final decree, or remand the cause to the lower court, with directions to do so, though the lower court has not considered the merits. This case is of that character. It was commenced in the court below in February, 1907. Testimony upon the merits was taken by both parties, all of which is in the record before us, and there is but little dispute therein. The merits have been fully argued before us by the counsel for the respective parties, and there appears to be no reason why we should not determine the case upon its merits and finally dispose of it; for to remand the cause to the court below to determine the merits would only further prolong this litigation unnecessarily. The case is unlike Railway Co. v. Tompkins, 176 U. S. 167, 20 Sup. Ct. 336, 44 L. Ed. 417, and like cases. The case will therefore be determined upon its merits.

The testimony shows that a small portion of the right of way of the railroad under the deed of 1872, upon which the wagon road was constructed and maintained by the railroad company for many years, was washed away one or more times by the ordinary action of the waters of the Missouri river, and restored by the railroad company prior to about 1899. It was again washed away about that year, and the railroad company then instituted condemnation proceedings under the Nebraska statute against Childs and Everard D. Ferguson for an enlargement of its right of way, so as to enable it to remove the railroad tracks nearer to the base of the bluff at the point in question; but upon acquiring its quitclaim deed from Childs in June, 1901, it discontinued the condemnation proceedings, reconstructed its roadbed, and laid its tracks thereon a few feet nearer to the bluff, and then refused to restore the wagon road and the two crossings over the tracks at each end of what had been such wagon road, and its contention, among others, is that, inasmuch as the ground at one point over which the wagon road was constructed has been washed away by the action of the waters of the river, it is relieved from rebuilding and maintaining the wagon road and the crossings over the tracks for the benefit of Childs and his grantees, upon the principle that, under a contract which by the intention of the parties requires for its performance the continued existence of a specific subject-matter, the destruction in toto of that subject-matter will relieve from the performance of the contract, unless the parties have assumed by the contract the risk of its destruction, or one of them has undertaken therein for its continued existence. Many cases are cited in support of this contention, one of which mainly relied upon is Waite v. O'Neil et al. (Sixth Circuit Court of Appeals) 76 Fed. 408, 22 C. C. A. 248, 34 L. R. A. 550.

We think the principle of this and others of the cited cases is inapplicable to the facts of the case before us. In that case Mrs. Waite, the complainant, was the owner of certain lots in the city of Memphis, Tenn., fronting upon the Mississippi river. These lots, or rather the river front and landing in front of them, she leased to O'Neil & Co. for a term of years at a specified rental. The subject-matter of the lease is described in the record as "the river front and landing in front of certain described lots, in the city of South Mem-

phis, with ample space for a roadway along the landing in all stages of the water and no more," the said landing to be used by the lessee for the mooring, storing and unloading of coal, wood, and ice barges or boats. The rent was paid by the lessee to a certain date, when the landing was totally destroyed by the giving way of certain government works across the river from and above Memphis, whereby an unusual and uncontrollable current of water was thrown directly against the river bank in front of Mrs. Waite's property abutting upon the river, and the places contiguous thereto above and below such landing, thus destroying completely the landing which was the subject-matter of the lease. The lessees refused to pay the rent after the destruction of the property, and the suit was brought to recover the unpaid rental and to require the lessees to perform their undertaking in the lease to return the property to Mrs. Waite at the end of the term in as good condition as it was when the lease was made. It was held by the Court of Appeals that this destruction of the subject-matter of the lease by this unusual and uncontrollable action of the waters of the river relieved the lessees from the payment of the rent after the destruction of the property, and that the restoration of the property to its condition at the time of the lease was impossible, owing to the irreparable nature of the damages caused by the action of the waters. This short abridgment or statement of the facts shows the inapplicability, we think, of that case upon its facts to the case before us.

[5] It is a fundamental rule in the construction of all contracts that they are to be construed in reference to their subject-matter, the situation of the parties, and of the subject-matter of the contract at the time of their making. Nash v. Towne, 5 Wall. 689, 18 L. Ed. 527; Canal Co. v. Hill, 15 Wall. 94, 21 L. Ed. 64; Merriam v. United States, 107 U. S. 437, 2 Sup. Ct. 536, 27 L. Ed. 531; United States v. Appleton, 1 Sumn. 492 [24 Fed. Cas. No. 14,463].

[6] In the case before us Charles Childs was, in 1872, the owner of a tract of land, some 800 acres, bordering upon the westerly bank of the Missouri river, south of Omaha, Neb. This tract of land was used by him as a whole, though it was divided or separated by a steep bluff near the river bank, rising abruptly 100 feet or more above the river and extending back from the river for some distance, thus dividing the land into two parts. At the base of this bluff was a narrow strip of land extending a quarter of a mile or so along the bluff between it and the river, which afforded Childs the only means of access from his land on one side of the bluff to that upon the other side. The Omaha & Southwestern Railroad Company, desiring to run its railroad through this land and along the river bank at the base of this bluff, obtained from Childs in January, 1872, the right of way deed of that date, to which reference has hereinbefore been made, and subsequently built its railroad upon that right of way along the base of this bluff, and has since maintained the same at such point, thus occupying with its railroad and tracks the only means whereby Childs and his grantee, Ferguson, and these plaintiffs, as the heirs of Ferguson, may pass from one part of their land to other parts thereof.

This deed of 1872 contains the provisions and reservations hereinbefore set forth, among which is that, if the railroad company shall permanently abandon the route through said tract of land, then the right of way granted shall revert to and become revested in the said grantor, his heirs or assigns; that the grantor reserves the right to cross the railroad track and travel with teams or otherwise along the right of way parallel with the tracks; and finally it is expressly agreed:

"That the grantees are to make and keep in repair a wagon road parallel with the tracks of the railroad, and two permanent crossings over the tracks for teams at points to be designated by the grantor, and the grantor reserves the right to make other crossings and use them, not interfering, however, with the operation of the railroad."

There is no doubt that the reservations in this deed, and the agreement therein of the railroad company "to build and keep in repair a wagon road along the right of way, and two permanent crossings over the tracks" at points to be designated by Childs, were a part of the consideration for that deed, and the principal inducement for its execution, and that such reservations and the agreement of the railroad company are appurtenant to the land of Childs, in the nature of covenants running with the land which inure to the benefit of Childs' grantees upon the conveyance of the land by him, and bind the railroad company to build and maintain the wagon road and the two crossings over the tracks for the benefit of Childs' grantees. Smith v. Garbe, 86 Neb. 91, 124 N. W. 921, 136 Am. St. Rep. 674, 20 Ann. Cas. 1209; Ballinger v. Kinney, 87 Neb. 342, 127 N. W. 239; Mitchell v. Weston, 91 Miss. 414, 45 South. 571, 15 L. R. A. (N. S.) 833 and note, 124 Am. St. Rep. 706; People v. Plainfield Road Co., 105 Mich. 9, 62 N. W. 998. And see Sexauer v. Wilson, 136 Iowa, 357, 113 N. W. 941, 14 L. R. A. (N. S.) 185, 15 Ann. Cas. 54, and note. And this is a local rule of property that will ordinarily be observed by the federal courts sitting in Nebraska, unless it should conflict with or impair the efficiency of some provision of the federal Constitution or a federal statute, or some rule of general commercial law, which we do not perceive that it does. Gormley v. Clark, 134 U. S. 338, 348, 10 Sup. Ct. 554, 33 L. Ed. 909, and Hinde v. Vattier, 5 Pet. 398, 401, 8 L. Ed. 168.

Of course the railroad tracks cannot rightly be removed from the right of way, nor the operation of the railroad suspended; but the appellants ask only that the railroad company be required to perform its agreement "to build and maintain a wagon road along the railroad right of way, parallel with its tracks," for the benefit of the appellants, as the heirs of a grantee of Childs; and we perceive nothing in the situation of the parties or in the subject-matter of this contract that will prevent a court of equity from requiring it to do so. Having unconditionally contracted to maintain the wagon road along the right of way, and two crossings over its tracks, it is not relieved from performing its undertaking because a part of its roadbed where the wagon road was constructed has been damaged or washed away by the ordinary action of the waters of the river without its fault; it not having protected itself by its contract against

such damage, which was to be reasonably expected by all who are familiar with the action of the waters of the Missouri river. Dermott v. Jones, 2 Wall. 1, 7, 17 L. Ed. 762; Railway Co. v. Hoyt, 149 U. S. 1, 14, 13 Sup. Ct. 779, 37 L. Ed. 625; Mitchell v. Weston, 91 Miss. 414, 45 South. 571, 15 L. R. A. (N. S.) 833, 124 Am. St. Rep. 706, above. And specific performance of such an undertaking will be decreed in equity. Joy v. City of St. Louis, 138 U. S. 1, 11 Sup. Ct. 243, 34 L. Ed. 843; Union Pacific Co. v. Chicago, etc., Ry. Co., 163 U. S. 564, 600, 16 Sup. Ct. 1173, 41 L. Ed. 265; Gloe v. Railway, 65 Neb. 680, 91 N. W. 547.

In Union Pacific Co. v. Chicago, etc., Railway Co., 163 U. S. at page 600, 16 Sup. Ct. at page 1187 (41 L. Ed. 265), above, the Supreme Court, speaking by Mr. Chief Justice Fuller, said:

"The jurisdiction of courts of equity to decree the specific performance of agreements is of a very ancient date, and rests on the ground of the inadequacy and incompleteness of the remedy at law. Its exercise prevents the intolerable travesty of justice involved in permitting parties to refuse performance of their contracts at pleasure by electing to pay damages for the breach."

And at page 427 in Stuyvesant v. New York City, 11 Paige (N. Y.) 414, Chancellor Walworth states what he regards as the true rule on the subject of decreeing the specific performance of contracts as follows:

"Where, from the nature of the relief sought, performance in specie will alone answer the purposes of justice, this court will compel a specific performance, instead of leaving the complainant to a remedy at law, which is wholly inadequate. The court has jurisdiction, therefore, to compel the specific performance by the defendant of a covenant to do certain specified work, or to make certain improvements or erections upon his own land, for the benefit of the complainant, as the owner of the adjoining property, who has an interest in having such work done or such improvements or erections made, and where the injury to the complainant, from the breach of the covenant, is of such a nature as not to be capable of being adequately compensated in damages."

In Mitchell v. Weston, above, the court said:

"There is a long line of cases, both in England and this country, which settle the proposition that an unconditional express covenant to repair or keep in repair is equivalent to a covenant to rebuild, 'and binds the covenantor to make good any injury which human power can remedy, even if caused by storm, flood, fire, inevitable accident, or the act of a stranger,' and that, while an act of God will excuse the nonperformance of a duty created by law, it will not excuse a duty created by contract"—citing many cases.

In Gloe v. Railway Co., 65 Neb. 680, 91 N. W. 547, the defendant procured from the plaintiff a conveyance of the right of way, covenanting as part consideration therefor to make two under-track crossings to accommodate the plaintiff in the use of his land. The court said:

"It [the railroad company] has used the right of way and constructed its roadbed across the premises. The evidence is conclusive that the roadbed is so constructed that the plaintiff has to drive along the track a mile or more before he can cross it, and then return upon the other side to reach his own premises. Without these under-track crossings, his land is greatly depreciated in value, and he is put to serious inconvenience in working the same. He is irreparably injured in the enjoyment of his property, unless the defendant performs its agreement, and affords him these under-track crossings for which

he contracted in consideration of conveying away his land. Having taken his land and appropriated it to a quasi public use, the court will compel a performance of the agreement that induced the conveyance."

In the case before us the actual value of the land granted as the right of way by the deed of 1872 is small as compared with the damages and inconvenience to the owner of the land, because of dividing his estate into two parts without means of access from one part thereof to the other, and for which adequate compensation would be difficult if not impossible of ascertaining at law. Specific performance of the contract is therefore the only complete remedy. Whether or not the destruction of that portion of the railroad bed at the base of the bluff, where the wagon road was constructed, is within the right of way described in the deed of 1872, may not be entirely clear under the testimony. But we deem this immaterial, for the railroad companies still retain their rights under the deed of 1872, and continue to use at least a part of that right of way for its roadbed at this point, and exclude the plaintiffs from using any part of the strip of land at the base of the bluff as a passageway from one part of their land to other parts thereof; and so long as they do this, they are bound by the express terms of the contract to maintain a wagon road along the base of the bluff, parallel with its tracks, and the two crossings over the same for the benefit of the owners of the land, as it did for many years after building its railroad upon such ground. By a proper retaining wall the railroad company can repair, as it has done before, the small portion of its railroad bed damaged by the ordinary action of the waters, and this it should be required to do, if necessary to perform its undertaking under the deed of 1872.

Some other matters are urged upon us by the railroad companies as a reason for denying the relief asked by the appellants; but, without referring to them in detail, it must suffice to say that we have carefully considered all of them, and reach the conclusion that the plaintiffs are entitled to a decree that the railroad company, or companies, shall be required to restore the wagon road upon the right of way, parallel with the tracks, and two crossings over the same, and maintain them in the future as appurtenant to the plaintiff's land, and for the benefit of the owners thereof.

We do not understand the railroad company to claim that under the quitclaim deed from Childs of June 7, 1901, procured pending the foreclosure proceedings, that it has any additional rights against the appellants, other than it would have under the deed of 1872, for at the time of that deed Everard D. Ferguson was in possession of the land, and the foreclosure suit was pending; but, if it does, we are of the opinion that its claim cannot be upheld.

The decree of the District Court is therefore reversed, and the cause remanded to that court, with directions to enter a decree for the appellants as herein indicated, at the costs of the appellees. It is accordingly so ordered.

Reversed and remanded, with directions.

NATIONAL BANK OF COMMERCE IN ST. LOUIS v. EQUITABLE TRUST CO. OF NEW YORK.

(Circuit Court of Appeals, Eighth Circuit. September 29, 1915. On Petition for Rehearing, November 1, 1915.)

No. 4213.

1. CORPORATIONS ⟹123—PLEDGE OF STOCK—RIGHT TO DIVIDENDS.

A pledgee of corporate shares may recover from the corporation a dividend declared thereon to the extent of his interest, and if the pledgor collects the dividend he holds it as trustee for the pledgee; if collected by a third person having knowledge of the rights of the pledgee, the latter may recover it on the common count for money had and received.

[Ed. Note.—For other cases, see Corporations, Cent. Dig. §§ 481, 491, 507–512, 537, 539–546, 569, 618; Dec. Dig. ⟹123; Pledges, Cent. Dig. §§ 1–194.

Rights and liabilities of pledgee of corporate stock, see note to Frater v. Old Nat. Bank, 42 C. C. A. 135.]

2. MONEY RECEIVED ⟹1—NATURE OF REMEDY—EQUITABLE RIGHT—IMPLIED PROMISE.

A contractual relation between the parties is not necessary to support an action of assumpsit for money had and received, which is based upon an equitable right from which a promise is implied.

[Ed. Note.—For other cases, see Money Received, Cent. Dig. § 1; Dec. Dig. ⟹1.]

3. EQUITY ⟹39—WAIVER OF OBJECTIONS TO JURISDICTION—RETENTION OF JURISDICTION ACQUIRED.

If the jurisdiction of a court of equity is not challenged, and it is rightfully in possession of a cause as it is made by the bill, it will proceed to determine the whole matter in controversy and grant full and complete relief, although the relief granted may be such as is usually had in an action at law.

[Ed. Note.—For other cases, see Equity, Cent. Dig. §§ 104–114; Dec. Dig. ⟹39.]

4. EQUITY ⟹42—JURISDICTION—WAIVER OF OBJECTION.

One who consents to the hearing and submission in equity of a legal cause of action is estopped to thereafter object to the mode of trial.

[Ed. Note.—For other cases, see Equity, Cent. Dig. §§ 119, 120; Dec. Dig. ⟹42.]

5. BANKS AND BANKING ⟹261—NATIONAL BANKS—LIABILITY FOR MONEY RECEIVED UNDER CONTRACT ULTRA VIRES.

A national bank which has received money equitably belonging to another cannot defend against a suit for its recovery on the ground that it was received as an incident of a contract made by the bank which was ultra vires and not enforceable.

[Ed. Note.—For other cases, see Banks and Banking, Cent. Dig. §§ 991–1000; Dec. Dig. ⟹261.]

6. CORPORATIONS ⟹123—PLEDGE—SUIT BY PLEDGEE TO RECOVER DIVIDENDS.

In a suit to recover dividends declared and paid on corporate stock while it was held by complainant as collateral security for a debt of a third person, and received and retained by defendant bank, defendant *held* en-

titled to credit for the amount of interest and partial payments thereafter paid by it on the debt secured.

[Ed. Note.—For other cases, see Corporations, Cent. Dig. §§ 481, 491, 507–512, 537, 539–546, 569, 618; Dec. Dig. ⚷123; Pledges, Cent. Dig. §§ 1–194.]

7. ELECTION OF REMEDIES ⚷14—ACTS CONSTITUTING ELECTION—WAIVER OF TORT.

An action cannot be ex contractu for one purpose and ex delicto for another, and where it is based on the waiver of a tort and an affirmance of a transaction, the waiver is for all purposes of the case.

[Ed. Note.—For other cases, see Election of Remedies, Cent. Dig. § 16; Dec. Dig. ⚷14.]

Appeal from the District Court of the United States for the Eastern District of Missouri; David P. Dyer, Judge.

Suit in equity by the Equitable Trust Company of New York against the National Bank of Commerce in St. Louis. Decree for complainant, and defendant appeals. Reversed.

For opinion below, see 211 Fed. 688.

In the fall of 1906 and for sometime theretofore George E. Nicholson was and had been engaged in the manufacture of cement at Iola, Kansas. He was a man of large affairs and had property then worth about one million dollars. One of his competitors was a New Jersey corporation which owned and operated a plant there, all of its stock being at that time owned by the Iola Portland Cement Company, a corporation of West Virginia. The latter company also owned all of the stock of a Texas corporation, organized for a like purpose, and its plant was then under construction in the latter state. Nicholson feared that the competition and rivalry between the plant in which he was interested and that controlled by the West Virginia company might become disastrous to his interests, and on that account he conceived a plan to acquire a control of the common stock in the West Virginia company, which amounted to 120,000 shares of the par value of $25.00 each; that company had preferred shares outstanding also but holders of those shares did not participate in the management, and profits on them were restricted.

Nicholson ascertained that he could buy 110,330 shares of the common stock at par, that is, for $2,758,250. He could not, by his own efforts, obtain so large a sum, so in the latter part of 1906 he approached Mr. Van Blarcom, president of appellant bank, for the purpose of obtaining the assistance of Van Blarcom and his bank in raising the funds. As the negotiations between Nicholson and Van Blarcom progressed J. W. Perry, then an employé and later an officer of the bank, was brought into the matter for the purpose of having him take both formal and active participation in behalf of the bank. The result of the negotiations is shown by a written contract between Nicholson and Perry of date January 17, 1907, from which it appears (a) that Perry was to purchase the common stock of the West Virginia company, (b) that Nicholson was to pay Perry, upon demand, all sums expended in the purchase and expenses, (c) Perry was to use his best efforts to negotiate for and procure for Nicholson the loan of such money as was necessary to make the purchase, (d) for that purpose Nicholson was to execute in blank "notes and contracts of pledge in such manner and form and conditioned and provisioned as said J. W. Perry, or B. F. Edwards, or the president or cashier of the National Bank of Commerce in St. Louis (all of which said parties are hereinafter referred to as 'said parties or either of them') may require, and to deliver the same to the National Bank of Commerce in St. Louis; and hereby authorizes said parties or either of them to fill up said notes and contracts of pledge in such way, and in such amount, payable at such time and to such

parties, and bearing such rate of interest as said parties or either of them may elect, and does hereby authorize said parties or either of them upon filling up said notes and contracts of pledge, to deliver the same to such party or parties as said parties or either of them may elect, for the purpose of obtaining said loan or loans of money. Said parties or either of them shall have the power, upon maturity of any of such notes to fill up and deliver said renewal notes and contracts of pledge therefor, if they so elect, and for that purpose said George E. Nicholson shall execute or have others execute for him, and deliver to said bank, in like manner as above provided, his collateral notes, and contracts of pledge;" Nicholson further "agrees to deliver to the National Bank of Commerce in St. Louis, at least the sum of Two Million Dollars par value of collateral, and maintain in value the same from time to time, to be satisfactory to said parties or either of them," and "said parties or either of them shall have the power to pledge said collateral or such part thereof for the payment of all or any of said notes, in such part and amount, as in the judgment of said parties or either of them, they may deem best;" (e) all of the common stock so purchased by Perry was to be, and was in fact, transferred to his name, and he was to hold the same in trust until the full amount of all the notes of Nicholson were fully paid; Perry had the power to vote the stock, to pledge or hypothecate it for the purpose of securing the payment of any or all of Nicholson's notes, and to pledge it or hypothecate it to secure any renewal of said note or notes; provided, upon the full payment by either Perry or H. G. Hamilton, of Youngstown, Ohio, or Nicholson, of one-third of the purchase price of said stock, together with such interest thereon as Nicholson may have paid or become liable to pay, less dividends on said stock in the meantime, then said third of the stock so purchased was to be delivered to the party making such payment and transferred on the books, provided said stock had not been sold or disposed of under contract or contract of pledge by the contract authorized, and provided further that any part of said one-third may be withdrawn on the same conditions pro rata.

The contract also gave Perry the power and duty "To collect and receive during said period of time all dividends that may be declared and paid on said stock not disposed of under contract or contracts of pledge, as hereinabove authorized and apply the same to the payment of the principal and interest on said notes, provided to be executed by George E. Nicholson or others for him, and filled up and delivered by said parties or either of them as hereinabove provided, as in the judgment of said parties or either of them may be deemed best." (f) It was further provided that on the payment of all the notes executed by Nicholson, Perry would cause the National Bank of Commerce in St. Louis to deliver to Nicholson all the collateral he had deposited with it for the purpose of securing the payment of the notes; and (g) "The National Bank of Commerce in St. Louis shall have the power at any time to remove as a party hereto and trustee herein, J. W. Perry, and substitute any other party in his stead, upon notice to that effect, in writing, delivered to Mr. George E. Nicholson; and in the event of the death of said J. W. Perry, to appoint a party to succeed him as a party hereto and as trustee herein. In either of said events, said party so appointed by the National Bank of Commerce in lieu of said J. W. Perry, shall succeed to all his rights and duties herein as a party to this agreement and as trustee herein. This provision shall not be construed to make the National Bank of Commerce in St. Louis liable in any respect whatever on account of any obligation or duty assumed by J. W. Perry, either as party or trustee under this contract."

Some two years later the bank under authority given in the contract substituted Tom Randolph, one of its officers, as trustee instead of Perry.

It will be observed that H. G. Hamilton, of Youngstown, Ohio was interested in the contract; but it appears from the proof that he and those associated with him withdrew, the appellant furnishing the money to buy them out, formally taking Nicholson's notes to itself in the manner laid out in the original contract.

The 110,330 shares of common stock were purchased by Perry, Nicholson co-operating with him, in January, 1907, and the $2,758,250 required to pay for the same was obtained from the following:

Bowling Green Trust Company of New York	$ 250,000
National Park Bank, New York	100,000
First National Bank, Kansas City	50,000
Pioneer Trust Company, Kansas City	50,000
National Bank of Commerce, Kansas City	100,000
Commerce Trust Company, Kansas City	100,000
Commonwealth Trust Co., St. Louis	300,000
William Lanyon	500,000
National Bank of Commerce, St. Louis, Appellant	1,308,250

And for the respective sums the notes of Nicholson were given, and as collateral security there went with each note common shares so purchased in the West Virginia company equal in par value to the amount named in the note. As additional collateral other stocks belonging to Nicholson and placed with the Bank of Commerce under the requirements of the contract were distributed among the lenders.

Nicholson's note given to the Bowling Green Trust Company for $250,000 was of date January 22, 1907, payable in six months, and the rights of the Bowling Green Trust Company (and appellee with which it was later merged) as pledgee of the 10,000 shares of common stock in the Iola Portland Cement Company of West Virginia, which it took as collateral security on its note, are the subjects of this litigation. The note was also signed by one Cockerill, who was at the time good for that amount, but he later became insolvent.

Perry induced the Bowling Green Trust Company to make the loan; he went to New York for that purpose as a representative of appellant, with a letter of introduction from Van Blarcom; and when the loan was promised Nicholson's note and the collateral were forwarded by the appellant. Certificates for the shares put up with it stood in the name of Perry, as trustee.

Renewals of the loan were made every six months through the request of appellant and without the personal participation of Nicholson, except, perhaps, the last one or two renewals in which he personally participated. Two payments of $50,000 each were made on the loan by the appellant, one in July, 1909, and one in July, 1910. The last renewal was of date July 25, 1910, for $150,000, and interest on that note has been paid up to July 1, 1911.

The Bowling Green Trust Company was merged with the Equitable Trust Company, appellee, under New York statute in April, 1909, and the last three renewals were payable to the latter company.

On February 6, 1908, a dividend of $6.25 per share was declared on the common stock of the West Virginia company, payable March 10, 1908, and on December 23, 1908, a further dividend on that stock of $12.50 a share was declared payable January 1, 1909. Eleven days prior to the declaration of the last dividend Perry appeared at the office of the Bowling Green Trust Company in New York and requested an exchange of collateral on the indebtedness of Nicholson to that company, and succeeded on that day in obtaining the consent of the trust company to surrender the 10,000 shares of common stock in the West Virginia company and to take in lieu thereof as collateral for that debt 14,000 shares ($25.00 each) of preferred stock in that company then held by appellant, which it had obtained in carrying out the deal under the contract of January 17, 1907, for the benefit of the parties thereto.

Perry returned to St. Louis and on December 23rd, the day the dividend was declared, he transmitted in a letter, which he signed as vice president of appellant, the preferred shares to the Bowling Green Trust Company to be substituted for the 10,000 common shares which it held, and thereafter on December 26th, the trust company surrendered the common shares and sent them to Perry, he acknowledging receipt thereof in a letter of date December 28th, as vice president of appellant.

Van Blarcom's letter of introduction which Perry carried with him to the Bowling Green Trust Company in January, 1907, on his first visit there for the purpose of securing the loan to Nicholson, in referring to Perry's mission,

recited: "We intend to take a large interest in the transaction ourselves and will advance the money on the same securities which he (Perry) will offer to you. Further details will be explained by Mr. Perry."

During Perry's negotiations with the trust company at that time he was asked by the representative of the trust company if the National Bank of Commerce, or some of its officers, would guarantee or endorse the Nicholson note, and he answered that they would not.

The learned District Judge who heard the case below found as a fact that the trust company at the time it surrendered the 10,000 common shares had no knowledge or information that the dividends had been declared; and as there is testimony to support this finding we so accept it. The trust company did not ascertain that fact until long thereafter.

In January, 1907, officers, directors and employés of the bank were made directors of the cement company, and thereafter they constituted a majority of the board, and controlled and directed its affairs, and were members of said board when the dividends were declared. The dividends as declared went into the appellant bank in an account entitled "George E. Nicholson Trustee account," and were checked out and used to apply on various indebtedness incurred in the deal, most all of which was gradually taken over by the bank, including its own original loan, as pressing circumstances in the judgment of the bank from time to time required.

Sometime after appellant obtained the 10,000 shares of common stock from the trust company in exchange as above noted and had gotten all of the other 110,330 shares of common stock into its possession, it realized that it must be rid of them. This was doubtless due to requirements under the National Banking Act, and apparent approaching failure of the entire venture. It still held them as collateral on Nicholson's large indebtedness, and probably also on the indebtedness of the cement company and its subsidiaries. It was able in December, 1909, to make contracts of sale, largely to those interested in the bank, of 73,552 shares at $8.15 per share; but by stipulation it was agreed that only $487,763.71 was realized thereon. The other shares, 36,778, it took over itself at that agreed price; but it was further stipulated that all of these shares so taken by it were later charged off as utterly worthless. The National Bank of Commerce had greatly extended its credit to Nicholson in addition to the original transaction in the purchase of the common stock, in taking up his indebtedness to Hamilton and associates of Youngstown, Ohio, and other claims against him; and had also extended large credits to the cement company and its two subsidiary companies, and later suffered very great losses in all of these transactions. Both Nicholson and the cement companies became wholly insolvent.

The last renewal note given to appellee for $150,000 and interest thereon after July 1, 1911, has not been paid, and the appellee sought in this suit to recover from appellant the amounts of the two extra dividends of twenty-five per cent. and fifty per cent., also four semi-annual dividends of two per cent declared in 1907 and 1908 while the Bowling Green Trust Company held the 10,000 shares, and also the amount realized on those shares on sale of same by appellant, to the extent of its unpaid note and interest thereon. And in January, 1914, decree was entered below in favor of appellee for recovery of $172,800 and execution awarded.

George L. Edwards and Edward D'Arcy, both of St. Louis, Mo. (H. S. Priest, of St. Louis, Mo., on the brief), for appellant.

Charles P. Howland, of New York City, and Frederick N. Judson, of St. Louis, Mo. (John F. Green, of St. Louis, Mo., and George A. Gordon, of New York City, on the brief), for appellee.

Before SANBORN and CARLAND, Circuit Judges, and LEWIS, District Judge.

LEWIS, District Judge (after stating the facts as above). [1] 1. The law which determines the rights of the parties as to the dividends

may be briefly stated: (a) A pledgee of corporate shares may recover from the corporation declaring a dividend thereon such dividend to the extent of the interest of the pledgee under the pledge, Thompson on Corporations, § 2181; Cook on Corporations (4th Ed.) § 468; Gemmell v. Davis, 75 Md. 546, 23 Atl. 1032, 32 Am. St. Rep. 412; Guarantee Co. v. Town Co., 96 Ga. 511, 23 S. E. 503, 51 Am. St. Rep. 150; Bank v. Wilder, 32 Neb. 454, 49 N. W. 369; Bank v. Mosher, 63 Neb. 130, 88 N. W. 552; George, etc., Co. v. Range, etc., Co., 16 Utah, 59, 50 Pac. 630; Gaty v. Holliday, 8 Mo. App. 118, and if the pledgor collects the dividend he holds it as trustee for the pledgee, Jones on Collateral Securities & Pledges (3d Ed.) § 398; (b) and as against a third party receiving the dividend with knowledge, of the rights of the pledgee, the latter may recover on the common count for money had and received.

The first proposition is not seriously doubted, but the second is earnestly denied. We think they are equally sound. The argument on the point is, that assumpsit is not maintainable unless there be, in fact, privity of contract between the parties; and it is said that that relation did not exist between the St. Louis bank and the Bowling Green Trust Company.

[2] We note the general character of the action. In Cary v. Curtis, 3 How. 236, 246 (11 L. Ed. 576) it is said:

"The action of assumpsit for money had and received, it is said by Lord Mansfield, Burr. 1012, Moses v. Macfarlen, will lie in general whenever the defendant has received money which is the property of the plaintiff, and which the defendant is obliged by the ties of natural justice and equity to refund. And by Buller, Justice, in Stratton v. Rastall, 2 T. R. 370, 'that this action has been of late years extended on the principle of its being considered like a bill in equity. And, therefore, in order to recover money in this form of action the party must show that he has equity and conscience on his side, and could recover in a court of equity.' These are the general grounds of the action as given from high authority."

In Gaines v. Miller, 111 U. S. 395, 397, 4 Sup. Ct. 426, 427 (28 L. Ed. 466):

"Whenever one person has in his hands money equitably belonging to another, that other person may recover it by assumpsit for money had and received."

The contention is old and was early repudiated as demonstrated by the note to Mandeville v. Riddle, in Appendix to 1 Cranch, 367, under subd. 4, page 438. For collation of additional authorities see 1 Chitty on Pleadings (16th Am. Ed.) star pages 112, 362 and 363, notes. In Cary v. Curtis, supra, 3 How. 254, 11 L. Ed. 576:

"It is an entire mistake of the true meaning of the rule of the common law, which is sometimes suggested in argument, that the action of assumpsit for money had and received is founded upon a voluntary, express, or implied promise, of the defendant, or that it requires privity between the parties ex contractu to support it."

The rule is aptly stated by Bigelow, Judge, in Brewer v. Dyer, 7 Cush. (Mass.) 337, 340:

"The law, operating on the act of the parties, creates the duty, establishes the privity, and implies the promise and obligation, on which the action is

founded." Leete v. Pacific M. & M. Co. (C. C.) 88 Fed. 957; Bank v. Bank (C. C.) 19 Fed. 301.

The action lies for money which "ex æquo et bono, the defendant ought to refund." Stockett v. Watkins, 2 Gill & J. (Md.) 326, 20 Am. Dec. 438; Norden v. Jones, 33 Wis. 600, 14 Am. Rep. 782; Stimpson v. Insurance Co., 47 Me. 385; Horne v. Mandelbaum, 13 Ill. App. 607.

[3] 2. When it came to the decree it went only for the recovery of a sum certain; and it is assigned as error that plaintiff below went into the wrong forum, that it had a plain, adequate and complete remedy at law, and that consequently there was no jurisdiction in equity over the controversy. As already indicated, the proceeding has been treated here, in brief and argument, as in assumpsit. Of course, if the bill had disclosed that as the true character of the action and there was nothing else in the bill on which equitable relief was appropriately invoked, the trial court would have undoubtedly dismissed the bill had it been challenged on that ground. Gaines v. Miller, 111 U. S. 398, 4 Sup. Ct. 426, 28 L. Ed. 466; and without challenge it should in that event have been dismissed. Oelrichs v. Spain, 15 Wall. 211, 227, 21 L. Ed. 43; Amis v. Myers, 16 How. 492, 14 L. Ed. 1029; Sullivan v. R. R. Co., 94 U. S. 806, 811, 24 L. Ed. 324. But if a court of equity is rightfully in possession of the cause as it is made by the bill, it will proceed to determine the whole matter in controversy and grant full and complete relief, although the relief granted may be such as is usually had in a proceeding at law. Cathcart v. Robinson, 5 Pet. 264, 278, 8 L. Ed. 120.

The bill had a wide scope. True, its ultimate purpose was to have the appellant declared a trustee for the benefit of the complainant of the moneys which it sought to recover. But in many and lengthy paragraphs it sets forth the transactions in which appellant was involved and which it sought to carry out under the contract between Nicholson and Perry of date January 17, 1907; the relations of appellant thenceforth to the cement company and its control of the board of directors of that company and its subsidiary companies which owned the plants in Kansas and Texas, its extensions of credits to the cement company, and its direction of the affairs and business, in general, of that company; fraudulent conduct, as appellee alleges on information and belief, on the part of appellant in relation to, and in conducting the business of, the cement company and its subsidiaries, as well as toward the Bowling Green Trust Company in connection with taking down the 10,000 shares collateral and substituting others, and the fiduciary relations theretofore existing between appellant and the trust company, and attaches interrogatories for the purpose of requiring a disclosure and accounting in relation to the charges made. "Thus (on the face of the bill) there were in the case, as ingredients to support the jurisdiction of equity discovery, account, fraud, misrepresentation and concealment" (Tyler v. Savage, 143 U. S. 79, 95, 12 Sup. Ct. 340, 36 L. Ed. 82), and the fiduciary and trust relations. A court of equity takes cognizance of controversies involving a trust relation, whether it be a resulting one growing out of the relations of the parties and their acts toward each other, or a

constructive one raised and interposed by a court of equity to prevent accomplishment of fraudulent purposes. Hopkins v. Grimshaw, 165 U. S. 342, 358, 17 Sup. Ct. 401, 41 L. Ed. 739; Clews v. Jamieson, 182 U. S. 461, 479, 21 Sup. Ct. 845, 45 L. Ed. 1183.

[4] Moreover, the objection was not made until after answer, trial and submission of the cause to the court, and this court has given a short and direct answer to the contention. "One who consents to the hearing in equity of a legal cause of action, or to the trial of an equitable cause of action at law, is thereby estopped from successfully objecting for the first time in an appellate court to the method of trial which he adopted." Highland Boy G. M. Co. v. Strickley, 116 Fed. 852, 854, 54 C. C. A. 186, 188 and cases there cited. Southern Pacific R. R. Co. v. United States, 200 U. S. 341, 26 Sup. Ct. 296, 50 L. Ed. 507, s. c. 133 Fed. 651, 66 C. C. A. 581; Tyler v. Savage, 143 U. S. 79, 97, 12 Sup. Ct. 340, 36 L. Ed. 82.

[5] 3. One of the defenses set up in the answer was that the contract between Nicholson and Perry, as representing the bank, was an agreement and transaction into which the bank could not enter, that it was ultra vires the bank, and that the bank is not liable for any of its acts under that contract; and this is now relied upon. That this position cannot be maintained, where the proceeding is to recover moneys which have gotten into the hands of the bank but belong to the plaintiff, we need only to call attention to what is said in Louisiana v. Wood, 102 U. S. 294, 299, 26 L. Ed. 153, and Citizens' National Bank v. Appleton, 216 U. S. 196, 30 Sup. Ct. 364, 54 L. Ed. 443.

[6] 4. The appellant was liable for the dividends on the 10,000 shares declared and paid by the cement company and coming into appellant's hands with knowledge of the facts while the shares were held as collateral on the indebtedness to the trust company. Those dividends were as follows: One of twenty-five per cent. declared February 6, 1908, $62,500; one of fifty per cent. declared December 23, 1908, $125,000, and two semi-annual dividends declared in 1907 and two in 1908, each two per cent., $20,000—total, $207,500. Thereafter in July, 1909, the bank remitted the trust company $50,000 as a partial payment on Nicholson's renewed note, and in July, 1910, a like amount, thus reducing the principal to $150,000; and it also paid the interest on the loan up to July 1, 1911. The total interest payments thus made amounted to $57,875, figured at the rate of six per cent, which appears to be the average rate charged. The bill alleges that these partial payments and interest up to July 1, 1911, were made by appellant. The partial payments were made long after all of the dividends on the common stock were declared and received into the bank, and the far greater part of the interest was also paid after those dividends had been declared and received. We see no reason why these payments amounting to $157,875 should not be charged against and taken out of the dividends theretofore turned over to the bank, thus leaving $49,625 of those dividends unaccounted for; and we believe this ought to be done, on which amount appellee was entitled to interest at six per cent. per annum from

January 1, 1909, the day the fifty per cent. dividend was made payable. Even the common count for their recovery is said to be equitable in character. A defendant in such an action is required to account only for what he has actually received of the moneys belonging to the complainant. We are not unmindful of the fact that notwithstanding the allegations of the bill that the payments were made by the appellant, the answer alleges and the proof discloses that before the partial payments were made the appellant went through the form of taking Nicholson's note in each instance for the amount of the payment and then remitted; but looking at substance and not form, it is evident that the moneys so used were put up by the bank, and the same is true of the interest payments.

After the exchange of collateral, the trust company taking 14,000 preferred shares in lieu of the 10,000 common, five semi-annual dividends of three and a half per cent. each were declared and paid on the preferred stock. The first three of these dividends were declared while the trust company held the 14,000 shares in pledge, but when the last two were declared the trust company held only 11,000 of said shares, it having surrendered to the St. Louis bank 3,000 of said shares on July 25, 1910, at the request of the bank. None of these dividends, as such, were paid over by the bank to the trust company. They were as follows: three and a half per cent. on 14,000 (face value $350,000), payable July 2, 1909, $12,250, three and a half per cent, payable January 1, 1910, $12,250, and three and a half per cent, payable July 1, 1910, $12,250, three and half per cent. on the 11,000 (face value $275,000), payable January 1, 1911, $9,625, and three and a half per cent, payable July 1, 1911, $9,625—a total in dividends on the preferred while held by the trust company of $56,000. It is fairly inferable from the proof that all of these dividends were paid into and taken over by the bank and applied by it in the same manner that it used the dividends on the common stock; and while the bill does not make specific claim to them, its general prayer is sufficient for that purpose. The appellee was therefore entitled to recover the dividends declared on the preferred stock while it held it in pledge as collateral security, with six per cent. added thereto from the dates on which they were severally payable.

[7] 5. There is no basis in this action on which recovery of the proceeds on sale of the common stock by appellant can be rested. Neither the appellee nor its predecessor in interest could be said to be the owner of those proceeds when they were taken over by appellant. The sale from which the proceeds arose was made in December, 1909, which was one year after the common stock had been surrendered and delivered back to the pledgor. It is familiar law that the validity of a pledge depends upon its delivery to and continued possession by the pledgee. Jones on Collateral Securities & Pledges (3d Ed.) §§ 23 and 40. In Casey v. Cavaroc, 96 U. S. 467, at page 477 (24 L. Ed. 779), it is said:

"The difference ordinarily recognized between a mortgage and a pledge is, that title is transferred by the former, and possession by the latter. Indeed, possession may be considered as of the very essence of a pledge (* * *); and

if possession be once given up, the pledge, as such, is extinguished." Bidstrup v. Thompson (C. C.) 45 Fed. 452, 454; Thurber v. Oliver (C. C.) 26 Fed. 224; Insurance Co. v. Iron Co. (C. C.) 81 Fed. 439, 445; Pauly v. Loan & Trust Co., 58 Fed. 666, 7 C. C. A. 422; Phelps v. Church, etc., 115 Fed. 882, 53 C. C. A. 407, s. c. 99 Fed. 683, 40 C. C. A. 72.

The trust company was not the owner of the 10,000 common shares and had no interest or special property right in them as pledgee after it delivered them back to the pledgor, and appellee cannot therefore successfully claim that at the time the bank sold the shares and received the proceeds it was disposing of property which belonged to the former. Indeed, we do not understand that any such claim is asserted, but the contention in that respect is that recovery may be had because the shares were obtained from the pledgee through deception and fraud practiced by the pledgor and the bank. That is to say, the tort is not waived but expressly relied upon. An action cannot be ex contractu for one purpose and ex delicto for another. The tort must not only be waived in order to maintain assumpsit, but when waived it is no longer an element in the case, not even in defense, for the defendant could not set it up. Gibson v. Stevens, 3 McLean, 551, Fed. Cas. No. 5401, and citations to the point. And when waived plaintiff's case rests upon ownership or right of property, which must be established. 2 Greenleaf, Ev. (15th Ed.) § 120; Janes v. Buzzard, Hempst. 240, Fed. Cas. No. 7,206a.

But conceding a right and duty to here consider the alleged fraud in taking down the common shares and substituting the preferred, and conceding that such fraud was established, and then giving to it the force and effect which it would be entitled to receive in an action ex delicto, still there would be no ground for recovery, because no damage is shown in that transaction. We cannot assume that the common shares (ex dividends) were more valuable than the preferred at the time of the exchange.

As the amount awarded to the complainant by the decree below exceeded what it was entitled to recover there must be a reversal, with costs to appellant and a remand of the cause with direction to enter a decree for complainant for an amount to be ascertained as pointed out in the opinion of this court.

On Petition for Rehearing.

The motion for rehearing complains of our opinion and conclusions as to two matters, viz.: First, the dividend of $125,000 declared on the ten thousand shares of common stock on the 23rd day of December, 1908, and, second, the five dividends ($56,000) declared on the preferred shares, both of which we held appellee was entitled to receive.

1. As to the first.—The claim is that appellant was entitled to retain the $125,000 dividend on the common stock by reason of the fact that on December 12, 1908, eleven days before that dividend was declared, Perry appeared at the office of the trust company in New York and made the arrangement by which it was agreed that there should be an exchange of collateral; and therefore it is insisted

that dividends declared after that date could not be recovered by appellee. But the exchange was not made at that time, as we pointed out. Perry returned to St. Louis. The ten thousand shares were held by the trust company in New York as a pledge on the Nicholson note until December 26th, three days after the declaration of the dividend. The trust company waited until it received the preferred stock before it surrendered its pledge in the common stock. The preferred shares were forwarded from St. Louis on December 23rd through the mails and by due course reached the trust company at New York prior to its surrender of the ten thousand common shares. On December 26th the trust company sent certificates for the common shares to the bank, and it received them on the 28th of that month.

We also undertook to point out that the right of the pledgee as such in the pledge continues until a surrender of the pledge, and thus we felt there was a secure basis on which the right of appellee to that dividend was rested. We are still of that mind and are not impressed with the relevancy of authorities cited in the brief to the motion, which deal with the relations between vendor and vendee.

2. As to the second.—It is true that arguments and briefs did not direct specific attention to the right of appellee to recover the five dividends declared on the preferred shares while it held them in pledge; and if we now had any impression that appellant seriously denied that these five dividends, or any of them, came into its hands, and stood ready to establish the denial by proof, we would be compelled to say that it is entitled to an opportunity to establish that fact. But we gain no such impression from the motion, brief and argument. Indeed, the position in that respect is evasive. We quote from page 21 of the argument:

> "If these preferred dividends were not paid to and appropriated by appellant, it is not the intention of this Honorable Court to require the appellant to account therefor to appellee. * * * We believe that upon an accounting for this purpose appellant can make clear that it did not receive and appropriate these dividends, certainly not all of them, and but few, if any."

The element of appropriation, as here used, upon which the contention rests, is immaterial. The evident purpose is to inject, as an element of liability, the inquiry whether appellant applied to its own use all of these dividends; whereas it was and is our view that liability, under the authorities cited, turns on the question: Did appellant receive these dividends with knowledge of the rights of the pledgee? At the time all of these dividends were declared, and for a long time theretofore, appellant, through a board of directors selected at its dictation and consisting of its officers and employés (except a small minority), had control of and managed the cement companies, had extended them large credits, had further extended its credit to Nicholson, had these preferred shares as collateral, with other of his stocks, on his indebtedness to it, and had on its book an account, under the requirements of the contract of January, 1907, entitled "George E. Nicholson Trustee Account," into which the dividends on the common shares were required to be put, with

power in Perry or his successor in trust representing the bank to check them out. In short, the bank had absorbed the whole venture and Nicholson had drifted to the position of a mere puppet. It had had these preferred shares up to the time of the exchange as collateral on Nicholson's indebtedness to it, and as the dividends thereafter declared on these preferred shares while the trust company held them were not paid over to the trust company by the cement company, it is not possible to conceive, in the light of the facts, that anyone else than either Nicholson or the bank received them from the cement company. And as it is not claimed that the cement company paid them to Nicholson, we felt, and still feel, that the only possible and reasonable inference is that they went into the hands of the bank; and when it took them, it, of course, did so with full knowledge of the rights of the trust company to have them. It was then liable to the trust company and could not relieve itself from that liability by passing them over to someone else. So that in the light of the record we reached the conclusion that appellant should account for these dividends, and that conclusion has not been shaken by the arguments presented on the motion for rehearing, but rather confirmed.

The motion is therefore overruled.

BYRD v. HALL et al.

(Circuit Court of Appeals, Eighth Circuit. September 7, 1915. Rehearing Denied December 18, 1915.)

No. 4323.

1. FRAUDULENT CONVEYANCES ⟹181—EFFECT AS TO CREDITORS—TITLE TO PROPERTY.

As to creditors a fraudulent conveyance is wholly void, and the legal as well as the equitable title remains in the grantor.

[Ed. Note.—For other cases, see Fraudulent Conveyances, Cent. Dig. §§ 554–559, 561–567; Dec. Dig. ⟹181.]

2. EXECUTORS AND ADMINISTRATORS ⟹329, 388—EFFECT OF DECREE SETTING ASIDE CONVEYANCE BY DECEDENT—JURISDICTION OF PROBATE COURT.

Under Rev. St. Mo. 1879, § 2360, which prohibited the issuance of execution against the property of a deceased person, but provided that a judgment or decree rendered against him in his lifetime should constitute a demand against his estate, to be proceeded on in the probate court, which by other statutory provisions was authorized to sell both personal and real property to pay debts generally, and also to order the sale of real estate on which judgments were liens for the payment of such judgments, where judgment creditors of a decedent obtained a decree setting aside a fraudulent conveyance made by him, the probate court had jurisdiction to order the land sold to pay the judgments, and the administrator's deed made on such sale conveyed a good title as against the fraudulent grantee and his heirs.

[Ed. Note.—For other cases, see Executors and Administrators, Cent. Dig. §§ 1052, 1059, 1342, 1350–1364, 1573–1582; Dec. Dig. ⟹329, 388.

Construction and operation of decree setting aside fraudulent conveyance, see note to Byrd v. Hall, 117 C. C. A. 573.]

⟹For other cases see same topic & KEY-NUMBER in all Key-Numbered Digests & Indexes

3. ADVERSE POSSESSION ⟹86—PAYMENT OF TAXES—STATUTORY PROVISIONS.
Under Rev. St. Mo. 1889, § 6770, which provides that 30 years' lawful possession of real estate shall bar an action for its recovery by an adverse claimant who has not been in possession or paid any taxes thereon during that time, the actual payment of taxes only will defeat the bar of the statute, and an offer to pay is unavailing, when the taxes are in fact paid by the one in possession.

[Ed. Note.—For other cases, see Adverse Possession, Cent. Dig. § 504; Dec. Dig. ⟹86.]

4. ADVERSE POSSESSION ⟹68—"LAWFUL POSSESSION"—COLOR OF TITLE.
"Lawful possession," under Rev. St. Mo. 1889, § 6770, which provides that 30 years' lawful possession of real estate shall bar an action for its recovery, means under color of title.

[Ed. Note.—For other cases, see Adverse Possession, Cent. Dig. §§ 387–393; Dec. Dig. ⟹68.

For other definitions, see Words and Phrases, First and Second Series, Lawful Possession.]

Sanborn, Circuit Judge, dissenting in part.

In Error to the District Court of the United States for the Eastern District of Missouri; David P. Dyer, Judge.

At Law. Action of ejectment by Abraham R. Byrd against George Allen Hall and the Decatur Egg Case Company. Judgment for defendants, and plaintiff brings error. Affirmed.

For opinion below, see 211 Fed. 182. See, also, 196 Fed. 762, 117 C. C. A. 568.

Wilson Cramer, of Jackson, Mo., and R. B. Oliver, Sr., of Cape Girardeau, Mo., for plaintiff in error.

John T. McKay, of Kennett, Mo., and Charles W. Bates, of St. Louis, Mo., for defendants in error.

Before SANBORN and HOOK, Circuit Judges, and AMIDON, District Judge.

AMIDON, District Judge. For convenience of reference we will again briefly state the long story that underlies this case. In May, 1871, William Sugg, "lawyer, merchant, and navigation contractor," was the owner of 20,000 acres of swamp land in Dunklin county, Mo. He was also largely indebted to creditors for goods sold and delivered. Suits were pending upon these debts, and a term of court at which they would pass into judgment was to convene May 29th of that year. On the 27th of May William Sugg executed and delivered a deed of the above-described lands to his brother, Wiley P. Sugg. The Supreme Court of Missouri (St. Francis Mill Co. v. Sugg, 206 Mo. 148, 104 S. W. 45) has found that this deed was executed for the purpose of hindering, delaying, and defrauding creditors, and that both parties to it were willful participants in the fraud. The creditors recovered judgments at the May term of court, which were docketed and became liens upon the lands covered by the deed. William Sugg died before the creditors discovered the property thus fraudulently conveyed. In April, 1875, however, they brought suit against Wiley Sugg to have the fraudulent conveyance canceled as

an obstruction to the collection of their judgments. Before this suit came to trial Wiley Sugg died, and the case was revived against his administrator and heirs. August 20, 1880, a decree was entered, declaring the conveyance to be "fraudulent and void, and that the same be set aside and for naught held as to the plaintiffs herein as creditors of said William S. Sugg," except about 2,000 acres of the lands, "which are, by agreement of the parties herein, excepted and excluded, and said deed is not set aside" as to said 2,000 acres.

A motion for new trial was filed, but was left dormant until January, 1895. The Supreme Court of Missouri, having before it in the case above referred to a much fuller record of the transaction than is now before us, explained the reason why this motion was allowed to lie dormant, in the following language (206 Mo. 148, 104 S. W. 51):

"The trial was had, and the court indicated a judgment for plaintiffs; thereupon this motion for new trial was filed, no doubt accompanied with threats of an appeal. Then it was, in our judgment, that the agreement between counsel to exempt the 2,000 acres occurred, and then came the decree which was written up and entered. This will account for the fact that the motion was permitted to lie dormant so long. * * * We feel satisfied that the agreement was reached after the motion was filed, and the announced judgment of Judge Owen was modified into the decree as entered."

This explanation is consistent with the language of the decree and the conduct of the parties. It shows that the decree was the result of a compromise. The heirs of Wiley P. Sugg have enjoyed the fruits of that compromise. Both under the statute of Missouri against fraudulent conveyances and upon doctrines of equitable estoppel they ought, therefore, to be barred from questioning the application of the remainder of the lands to the satisfaction of the claims of creditors in whose favor that decree was entered. At that time the lands were of little value. In 1895 the value of the lands had greatly increased, and in the meantime the heirs had reached an age when they were interested in their own affairs. The motion was therefore revived and brought on for hearing. It is not necessary for us now to state the repeated trials of the case in the courts of Missouri, and the frequent appeals that were taken. It is sufficient that in July, 1907, the Supreme Court of that state, upon a full examination of the testimony, affirmed the decree. Mill Co. v. Sugg, 206 Mo. 148, 104 S. W. 45.

After the decree of August 20, 1880, was entered, the administrator of William Sugg's estate, at the instance of the judgment creditors, filed a petition in the probate court of Dunklin county, setting forth the recovery of their judgments, the entry of the decree, and the insolvency of the estate, and asking that an order be made for the sale of the lands in question, and that the proceeds, after paying expenses, be applied upon their judgments. The probate court, acting upon this petition, took the regular steps required by law for the sale of the lands. The sale was had, and a deed executed. The defendants here derive their title under that sale. The plaintiffs claim as heirs of Wiley Sugg, either directly or by subsequent conveyance.

For 37 years the plaintiffs here conducted the litigation as defendants which resulted in the final decision against them in the Supreme Court of Missouri above referred to. St. Francis Mill Co. v. Sugg, 206 Mo. 148, 104 S. W. 45. That case was decided in 1907. In 1910 the litigation was given a new lease of life by the present action of ejectment, brought by the defeated parties in the other suit to recover possession of one section of the land. The case has been in this court once before. Byrd v. Hall et al., 196 Fed. 762, 117 C. C. A. 568. On that review we reversed a judgment in favor of the defendants and sent the case back for a new trial. This second trial likewise resulted in a judgment in favor of the defendants, and the plaintiffs bring error.

We will take up the errors complained of in the order in which they are presented by counsel. They assert, first, that the trial court failed to give effect to the law of the case as declared in our former opinion; and, second, that the decision is wrong as matter of law, independently of our opinion.

Upon the first trial the defendants in their answer alleged that the lands were sold under the order of the probate court, on petition of the administrator, and for the purpose of paying all debts proven against the estate. It contained no averments showing that the sale was had at the instance of the judgment creditors who had obtained the decree of August 20, 1880, and for the sole purpose of paying their judgments. In support of the answer no evidence was offered, except the deed, which recited a sale of the lands for the payment of debts against the estate generally. After our reversal, the answer was amended so as to set forth the proceedings in the probate court fully. It alleged that the sale was on the petition of the judgment creditors and solely for the payment of their judgments. The first question now for consideration is whether these new allegations, and the evidence offered to support them, made such a case as would support the decision of the trial court, notwithstanding our former decision. We think it does. Our former decision is based upon the decisions of the Supreme Court of Missouri. We held that the transfer from William Sugg to his brother Wiley was valid as between the parties, their heirs, and personal representatives, and that the probate court of Dunklin county had no jurisdiction on the petition of the administrator to attack the conveyance or to sell the property to pay the general debts of William Sugg. Those were the issues that were then before us, and all language used in the opinion must be confined to them. We are now to decide whether, after the creditors had obtained a decree declaring the transfer to be void as against them, they could then apply to the probate court, in which their judgments had been allowed as claims, and ask the aid of that court to have the lands sold in payment of their judgments. That question was not passed upon when the case was here before.

A correct determination of the question now presented requires an examination of the statutes of Missouri and the decisions of its highest court.

[1] Section 5170 of the Revised Statutes of Missouri of 1889 provides as follows:

"Every conveyance * * * of any estate or interest in lands * * * made or contrived with the intent to hinder, delay or defraud creditors * * * shall be from henceforth deemed and taken, as against said creditors * * * to be clearly and utterly void."

Under this statute the conveyance from William to Wiley Sugg, as against his creditors, was a nullity. As to such creditors the title to the land, both legal and equitable, remained in the fraudulent grantor, precisely the same as if the conveyance had never been executed. They had all the rights and were entitled to all the remedies which would have been theirs if the conveyance had not been made. Bump, in his work on Fraudulent Conveyances, at sections 468 and 469, says:

"The theory of the law is that the fraudulent transfer is void as against creditors. For the purpose of enabling them to enforce their rights the title is deemed to remain in the debtor as though the transfer had never been made, and they may levy on the property and sell it as his property. If the creditors obtain judgments against the debtor after the transfer, they acquire liens upon his property wherever the same are given by law, according to the dates of their respective judgments in the same manner precisely as if no transfer had been made, *for the transfer is a nullity as against them, and the legal as well as the equitable title remains in the debtor for the purpose of satisfying his debts.*"

Freeman, in his work on Executions, at section 136, speaking of the title obtained at an execution sale of property fraudulently conveyed, says:

"The title transferred by such sale is not a mere equity, not the right to control the legal title and have the fraudulent transfer vacated by some appropriate proceeding. It is the legal title itself against which the fraudulent transfer is no transfer at all."

These text-writers express accurately the holding of the courts, many of whose decisions they cite. The Supreme Court of Missouri is in accord with their statements. Slattery v. Jones, 96 Mo. 216, 8 S. W. 554, 9 Am. St. Rep. 344. See, also, Bigelow on Fraud, vol. 2, page 395; Hall v. Stryker, 27 N. Y. 596–600.

Notwithstanding the fraudulent conveyance, the land in question was real estate of which William Sugg was "seised" at the time of his death, within the meaning of subdivision 5 of section 2354 of the Missouri Revised Statutes, which makes all real estate of which a debtor is "seised in law or equity" subject to sale on execution. The judgments obtained against him were liens upon the land precisely the same as if it had not been conveyed. Slattery v. Jones, 96 Mo. 216, 8 S. W. 554, 9 Am. St. Rep. 344.

It is sometimes said that the conveyance as to creditors is not void, but only voidable. Such statements arise out of two facts: First, the conveyance is valid as between the parties, and for that reason it seems inaccurate to speak of it as void, for if it were wholly void it could not be sustained in favor of the grantee. It is a mistake, however, to exalt the rights of a fraudulent grantee, so as to impair the rights of the creditors who were intended to be protected by the statute.

There is really no inconsistency in saying that the conveyance is valid as to the parties, but void as to creditors, because (1) the statute makes it void only as to creditors; and (2) the law, out of considerations of public policy, leaves the transaction to stand as between the parties because it will not aid either party to a fraudulent transaction. Second, though the transaction is void as to creditors, the property does not for that reason become their property, nor can it be applied to the payment of their debts except in some manner authorized by law. Bump on Fraudulent Conveyances, § 450. It is necessary, therefore, that the creditors take some affirmative action in order to have the property applied to the satisfaction of their debts, and this necessity gives some color to the claim that the conveyance is valid until attacked by creditors. A moment's consideration, however, will show that such action on the part of creditors cannot properly be treated as an invalidating of the fraudulent transfer. That is so for this reason: If the debtor had made no fraudulent conveyance, it would be necessary for creditors to take proper affirmative action in order to have the property applied to their debts. In either case they must proceed by execution and sale. If there has been a fraudulent conveyance, it may be necessary to have such conveyance canceled as a cloud upon the title. Such a decree, however, does not amount to a reconveyance of the title from the fraudulent grantee to the fraudulent grantor. It simply leaves the title in the fraudulent grantor and removes a cloud from it. Rutherford v. Carr, 99 Tex. 101, 87 S. W. 815.

At the time of his death, therefore, William Sugg was, as to his creditors, the owner of these lands, upon which their judgments were a specific lien. If the rights of these creditors have been changed, that result was not produced by the transfer but by the death of the fraudulent grantor. What was the effect of his death? Did it cause the judgments to cease to be liens upon the land, or cause the land, as to creditors, to cease to be the property of William Sugg? Such an event certainly ought not to impair vested rights.

[2] It is first urged that after Sugg's death there was but one remedy open to creditors to secure an application of these lands to the payment of their debts. They must go, it is said, into a court of equity, obtain a decree setting aside the conveyance as fraudulent, and then obtain a special execution upon that decree for the sale of the land. The statute of Missouri certainly made that a doubtful remedy. It provides:

> "No execution shall issue upon any judgment or decree rendered against the testator or intestate in his lifetime, or against his executors or administrators after his death, which judgment or decree constitutes a demand against the estate of any testator or intestate, within the meaning of the statute respecting executors and administrators; but all such demands shall be classed and proceeded on in the court having probate jurisdiction, as required by said statute." Section 2360, Revised Statutes 1879.

Even if a special execution upon a decree setting aside a fraudulent conveyance would not come within the letter of this statute, it certainly would come within its spirit. The whole scheme of administration provided by the laws of Missouri contemplates that the entire

property belonging to a deceased person shall be applied to his creditors and passed to his heirs and devisees under the jurisdiction of the probate court. The scheme of those statutes rests upon the solid ground that the rights of all parties concerned in an estate can be protected in no other way. "The provisions of our administrative law" says the Supreme Court of Missouri, "whereby the whole estate of a decedent, both real and personal, may be subjected to the payment of his debts, were designed to entirely supersede the more cumbrous machinery of courts of equity." Titterington v. Hooker, 58 Mo. 593, 597; Priest v. Spier, 96 Mo. 111, 9 S. W. 12. That court in Zoll v. Soper, 75 Mo. 460, sustained the practice of applying property by means of a special execution upon a decree in equity; but it is noteworthy that the opinion contains no reference to the above statute.

Even if it were true that creditors might have sought a sale upon their decree, were they confined to that remedy? Under the Probate Code of Missouri, the debts of a decedent must first be paid out of his estate. His heirs and devisees have no claim upon the estate until such payment has been made. Real estate, the same as personal property, must be sold when necessary to discharge the claims of creditors. It is the primary duty of the probate court, and of the executor or administrator, to discharge these claims before applying any of the estate to heirs or devisees. By the ancient law executors and administrators did not represent creditors. They were called "personal representatives" because they represented the decedent and his heirs and devisees. All that, however, is changed by modern Probate Codes, and especially by the Code of Missouri. By its provisions the executor or administrator is primarily the representative of creditors. When the estate is insolvent, as was the case in William Sugg's estate, the administrator represents nobody but creditors, and the jurisdiction of the probate court is exercised solely on their behalf. Not only is this true generally, but special provisions are made for the payment of judgments which are a lien upon real estate. Section 183, subdivision 4, puts judgments in the fourth class of claims against the estate, and provides as follows:

> "Judgments rendered against a deceased in his lifetime; * * * but if such judgments shall be liens upon the real estate of the deceased, and the estate shall be insolvent, such judgments as are liens upon real estate shall be paid as provided in sections 151, 152, 153, 154, 155, 156, 157, 158 and 159 without reference to classification, except the classes of demands mentioned in the first and second subdivisions of this section, shall have precedence over such judgments."

It is too clear for debate that at the time of his death the lands here in question, as to creditors, belonged to William Sugg. Under the decision of Slattery v. Jones, 96 Mo. 216, 8 S. W. 554, 9 Am. St. Rep. 344, their judgments were liens upon such lands. The estate was insolvent. The lands were sold by the probate court to satisfy those liens in strict conformity with the provisions of sections 151 to 159, above referred to. It would seem, therefore, that the court, by this statute, is expressly granted jurisdiction to make the sale, and that the purchaser acquired all of the estate in the land owned by William

Sugg at the time of his death. It is said, however, by counsel for plaintiff, that William Sugg did not own these lands at the time of his death; that the conveyance between him and his brother was valid as to the parties, and, therefore, no title to the lands passed to the estate of William Sugg. We think such a conclusion would defeat the very object of the statute of Missouri against fraudulent conveyances. Instead of protecting creditors it would exalt the rights of the parties to the fraudulent transfer above the rights of creditors for whose protection the statute was passed. Conceding that the transfer is valid, as between the parties, and that upon considerations of public policy the law will give no aid to either party to such a conveyance, that does not destroy the rights of creditors whose protection was the primary object of the statute against fraudulent conveyances. During William Sugg's life the law viewed these lands in a double light. As to creditors, the property belonged to William Sugg after the conveyance, the same as before. As to William Sugg and his brother, the land belonged to the latter. There is no difficulty in keeping up this dual aspect of the title after William Sugg's death, the same as before. To the extent that his administrator represents his creditors, the land was a part of his estate. To the extent that the administrator represented either the grantor or the grantee to the deed, or their heirs, or devisees, the conveyance was valid, and no interest in it passed to William Sugg's estate. The necessity for keeping up this dual aspect of the title was just as important after William Sugg's death as before. On principle, therefore, as to judgment creditors of William Sugg, the probate court, under the statutes of Missouri, had jurisdiction to cause these lands to be sold and applied to the satisfaction of the claims of such judgment creditors.

These would seem to be necessary conclusions from the statutes of Missouri were it not for certain decisions of the Supreme Court of that state. Those decisions are referred to in our former opinion. They are George v. Williamson, 26 Mo. 190, 72 Am. Dec. 203; Hall v. Callahan, 66 Mo. 316; Zoll v. Soper, 75 Mo. 460. These decisions hold that a conveyance intended to defraud creditors is valid as between the parties, and that executors and administrators are so far personal representatives of the grantor that they cannot maintain a suit to set aside the conveyance, although acting on behalf of creditors. They further hold that the probate court has no jurisdiction to cause lands thus fraudulently conveyed to be sold for the satisfaction of *the general debts of an estate.* These decisions announce rules of property which are binding upon the federal courts. We accepted them in our former decision and accept them now. For reasons already explained, however, we do not think these decisions should be extended. They have never been applied by the Supreme Court of Missouri to a case like that here under review. On the contrary, that court has in language which we held to be obiter in our former opinion, sustained the jurisdiction of the probate court. St. Francis Mill Co. v. Sugg, 169 Mo. 130, 69 S. W. 359. That was one of the appeals in the case which finally resulted in the affirmance of the decree of August 20, 1880. The court there said:

"Appellants now advance the point that assets conveyed by an intestate in fraud of his creditors are not available to the administrator to pay debts, and George v. Williamson, 26 Mo. 190 [72 Am. Dec. 203], Hall v. Callahan, 66 Mo. 316, and Zoll v. Soper, 75 Mo. 460, are cited to sustain the point. Those cases go no further in the direction contended for than to hold that an administrator, as to the acts of his intestate, stands in his shoes, and cannot assail his deed for fraud, even though it be to recover assets to pay creditors of the estate. But there is no authority for the proposition that creditors may not assail a deed made to defraud them by their deceased debtor in his lifetime, and when the deed is set aside at their suit that the administrator may not treat the property thus uncovered as assets of the estate."

An examination of the original record and briefs in the case in which this language was used shows that the issue was more comprehensive than would be usual in such a suit. The issues unfolded as follows: The suit was brought by judgment creditors charging that the conveyance from William to Wiley Sugg was made for the purpose of hindering, delaying and defrauding them. The answer denied the fraud, and alleged that Wiley Sugg was a good faith purchaser. It set up as a second separate defense that plaintiffs' judgments were barred by the statute of limitations. Under their reply plaintiffs met this second defense upon two grounds: First, that the judgments were not barred at the time the suit was commenced, and that the beginning of the suit and not the time of trial should be looked to in determining whether the judgments were barred. Second, they asserted that plaintiffs were in the main purchasers of the land at the probate sale, and that the suit was now being maintained by them as such purchasers, or on behalf of such purchasers, in the name of the original plaintiffs, and for the purpose of protecting the title obtained at the probate sale. To meet this second claim of the plaintiffs, the defendants contended that the probate sale was void, that the court had no jurisdiction to make it, and that the plaintiffs could not maintain the suit either as purchasers or on behalf of the purchasers. To support the issue thus raised the entire proceedings of the probate court were offered in evidence. The question was fully argued in the briefs, and in deciding it the language which we have quoted from the opinion of the Supreme Court of Missouri was used. Looked at in this way, the language would not seem to be obiter. For some reason, on the trial of the present case, there was no direct evidence that the litigation in the courts of Missouri was in fact maintained by and on behalf of the purchasers at the probate sale. If such a showing had been made, it would then be clear that the decisions in 206 Mo. 148, 104 S. W. 45, and 169 Mo. 130, 69 S. W. 359, would be res adjudicata of the matters here involved. The only reason for saying that those decisions were not res adjudicata of the title acquired under the probate sale is that the purchasers were not parties to the record; but if the litigation was maintained by them, or in their behalf with their knowledge, the judgment would be binding on them. Black on Judgments, § 541. Rogers, under whom defendants claim, was a plaintiff in the St. Francis Mill Co. Case, and a purchaser at the probate sale. The Supreme Court of Missouri, in 169 Mo. 130, 69 S. W. 359, uses this language as to the showing on the trial there under review:

"The lands were sold by the administrator, and *the plaintiffs became the purchasers.*"

It thus appears that the litigation was then being carried on by the purchasers at the probate sale, and thus the decision would be binding upon them as purchasers as well as original plaintiffs on the record in the equity suit. The language which we have quoted was the unanimous opinion of the highest court of the state. We held, when the case was here before, that property uncovered by judgment creditors could not be treated "as general assets of the estate." That was the question shown by the record then before us, and all language in our former opinion is to be restrained accordingly. We now hold that a proper construction of the statutes of Missouri sustains the jurisdiction of the probate court upon the facts which are presented by the present record, and that there is nothing in the decisions of the highest court of Missouri, or in the decision of this court, which is in conflict with this holding.

[3, 4] Defendants also established a perfect title under the 30-year statute of limitations of Missouri (section 6770, Revision of 1889), which reads as follows:

"Whenever any real estate, the equitable title to which shall have emanated from the government more than ten years, shall thereafter, on any date, be in the lawful possession of any person, and which shall or might be claimed by another, and which shall not at such date have been in possession of the said person claiming or who might claim the same, or of any one under whom he claims or might claim, for thirty consecutive years, and on which neither the said person claiming or who might claim the same nor those under whom he claims or might claim has paid any taxes for all that period of time, the said person claiming or who might claim such real estate shall, within one year from said date, bring his action to recover the same, and in default thereof he shall be forever barred, and his right and title shall, ipso facto, vest in such possessor."

The court found in favor of the defendants under the plea of this statute, and the evidence abundantly supports the finding. It is conceded that the title emanated from the government, and that the statute covers legal as well as equitable titles. Collins v. Pease, 146 Mo. 135, 47 S. W. 925. Neither the plaintiffs nor any person under whom they claim were in possession of the land at any time for more than 40 years preceding the bringing of this action. In 1898 the defendant, Decatur Egg Case Company, went into actual possession and began cutting timber on the land. In 1904 it constructed a house upon the property which has since been continuously occupied by its tenants. Plaintiffs have never paid any taxes upon the property. The defendant and its predecessors in title, since the sale of the property pursuant to the order of the probate court, have paid all such taxes. These facts make a perfect title under the statute. The term "possession," used in section 6770, refers to the actual possession or occupation of the property. So-called "legal" possession—that is, the possession which the law attaches to the ownership of real property for certain purposes—would not avail either the plaintiff or defendant under this statute. This is manifestly so. Otherwise it would be impossible for the bar of the statute ever to

create a title as against the owner of the fee. After obtaining a decision in their favor in some of the trial courts, in the St. Francis Mill Company Case, plaintiffs applied to the taxing officers of the county, and requested that the lands be assessed to them, and on two or three occasions they offered to pay the taxes. The lands, however, were during all this period assessed to the defendant, and the taxes paid thereon by it, and for this reason the collector refused to accept payment from the plaintiffs. These efforts on their part constitute their only defense against the bar of the statute. They are insufficient. The statute deals only with the actual payment of taxes, and nothing else will defeat its bar. Dunnington v. Hudson, 217 Mo. 93, 116 S. W. 1083. In order to protect their title plaintiffs were not confined to the payment of taxes. It was open to them to bring an action to recover the property within the period fixed by the statute. This they failed to do. Lawful possession, as used in the statute, means possession under color of title. Dunnington v. Hudson, supra; Collins v. Pease, 146 Mo. 135, 47 S. W. 925. Defendant's title was clearly sufficient to meet that requirement.

The judgment is affirmed.

SANBORN, Circuit Judge (concurring). Because I am of the opinion that all the questions in this case, except those arising under the 30-year statute of limitations of Missouri (section 6770, Revision of 1889), were presented to, considered, and decided by this court in Byrd v. Hall et al., 196 Fed. 762, 117 C. C. A. 568, and because I am also of the opinion that the deed of William Sugg was, as to creditors, voidable and not void, that it was valid until avoided and not void until validated, that William Sugg did not die seised of the lands conveyed by that deed, that the probate court was without jurisdiction to sell those lands as part of his estate, and that the administrator's deed of them was void, as this court held in that case, I dissent from that part of the foregoing opinion which treats of these subjects. But I concur in the conclusion that the defendants' title may be sustained under the 30-year statute of limitations.

SUGG et al. v. ESKEW et al.

(Circuit Court of Appeals, Eighth Circuit. October 4, 1915. Rehearing Denied December 18, 1915.)

No. 4317.

In Error to the District Court of the United States for the Eastern District of Missouri; David P. Dyer, Judge.

Action at law by Clyde F. Sugg and others against John Eskew and the Decatur Egg Case Company. Judgment for defendants, and plaintiffs bring error. Affirmed.

Wilson Cramer, of Jackson, Mo., and R. B. Oliver, Sr., of Cape Girardeau, Mo., for plaintiffs in error.

John T. McKay, of Kennett, Mo., and Charles W. Bates, of St. Louis, Mo., for defendants in error.

Before SANBORN and HOOK, Circuit Judges, and AMIDON, District Judge.

AMIDON, District Judge. This is a companion suit to Bryd v. Hall et al., 227 Fed. 537, — C. C. A. —, in which our opinion has just been filed. For the reasons there set forth the judgment in this case is affirmed.

WENIGER v. SUCCESS MINING CO. et al. (KIMBALL et al., Interveners).

(Circuit Court of Appeals, Eighth Circuit. September 27, 1915.)

No. 4375.

(Syllabus by the Court.)

1. CORPORATIONS ⟹108—UNAUTHORIZED ISSUANCE OF STOCK—ESTOPPEL—CERTIFICATE.

While a corporation may recover of the first transferee, or other purchaser with notice, stock unauthorized, or issued on a stolen certificate, or on a forged assignment, or its value, it is estopped by its certificate to the first transferee from maintaining a suit to recover the stock, its value, or the dividends thereon from a second transferee, who was a bona fide purchaser for value without notice, in reliance upon its certificate to the first transferee.

[Ed. Note.—For other cases, see Corporations, Cent. Dig. §§ 459, 460; Dec. Dig. ⟹108.]

2. CORPORATIONS ⟹104, 112—CERTIFICATES OF STOCK—VALIDITY—ESTOPPEL.

Certificates of stock, while not strictly negotiable, are closely analogous to negotiable paper, and should be sustained, in the absence of an insuperable legal obstacle.

Corporations and their officers, who, by the apparent legality of their obligations, or by statements or recitals of their validity, induce innocent purchasers to invest in them, are estopped from denying their legality, or the truth of the representations they contain, on the ground that in some preliminary proceedings which led to their execution, or in their execution itself, they failed to comply with some law or rule of action relative to the time or manner of their procedure with which they might have lawfully complied, but which they carelessly disregarded.

[Ed. Note.—For other cases, see Corporations, Cent. Dig. §§ 454, 464, 465; Dec. Dig. ⟹104, 112.]

⟹For other cases see same topic & KEY-NUMBER in all Key-Numbered Digests & Indexes

3. EQUITY ⚷3—JURISDICTION—RELIEF.

"A court of equity can act only on the conscience of a party. If he has done nothing that taints it, no demand can attach upon it, so as to give any jurisdiction."

[Ed. Note.—For other cases, see Equity, Cent. Dig. §§ 7–12; Dec. Dig. ⚷3.]

4. EVIDENCE ⚷89—PROBATIVE EFFECT—RECEIPT OF LETTER.

The denial by an addressee that he received a letter or postal card, of the mailing of which there is positive testimony, is not conclusive, and should be carefully weighed. Such denials considered, and *held* insufficient to overcome the testimony of the mailing and the presumption of delivery.

[Ed. Note.—For other cases, see Evidence, Cent. Dig. § 111; Dec. Dig. ⚷89.]

5. EQUITY ⚷70—NOTICE ⚷6—LACHES—IGNORANCE OF FACTS.

Ignorance which is the effect of inexcusable negligence is no excuse for laches, and knowledge of facts and circumstances which would put a person of ordinary prudence and diligence on inquiry is in the eyes of the law equivalent to a knowledge of all the facts which a reasonably diligent inquiry would disclose.

[Ed. Note.—For other cases, see Equity, Cent. Dig. §§ 200–203; Dec. Dig. ⚷70; Notice, Cent. Dig. §§ 4–7; Dec. Dig. ⚷6.]

6. CORPORATIONS ⚷108—EQUITY ⚷72—LACHES—ESTOPPEL—CHANGES IN SITUATION.

While mere delay for a time longer than that fixed by the analogous statute of limitations at law may not work laches, the intervention during such delay of great changes in the value of speculative property and of the rights of an innocent purchaser, and the loss, by the disappearance of an important witness, of evidence of the facts of the transactions in controversy, are ample to work the estoppel of a fatal laches.

The silence and inactivity of a stockholder of a corporation for five years after an illegal sale by his company of his stock for an unpaid assessment, and until, upon the certificate of such sale to the purchaser, an innocent purchaser has bought the stock and received a certificate to himself, and a further delay of two years before bringing suit against the second transferee, the bona fide purchaser, estops the stockholder from obtaining any relief in equity against him.

[Ed. Note.—For other cases, see Corporations, Cent. Dig. §§ 459, 460; Dec. Dig. ⚷108; Equity, Cent. Dig. §§ 207, 210–220, 225, 226; Dec. Dig. ⚷72.]

Appeal from the District Court of the United States for the District of Utah; J. A. Marshall, Judge.

Suit by George Weniger against the Success Mining Company and others, wherein M. Kimball and others intervened. From the decree, plaintiff and interveners appeal. Affirmed.

The appellants were the plaintiff and the interveners in a suit in equity against Jesse Knight, W. L. Mangum, Jacob Evans, and the Success Mining Company, a corporation, for the restoration to the Success Mining Company of certain stock of that corporation issued to Knight, and for the recovery by that company of the dividends that had been paid thereon. The plaintiff was, prior to 1910, the owner of 4,000 shares of stock in the Success Mining Company, which that company in April, 1900, for a failure to pay the eighth assessment thereon, sold to C. E. Pearson, to whom it issued its stock certificate for this and other stock similarly situated. The interveners comprise other owners of stock prior to 1900 and the assignees of such owners, whose stock the

company attempted to sell and certify to Pearson in the same way, and the plaintiff and these interveners will henceforth be termed the complainants, and treated as though all of them were the original owners of this stock. The certificate of this stock issued to Pearson was dated April 14, 1900, and was for 84,925 shares. It was in the usual form, and certified that he was the owner of that number of shares of stock of the Success Mining Company. Complainants claim, and this will be conceded, that 64,925 of these shares were certified to Pearson on account of the attempted sale of complainants' stock, and that on account of the failure to prove compliance with all the legal requirements this sale was irregular and illegal. More than five years after this sale, and in 1906, Jesse Knight bought this stock of Pearson, Pearson's certificate was assigned and surrendered to the company, and certificates for the stock, and for other stock which Knight had bought, sufficient in amount to make him the owner of the majority of the stock of the corporation, were issued to Knight. Thereafter, by proper corporate proceedings, he made himself, Mangum, and Evans directors of the Success Company, and by means of the votes of the stockholders and the subsequent action of these defendants as directors he caused the Success Company to sell all its property to the Colorado Mining Company, another corporation, in October, 1906, for 79,500 shares of the stock of the latter company, which was distributed as a stock dividend among the stockholders of the Success Company, so that the share thereof distributable to the stock in controversy went to Knight, and not to the owners of the stock before the attempted sale thereof for failure to pay the eighth assessment.

The complainants commenced this suit on October 17, 1910. The theory of their complaint was that the attempted sale of their stock for failure to pay the eighth assessment was void, that before that sale all the stock of the Success Company had been issued, that they remained the owners of their stock notwithstanding the attempted sale, that the 84,925 shares issued to Pearson on account of the attempted sale under the eighth assessment constituted an overissue of stock and were void, that the Success Company, and Knight, Mangum, and Evans, as directors thereof, wrongfully distributed 17,205 shares of the Colorado Company's stock, which was the share of the 79,500 shares received from that company on account of the sale of complainants' stock to Pearson, to Knight, when they ought to have distributed it to the complainants, and they pray that "the Success Mining Company have judgment against Jesse Knight and his codefendant directors, that he return and restore to the treasury of said corporation all of the Colorado mining stock which he received as and for a dividend" on the stock of the Success Company issued to Pearson on account of the attempted sale of the complainants' stock for failure to pay the eighth assessment, and bought of Pearson by Knight, and for all the dividends thereon, or that the Success Company recover the value of such Colorado Company stock and the dividends thereon, so that the Success Company may distribute to the complainants the amount so recovered.

The defendant answered, among other things, that the eighth assessment on the complainants' stock was duly levied, that complainants were notified of it, that they failed to pay it, that their stock was thereupon sold on account of that failure to C. E. Pearson in April, 1900, that Knight was a stranger to the Success Company, without stock or interest in it, that in 1906 he bought the stock issued to Pearson in reliance upon the certificate Pearson held, and paid therefor about five cents a share, without any notice of any overissue of stock, or of any other defect in the title of the stock, or in the certificate which Pearson held, that thereupon Pearson's certificate was assigned and surrendered to the company and certificates were issued to him, that it was not until after Knight had made and paid for this purchase that he, Mangum, and Evans became officers or directors of the Success Company, and that their actions, as such were neither fraudulent nor wrongful, but lawful and just.

A large amount of evidence was introduced, the case was argued and submitted on final hearing, and the court below found for the defendants, and dismissed the suit on its merits.

E. A. Walton, of Salt Lake City, Utah (D. B. Hempstead and C. S. Patterson, both of Salt Lake City, Utah, on the brief), for appellants.

Andrew Howat, of Salt Lake City, Utah (H. R. Macmillan and Frank K. Nebeker, both of Salt Lake City, Utah, and E. E. Corfman, of Provo, Utah, on the brief), for appellees.

Before SANBORN and CARLAND, Circuit Judges, and TRIEBER, District Judge.

SANBORN, Circuit Judge (after stating the facts as above). The argument on which counsel for the complainants seem to rely most confidently for a reversal of the decree below is that they remained owners of their original stock notwithstanding the Success Company's attempt to sell the same for a failure to pay the eighth assessment thereon, that all the authorized stock of the corporation had been issued before that sale, and that therefore the stock issued to Pearson in place of their stock was an overissue and void. But if the soundness of this contention be conceded, would the complainants be entitled to the relief they seek against the defendants Knight, Mangum, and Evans? This is a suit in equity, which the complainants have brought and based upon the right of the Success Company. They have alleged in their complaint that that company is insolvent, that it has no property but this claim against the defendants, that it is in the control of the defendants, that it is useless to apply to that company or to any of its officers to bring this suit, and the only decree they ask against the defendants is one in favor of the Success Mining Company. The stream cannot rise higher than its source, and the complainants were entitled to no decree against the defendants unless the facts of this case disclosed the right of the Success Company to like relief. That company had the jurisdiction, power, and right, by a compliance with the method of proceeding prescribed by law, to levy the eighth assessment and to sell and certify the stock of the complainants to Pearson on account of their failure to pay the assessment, and thereby to substitute the stock certified to Pearson for that originally issued to the complainants. The company attempted to do this, but failed, not for lack of power, but because it failed to comply with certain provisions of law relative to the time and manner of its procedure. Nevertheless it issued its certificate to Pearson for this stock, and therein certified that he was the owner of the 84,925 shares held by the complainants and others similarly situated before the attempted sale. The par value of this stock was 10 cents a share. It had been originally issued in exchange for the Success mining claim. That claim had never produced any ore, and none ever was discovered upon it before or since. The company and its stock had produced nothing but eight assessments. Knight owned a large interest in an adjoining claim, and with the aid of Williams, the secretary of the Success Company, he purchased a majority of the stock of that company, and among other stock, that certified to Pearson. He was a stranger to the Success Company, without stock or interest in it. He paid for this stock about 5 cents a share. The evidence leaves no doubt that Knight had no knowledge

or notice that this certificate to Pearson was for overissued stock, that it was in any degree untrue, or that there was any defect therein, or in the stock or its title.

At the time of this purchase one Williams was the secretary of the Success Company, and after Knight concluded to buy the stock of that company he negotiated with Williams to assist him in finding the stockholders and purchasing the stock, and Williams procured for him the certificate of the Pearson stock and the assignment thereof, which was surrendered to the Success Company and certificates issued to Knight therefor. Knight paid Williams about $2,500 for this stock, and counsel for the complainants argue that, because he bought the stock of Williams, Knight was not a bona fide purchaser thereof, under the rule that one dealing with an officer of a corporation in a matter in which the officer is personally interested is not a bona fide holder of corporate securities received by him from the officer in such a transaction. 1 Cook on Corporations (6th Ed.) § 293. But this case does not fall under that rule, because there is no proof that Williams ever owned the Pearson stock, because in the purchase of this stock he was not acting in any way as an officer of the corporation or for it, but in his individual capacity for Knight, and because there is no substantial evidence that Williams himself knew, or had any notice or reason to believe, that the stock described in the Pearson certificate was not genuine and valid. The books of the company contained a recital of the resolution levying the eighth assessment, although that recital was not signed by the secretary, and a notice to stockholders of the levy and of the sale of the stock if the assessment was not paid by a time there named. A witness came to testify that he mailed a notice of the assessment and sale to each stockholder, that the notice was published in a daily paper in Salt Lake City, the stubs of the stock which was attempted to be sold were marked "Sold for Assessments," and the certificate was issued to Pearson. That the rule invoked from section 293 of Cook on Corporations is inapplicable to a case in which the officer is not acting in the transaction in the twofold capacity of an officer of the corporation and an individual personally interested, and that the contention of counsel here is untenable, is well illustrated by the cases cited by Cook in support of his text. Titus v. Prest., etc., G. W. Turnpike Road, 61 N. Y. 237; Moores v. Citizens' National Bank, 111 U. S. 156, 169, 4 Sup. Ct. 345, 28 L. Ed. 385.

[1] Under the state of facts which has been recited there are many reasons why the Success Company is estopped from maintaining a suit in equity against Knight or the other defendants for the relief prayed in this action. The certificate to Pearson contained the unqualified statement of the Success Company that he was the owner of the shares of stock in the corporation therein specified. This was a statement and representation that the stock described in the certificate was not an overissue and was not void, but that it was valid stock and the certificate was made for the express purpose of inducing, and with the expectation that it would induce, strangers to purchase the stock and the certificate. A stranger did purchase them in good faith. And while a corporation may recover of the first transferee,

or other purchaser with notice, stock unauthorized or issued on a stolen certificate, or on a forged assignment, or in lieu thereof the value of such stock, it is estopped by its certificate to the first transferee from maintaining a suit to recover the stock, its value, or the dividends thereon, from a second transferee, who was a bona fide purchaser for value without notice of any defect in the title to the stock, or the certificate, in reliance upon the certificate to the first transferee. 2 Cook on Corporations (7th Ed.) §§ 367, 368, 369, 370; In re Bahia & San Francisco Ry. Co. (1868) L. R. 3 Q. B. 584, 595, 597, 598; Machinist's National Bank v. Field, 126 Mass. 345, 348; Kimball v. Success Mining Co., 38 Utah, 78, 96, 110 Pac. 872; 3 Clark and Marshall on Corporations, § 597 (e), page 1823.

[2] Again, the Success Company had the power and the right to levy the assessment upon the stock of the complainants, to sell to Pearson for their failure to pay the assessment, and to transfer and certify their stock to him. It was not beyond its corporate powers to issue a certificate for valid stock on a sale of the stock to Pearson. Its failure to make the stock valid and the certificate true as against the former stockholders and in favor of itself resulted from a failure to comply with a method of procedure which it might have pursued. Although not strictly negotiable paper, stock certificates, like county warrants, bonds, and promissory notes, are constantly and frequently sold in the open market, and are the subjects of a multitude of commercial transactions. In view of this fact, their validity, like that of negotiable paper, should be sustained, where no insuperable legal obstacle forbids. Bank v. Lanier, 11 Wall. 369, 377, 378, 20 L. Ed. 172; National City Bank v. Wagner, 216 Fed. 473, 481, 132 C. C. A. 533, 541. And corporations and their officers who, by the apparent legality of their obligations, or by statements or recitals of their validity, have induced innocent purchasers to invest in them, or on them, are estopped from denying their validity or the truth of the representations they contain, on the ground that in some preliminary proceedings which led to their execution, or in their execution itself, they failed to comply with some law or rule of action relative to the time or manner of their procedure with which they might have complied, but which they carelessly disregarded. Merchants' Bank v. State Bank, 10 Wall. 604, 644, 19 L. Ed. 1008; Speer v. Board of County Com'rs, 88 Fed. 749, 758, 32 C. C. A. 101, 111; Sioux City Terminal Railroad & Warehouse Co. v. Trust Co. of North America, 27 C. C. A. 73, 86; 82 Fed. 124, 137; Town of Aurora v. Gates, 208 Fed. 101, 109, 125 C. C. A. 329, 337, L. R. A. 1915A, 910.

[3] And, finally, "a court of equity can act only on the conscience of a party; if he has done nothing that taints it, no demand can attach upon it, so as to give any jurisdiction." Boone v. Chiles, 10 Pet. 176, 210, 9 L. Ed. 388; Steinbeck v. Bon Homme Min. Co., 152 Fed. 333, 339, 81 C. C. A. 441, 447. Knight purchased Pearson's stock without knowledge or notice of any invalidity in it, in reliance upon the certificate of the Success Company that it was valid. There was nothing unjust or unfair in that act. The Success Company was thereupon and thereby estopped from maintaining that its certificate

was not true, and in view of that fact, when Knight and his codirectors, Mangum and Evans, subsequently distributed to the stockholders of the Success Company the stock dividend they had obtained from the sale of the Success mining claim, they respected the estoppel and distributed to Knight his proportion of that dividend, so that he thereafter received the cash dividends paid on his due proportion of the Colorado Mining Company's stock. There was nothing inequitable, or unjust, or unfair to the Success Company, nothing to taint the conscience of Knight, or Mangum, or Evans in any of these acts; there was no fraud, or deceit, or misrepresentation, or wrong, and the Success Company never had any cause of action in equity against them. And as the complainants' suit is in the right of action of the corporation, and the corporation has no such right, the complainants cannot maintain this suit, and it was rightly dismissed.

Although by their pleadings the complainants limited their suit to the right of action of the Success Company, their counsel have contended in argument and brief for the individual rights of the complainants to recover of Knight and his codirectors. An exhaustive examination of the record and thoughtful deliberation, however, have satisfied that they could not have succeeded any better if they had sued in their own rights. While they counted on the distribution in 1906 by the defendants as directors of the Success Company to Knight of the share of the Colorado Company's stock and its dividends which pertained to the stock in the Success Company originally owned by them, and which the Success Company was estopped, as we have seen, from denying to Knight, that was not the act, nor were the defendants the wrongdoers, that caused the complainants to be deprived of the benefit of their stock. That act was the illegal sale of their stock to Pearson in April, 1900, and the Success Company was the wrongdoer. Their cause of action arose at the time of that sale. They could then, at their option, have maintained a suit against the Success Company, and Pearson, if he had notice of the illegality of the sale, to cancel the sale and certificate to him, and to reinstate their stock, or an action for damages against the Success Company for its unlawful sale. They took no action whatever, and the attempted sale of their stock, the certificate to Pearson, and their inactivity naturally and logically resulted in the purchase in 1906 of that certificate and the stock it described by Knight, and the subsequent distribution to him in that year of the share of the Colorado Company's stock due to the stock in controversy.

Suppose that the complainants were legally entitled to receive from the Success Company the dividend of the Colorado Company's stock pertaining to the Success Company's stock in controversy; could the complainants have maintained a suit in equity to compel Knight and his codirectors to assign it to them, or an action against them for damages for their failure to do so after the complainants had remained silent and inactive from that sale in April, 1900, until after Knight in 1906 had bought and paid for the stock certified to Pearson in reliance upon his certificate? The Success Mining Company was incorporated in December, 1898, with a capital stock of $30,000, di-

vided into 300,000 shares, of the par value of 10 cents each, and this stock was paid for by the conveyance to the Success Company of the Success mining claim. No valuable ore had ever been discovered on that claim, and none has ever been discovered since. The only value of the claim was in the possibility that ore might be discovered and the possibility that some one might believe that such ore would be discovered and buy it in that hope. The entire 300,000 shares were issued before the eighth assessment was made. When the mining claim had been conveyed to the Success Company for its stock, that company had no means of paying salaries of its officers and employés, or any expenses of operation, or of prospecting for or developing ore, except by levying and collecting assessments upon its stock. The only business it ever conducted was making assessments, collecting those assessments, expending the moneys thus obtained, and incidentally selling the stock of those who failed to pay, to any one who would buy it, and it abandoned that occupation in 1900. Sales of stocks of those who failed to pay their assessments were made on the second assessment on March 11, 1899, on the third on April 10, 1899, on the fourth on May 15, 1899, on the fifth on June 10, 1899, on the sixth on July 26, 1899, on the seventh on November 11, 1899, and on the eighth on April 14, 1900. The number of delinquents increased from one on the second assessment to 66 on the eighth.

Williams, who was the secretary and treasurer of the Success Company until after it sold its mining claim on October 3, 1906, to the Colorado Company, and who conducted the proceedings for the assessments and sales, left Utah a few weeks after October 3, 1906, and was unavailable as a witness in this case at the hearing. But among the old records of the Success Company there was found an affidavit of publication of a notice of the eighth assessment, and of the delinquent sale on April 14, 1900, of any stock on which the assessment should not be paid on or before March 17, 1900, and it was admitted that this notice was published in the daily issue of the Salt Lake Herald for 30 consecutive issues, commencing February 13, 1900. It was also admitted that a similar notice of the fifth, sixth, and seventh, assessments, and of the delinquent sales thereunder, was published in the daily issues of the same paper in like manner. Mr. Woodruff was an assistant to Williams, the secretary, and he testified that he personally mailed to each of the stockholders of the Success Company whose names appeared on the books of that company, and also to the party who paid the last preceding assessment on the stock, a copy of the notice of the eighth assessment, and of the sale for a failure to pay that assessment, that he did this himself, and that he had prior to that time mailed a similar notice of each of the preceding assessments and sales to the same parties. After the eighth assessment, and the sale thereunder in April, 1900, nothing was done by the Success Company until after Knight purchased a majority of its stock in 1906. Then its property was sold to the Colorado Company. Prior to Knight's offer in the spring or summer of 1906 to buy its stock for about 5 cents per share, that stock had no market value, and its prop-

erty had no intrinsic value. During the year after the purchase of the Success Company mining claim, the year 1907, Knight and his associates in the Colorado Company developed and mined ore on some of the property it held prior to the purchase of the Success claim, and the Colorado Company commenced to pay dividends, and its stock, which had previously been worth about 20 cents per share, rose in value to several dollars per share, and between May 9, 1907, and June 25, 1911, dividends were paid on it to the amount of $2.45 per share. Although most of the complainants paid the first seven assessments, of which, according to the testimony of Mr. Woodruff, they received the same notice that they did of the eighth, they did not pay the eighth assessment, with the single exception of Mr. Kimball, and thenceforth they made no inquiry concerning and did nothing with their stock, or their company, until after the sale of the Success mining claim to the Colorado Company on October 3, 1906, and they failed to institute this suit until October 17, 1910, more than 10 years after the attempted sale of their stock to Pearson, and about 4 years after the distribution of the stock of the Colorado Company to the stockholders of the Success Company.

[4] The rule for the application of the doctrine of laches to suits in equity was stated by this court in Kelley v. Boettcher, 85 Fed. 55, 62, 29 C. C. A. 14, 21, and has been often repeated. The delay of the complainants in bringing suit is far beyond any allowed by the analogous statute of limitations at law. The excuses which they make for that delay are: (1) That they received no notice of the eighth assessment, or of the sale thereunder, until after October 3, 1906, when the sale to the Colorado Company was made; (2) that, while their delay has been great, mere delay is not sufficient to constitute the indispensable estoppel of fatal laches, and no such changes of position, situation, or of value have accrued meanwhile as will effect it; (3) that inasmuch as Knight has received $2.45 in dividends on the stock of the Colorado Company no injustice will be done him by requiring him to pay to the complainants the value of the 17,025 shares of such stock which he received in exchange for the stock of the complainants sold to Pearson and bought by himself and the dividends thereon; and (4) that the complainants commenced futile suits for relief in 1908. It is conceded that the futile suits of the complainants for relief which they brought in 1908 released them from any charge of laches between that time and the commencement of this suit. Are the defendants relieved of the charge of laches by their failure to receive notice of the eighth assessment or of the sale thereunder? They have testified with varying degrees of positiveness, some that they never received any notice of that assessment or of the sale thereunder until after October 3, 1906, some that they paid all the assessments of which they received notice, some that they do not recollect receiving any notice of the eighth assessment or the sale under it, and some that they are uncertain whether they received such notice or not. No doubt each of them testified to that which he believed to be the truth, and correctly gave his recollection or his lack of it. But they testified more than 10 years after the event, without note or memorandum

made at the time, concerning an ordinary occurrence, for they had received notices of seven assessments, and had paid most of them within a year, and the unaided memory of man is notably inaccurate after 10 years on such a question as whether or not he received notice of seven or eight successive assessments and sales.

On the other hand, Mr. Woodruff had the record largely written by himself, of the resolutions making the levies of the assessments, he had the printed and published notice of the eighth assessment and of the contemplated sale thereunder, he had a copy thereof on a postal card attached to one of the books of the company, and the fact was that it was an important part of his duty to correctly mail those notices to the stockholders. These facts, the fact that he would not be likely to forget a uniform method of giving the notices, his positive testimony that he used the same method in giving notice of each of the eight assessments and of each of the sales thereunder, and that he mailed notices of the eighth assessment and of the delinquent sale thereunder to each of the stockholders, have persuaded that it is more probable that those notices were mailed to and received by the complainants, and forgotten by them, than that Mr. Woodruff was mistaken in his testimony. The complainants concede that they received notices of the previous assessments, which he testified he mailed to them, and that fact lends support to the probability that they also received the notices of the eighth assessment and of the sale thereunder, which he testified he sent in the same way. The denial of an addressee that he received a letter or postal card, of the mailing of which there is positive evidence, is not conclusive, and should be carefully weighed. In re Imperial Land Co. of Marseilles, L. R. 15 Eq. Cas. 18, 23, 42 L. J. Ch. 372, 377; In Matter of Wiltse, 5 Misc. Rep. 105, 25 N. Y. Supp. 733, 736, 737; Davidson S. S. Co. v. United States, 142 Fed. 315, 318, 73 C. C. A. 425.

[5] Moreover, these complainants knew that they had stock in the Success Company, that their stock was assessable, and for a failure to pay the assessment salable by that company. It was their company, and by owning stock in it they had empowered it to make such assessments and sales. They knew that it had made seven such assessments within a year, that assessments upon their stock were with it the order of the day, and that it was by means of such assessments alone that it obtained the money for the expenses of its operations. The notice of the eighth assessment and of the sale for its nonpayment was published daily for 30 days in a newspaper in Salt Lake City, and even if complainants never received the postal card notice they may not escape the legal conclusion from these facts that they had notice of that assessment and sale. For ignorance which is the effect of inexcusable negligence is no excuse for laches, and knowledge of facts and circumstances which would put a person of ordinary prudence and diligence on inquiry is, in the eyes of the law, equivalent to a knowledge of all the facts which a reasonably diligent inquiry would disclose. "Whatever is notice enough to excite attention, and put the party on his guard, and call for inquiry, is notice of everything to which such an inquiry might have led. When a person has sufficient information

to lead him to a fact, he shall be deemed conversant of it." Kennedy v. Green, 3 Mylne & Keen, 699, 719, 722; Wood v. Carpenter, 101 U. S. 135, 141, 25 L. Ed. 807; Swift v. Smith, 79 Fed. 709, 713, 25 C. C. A. 154, 158, and cases there cited; Wetzel v. Minnesota Railway Transfer Co., 12 C. C. A. 490, 65 Fed. 23; Percy v. Cockrill, 53 Fed. 872, 875, 4 C. C. A. 73, 76; Metropolitan Bank v. St. Louis Dispatch Co., 149 U. S. 436, 451, 13 Sup. Ct. 944, 37 L. Ed. 799; Felix v. Patrick, 145 U. S. 317, 330, 331, 12 Sup. Ct. 862, 36 L. Ed. 719. "If a person be ignorant of his interest in a certain transaction, no negligence is imputable to him for failing to inform himself of his rights; but if he is aware of his interest, and knows that proceedings are pending the result of which may be prejudicial to him, he is bound to look into such proceedings so far as to see that no action is taken to his detriment." And a party must be held to have notice of such facts as he would readily have ascertained had he used ordinary diligence. Foster v. Mansfield, Coldwater, etc., R. R., 146 U. S. 88, 99, 13 Sup. Ct. 28, 32, 36 L. Ed. 899.

The complainants knew of their interest, they knew the Success Company was operating under assessments of its stock and sales therefor, they knew there had been seven such assessments in the first years of the corporation, the books of the corporation which disclosed the notice of the sale of their stock and the illegal sale itself in April, 1900, were open to them, and an examination of these books or inquiry of the secretary of their company would have disclosed the illegal sale. Their knowledge of their ownership of their stock, of the method of operation of their company by assessment, of the fact that seven assessments had been made within a year prior to 1900, and of the fact that from that time until 1906, when Knight bought, no assessments were made by it, and nothing was said regarding their stock, constitute ample notice that proceedings were pending in their company which might be prejudicial to them, and constitute sufficient notice to them to put a person of ordinary prudence and diligence on inquiry as to the action of their company with reference to the assessment of their stock during the years following 1899 which a reasonably diligent inquiry would have disclosed.

[6] Counsel next invoke the rule that mere delay does not work the estoppel necessary to constitute laches, and that no such changes of position and of value as are required so to do have occurred. But between the year 1900 and the year 1908 the stranger to the company, Knight, became a bona fide purchaser for value of the stock certified by the Success Company to Pearson on the illegal sale, the Success Company became estopped from avoiding the certificate and transfer of this stock to Knight, the value of the stock of the Colorado Company received for the property of the Success Company became several times as great as it was in 1906, when that company purchased the property of the Success Company, and Williams, the secretary and treasurer of the latter company, disappeared, so that his knowledge and testimony concerning the transactions were unavailable. Here were great changes in the value of speculative property, the intervention of the rights of an innocent purchaser, the loss of important evidence

of the facts of the transactions, the very things which, combined with delay, work the estoppel of fatal laches. Kelley v. Boettcher, 85 Fed. 55, 62, 29 C. C. A. 14, 21; Steinbeck v. Bon Homme Mining Co., 152 Fed. 333, 345, 81 C. C. A. 441, 453.

Charged, as the facts and the law of the case convince they were, with notice of the sale to Pearson, and vested, as they were, with the right to avoid that sale until Pearson sold his certificate and the stock it described to Knight, it was the duty of the complainants to bring their suit to avoid that sale to Pearson before a stranger purchased his stock in reliance upon his certificate if they would protect themselves against a bona fide purchaser thereof. A stockholder having notice of the illegal sale of the stock to a third party by his corporation for an assessment thereon is estopped from any relief in equity or at law against a bona fide purchaser from the purchaser at the assessment sale in reliance upon the latter's stock certificate by his silence and failure to take any legal proceedings to avoid the assessment sale for more than five years and until the bona fide purchaser has paid for the stock, surrendered the certificate, and received a new certificate from the company to himself. Curtis v. Lakin, 94 Fed. 251, 254, 256, 36 C. C. A. 222, 225, 227; Rabe v. Dunlap, 51 N. J. Eq. 40, 47, 48, 25 Atl. 959, 962; Kent v. Quicksilver Mining Co., 78 N. Y. 159, 187, 188.

Finally, counsel invoke the maxim that laches is a rule of equity, and that it will not be applied to work injustice, and argue that the complainants may recover of Knight the 17,025 shares in stock of the Colorado Company, or the value thereof and dividends thereon, without loss or injustice to Knight, and that the refusal to grant this relief would be inequitable. Let us see. Where equities are equal, a chancellor may grant no relief; and where one of two innocent parties must suffer from the fault of a third, he must sustain the loss who put it in the power of the third to occasion it. The complainants by their purchase and ownership of their stock put it in the power of their company, the Success Company, to make the illegal sale of their stock, to issue the certificate to Pearson, and thereby to make the false representation that he owned their stock, which induced the stranger, Knight, to buy and pay about $2,500 therefor. The complainants, therefore, rather than Knight and his codefendants, who acted upon the certificate to Pearson and to Knight, should bear the loss rather than the defendants.

In April, 1906, when complainants' stock was sold to Pearson, it had no intrinsic and no market value, and the Success Company had no property of any intrinsic value. The complainants never expended any money, bestowed any fruitful thought or labor, or took any action whereby the market value of that stock, or of the property of the Success Company, was enhanced. Knight and his associates were the owners of the stock of the Colorado Company and controlled its action. He bought and paid about $2,500 for the stock of the complainants which their company had certified belonged to Pearson. He bought other stock of the Success Company, until he owned the majority of it. He then caused the Success Company to sell its property,

which was actually worthless, but which he then thought might contain some ore, to the Colorado Company for shares of its stock which he and his associates in the Colorado Company furnished, and thereafter by his and their energy, ability, and industry, they developed valuable ore in the prior holdings of the Colorado Company, which enhanced the value of its stock, and in the course of five years enabled it to pay $2.45 per share in dividends. During all this time the complainants planned nothing, expended nothing, did nothing, to make the worthless stock of the Success Company valuable, or to enhance the value of the stock of the Colorado Company. Knight bought the stock of the Success Company, certified to Pearson in good faith. He and his codefendants were guilty of no fraud or wrong. It would be inequitable to take from Knight, or from his associates, and turn over to the complainants, the fruits of Knight's endeavors, honestly earned, to which the silence, inactivity, and inattention of the complainants contributed nothing, to permit the representation of their company that it had sold their stock to Pearson to remain outstanding five years, and finally to induce Knight to buy the stock from him and then to take it from him. There is no equity in the case of the complainants, and they are entitled to no relief.

The fact that Mr. Kimball paid the eighth assessment has not been overlooked. Much that has been said of the complainants was not intended to apply, and is inapplicable, to him. But because, by his ownership of stock in the Success Company, and by his silence, inattention, and inactivity from April 14, 1900, until 1906, he placed and left it in the power of his company to induce Knight to buy his stock by its certificate of Pearson's ownership of it, and because he said and did nothing to make that stock, or the stock of the Colorado Company, valuable, while Knight and his associates by their energy and industry greatly enhanced their value, his equities are inferior to those of the defendants, and his case must suffer the fate of the cases of his cocomplainants.

The decree of the court was right, and it is affirmed.

THOMPSON v. EMMETT IRR. DIST. et al.

(Circuit Court of Appeals, Ninth Circuit. August 9, 1915.)

No. 2479.

1. APPEAL AND ERROR ⟹927—QUESTIONS OF FACT—APPEAL FROM ORDER OF NONSUIT.

   On an appeal from an order of nonsuit, the allegations of the complainant's bill must be taken as true.

   [Ed. Note.—For other cases, see Appeal and Error, Cent. Dig. §§ 2912, 2917, 3748, 3758, 4024; Dec. Dig. ⟹927.]

2. QUIETING TITLE ⟹34—IRRIGATION BONDS—COMPLAINT—CAUSE OF ACTION.

   A bill by the purchaser of bonds issued by an irrigation district in Idaho, for a valuable consideration and after judicial determination of the regularity of its organization and authority, alleging that interest coupons had not been paid; that the directors of the district had levied and collected assessments on the lands therein for the payment of such in-

terest and defaulted in interest on the ground that part of the bonds had been sold without consideration or adequate consideration, without designating such bonds by number or otherwise—stated a case for the removal of a cloud upon the title to personal property.

[Ed. Note.—For other cases, see Quieting Title, Cent. Dig. §§ 69, 71, 72, 76, 77; Dec. Dig. ⚷34.]

3. COURTS ⚷262—UNITED STATES COURTS—JURISDICTION—EQUITY.

Under Judicial Code, § 57 (Act March 3, 1911, c. 231, 36 Stat. 1102 [Comp. St. 1913, § 1039]), providing for the appearance and answer of absent defendants in suits to remove cloud on title to real or personal property, a federal court of equity has jurisdiction of a suit by the holder of irrigation bonds to remove a cloud on the title thereof before the time at which any judgment might be obtained determining their validity.

[Ed. Note.—For other cases, see Courts, Cent. Dig. §§ 797, 798; Dec. Dig. ⚷262.]

4. QUIETING TITLE ⚷30—BILL—PARTIES.

A holder for value of the bonds of an irrigation district may bring a suit for himself and all other holders choosing to join therein to remove a cloud upon his title to the bonds.

[Ed. Note.—For other cases, see Quieting Title, Cent. Dig. §§ 64-66; Dec. Dig. ⚷30.]

5. WATERS AND WATER COURSES ⚷230—IRRIGATION DISTRICTS—BONDS—OFFICERS AS TRUSTEES.

The officers of an irrigation district stood in the relation of trustees for the holders of the district's bonds, and the moneys collected by them from the taxpayers for the payment of interest on the bonds was a trust fund, and their diversion thereof, by not applying it to payment of the interest, made them liable for breach of trust.

[Ed. Note.—For other cases, see Waters and Water Courses, Cent. Dig. § 319; Dec. Dig. ⚷230.]

6. COURTS ⚷262—UNITED STATES COURTS—EQUITABLE JURISDICTION—ENFORCEMENT OF TRUST—STATUTE.

The District Court had jurisdiction of an amended bill in equity by the holder of bonds issued by a regularly organized state irrigation district, alleging that the directors of the district had made and collected assessments for the payment of interest on the bonds, but had defaulted in interest, and had cast a cloud on the title to the bonds by claiming that part of them had been issued without consideration or without adequate consideration, on the ground of its independent equitable jurisdiction over trustees.

[Ed. Note.—For other cases, see Courts, Cent. Dig. §§ 797, 798; Dec. Dig. ⚷262.]

7. EQUITY ⚷47—ADEQUATE REMEDY AT LAW—STATUTES.

In such case the District Court, though required by Judicial Code, § 267 (Comp. St. 1913, § 1244), to deny relief in equity in any case where adequate and complete remedy may be had at law, might take jurisdiction on the ground that the only available action at law to recover the interest due on the bonds as they became due did not afford a practical and efficient result.

[Ed. Note.—For other cases, see Equity, Cent. Dig. §§ 153-155; Dec. Dig. ⚷47.]

8. WATERS AND WATER COURSES ⚷227—OFFICERS OF IRRIGATION DISTRICT—BREACH OF TRUST.

The officers of an irrigation district who had assessed and collected money to pay the interest on its bonds and had failed to so apply it, might be sued at law for money had and received.

[Ed. Note.—For other cases, see Waters and Water Courses, Cent. Dig. § 318; Dec. Dig. ⚷227.]

Appeal from the District Court of the United States for the Southern Division of the District of Idaho; Frank S. Dietrich, Judge.

Bill by J. Paul Thompson against the Emmett Irrigation District and W. H. Shane and others, as directors, and R. B. Shaw, as treasurer. From an order dismissing the bill, complainant appeals. Order set aside, with direction to proceed with the case on the equity side of the court.

This is an appeal from an order of the District Court dismissing appellant's bill of complaint in equity. The appellant was plaintiff in the court below. The dismissal was upon the ground that the plaintiff had a plain, adequate, and complete remedy at law. The bill as amended alleged that the defendant Emmett Irrigation District was organized on or about the 13th day of September, 1910, under and pursuant to an act of the Legislature of the state of Idaho approved March 9, 1903, and the acts amendatory thereof; that at an election held on December 3, 1910, the electors of the district authorized an issuance of the bonds of the district in the amount of $1,100,000; that thereafter all the proceedings relating to the organization of the district and the authorization of the bonds were confirmed by the District Court having jurisdiction of the subject-matter, and upon appeal to the Supreme Court of the state the judgment of the District Court was affirmed; that thereafter the district, acting through its board of directors, caused the bonds of the district to be issued, sold, and delivered to the amount of $900,000; that said bonds were coupon bonds, negotiable in form and payable to bearer, and were issued as provided in section 2397 of the Revised Codes of Idaho; that, relying upon the decision of the Supreme Court of the state of Idaho adjudging and decreeing that the district had been legally organized, and that the bonds had been lawfully issued and were a valid and binding obligation of the district, and relying also upon the recitals contained in the bonds that the same had been issued in compliance with the laws of the state of Idaho, and that all things required to make the same the legal, valid, and binding obligations of said district had been done and had happened, and had been performed, the plaintiff, prior to January 1, 1914, without notice or knowledge of any fact whatsoever impairing the validity of said bonds, or any of them, purchased for a valuable consideration $101,000 of said bonds, and ever since has been the owner and holder thereof; and that after the said district had sold and delivered its said bonds, the board of directors of said district determined the benefits which would accrue to each of the tracts and subdivisions of land within the district on account of the purchase and construction of the irrigation works, and which were paid for by the proceeds from the sale of the said bonds, and said board, as directed by law, caused the cost of said works to be apportioned over each tract and subdivision of land in proportion to the benefits received; that the action of the board in apportioning such benefits was duly approved and confirmed by the District Court having jurisdiction thereof by a judgment and decree of the said court entered on the ——— day of June, 1913; that no appeal had been taken therefrom, and the decree had become final; that all interest coupons of said bonds maturing on January 1 and July 1, 1913, have been paid; that the interest coupons maturing January 1, 1914, have not been paid; that the plaintiff is the owner of interest coupons maturing on January 1, 1914, to the amount of $3,030; that on October 22, 1913, the board of directors of the district levied an assessment against all of the lands in the district for the payment of interest maturing January 1 and July 1, 1914; that a large number of the landholders and taxpayers of the district have paid the tax so levied and assessed against their said lands for the payment of interest on the bonds held by the plaintiff and the other bondholders; but the district and its treasurer and board of directors have failed and neglected to use any of the moneys so collected to pay the interest on said bonds maturing January 1, 1914, but have allowed default to be made in the payment of such interest; that the plaintiff caused to be presented to the treasurer of said district for payment the interest coupons maturing January 1, 1914, on his said bonds, amounting to $3,030, and

demanded payment thereof, but, notwithstanding the said treasurer had in his possession and in his custody and under his control the interest fund belonging to said district and collected as aforesaid from the taxpayers in said district for the purpose of paying such interest, he declined to pay the same, and said defendants have wrongfully and without cause declined to apply the moneys collected from the taxpayers of said district to the payment of the interest due on said bonds, or in payment of the coupons held by the plaintiff, and unless enjoined and restrained by the court the defendants will either return such money to the persons from whom the same was collected, or will divert such money from the interest fund and use it for other purposes, and will not apply it to the payment of interest, or to any purpose for the benefit of the holders of said bonds; that default in payment will be made by the said defendants from time to time as each installment of interest on said bonds becomes due and payable; that the principal of said bonds will mature serially, commencing on the first day of January, 1922, and extending over a period of 10 years, as provided in section 2397 of the Revised Codes of Idaho; that should the plaintiff and the other holders of said bonds be required to bring suit against the district as each installment of interest on said bonds matures, numerous suits will be required, and should the plaintiff be delayed in bringing suit until all of said bonds have become due and payable, great and irreparable injury will be sustained by the plaintiff and by all holders of said bonds because of loss of interest and the uncertainties and unsettled conditions for many years, which would destroy the market value of said bonds pending the determination of the liability of said district for the said bonds and said coupons; that it would be impossible for the said district and the taxpayers therein to pay the whole of said bond issue and the accumulated interest thereon by one levy or assessment; that the same can only be paid in installments extending over a long period, as provided in said bonds and as contemplated by the laws of the state of Idaho relating to such matters. The plaintiff further alleges that unless the defendants are restrained and enjoined by the court, they will not only divert or appropriate for other uses, or return to the taxpayers, the moneys collected for the payment of interest on said bonds, but will allow default to be made in the steps and proceedings required to be taken by them in order to make legal and valid the sale of property in said district for delinquent taxes, and will permit the taxpayers who have paid no taxes to wholly escape the penalties of default, and escape the payment of said taxes.

In an amendment to the bill it is alleged, among other things, that the defendants sometimes assert and charge that a portion of the said bonds, to wit, about one-fifth thereof, were issued and sold by the district without any consideration, or any adequate consideration, being paid therefor; but it is alleged that the defendants do not state or pretend to know which of said bonds were so issued, and do not identify them by number or otherwise, so that any of the present holders of said bonds, or any other person, can learn or ascertain what bonds defendants refer to as having been sold illegally or without adequate consideration, or any consideration, being paid therefor; that by reason of such general, vague, and indefinite charges against the outstanding bonds of said district a cloud is thrown upon the validity or legality of all of the bonds of said district, including the bonds held by the plaintiff, and the market value of all such bonds is thereby greatly depreciated, if not entirely destroyed. The plaintiff alleges that he brings this suit for himself and all other holders of bonds of said district who may desire to join in this proceeding and pay their proper proportion of the costs.

The remedy sought by the plaintiff is a temporary injunction pending the hearing, and a perpetual injunction thereafter, restraining the defendants from doing certain things mentioned, among others from diverting, or otherwise appropriating or using for any purpose other than for the purpose of payment of the interest on the bonds of said district, the moneys collected for or hereafter paid into the interest fund created for the payment of interest on the bonds of said district; and that the defendants be required to apply the moneys in said interest fund to the payment of the interest due on said bonds; and that upon final hearing it be adjudged and decreed that the

said bonds are legal and valid obligations of the district; and that the plaintiff herein have such other and further relief as the circumstances of the case may require and as the court shall deem just and equitable.

The defendants interposed a motion to dismiss the bill as amended, upon the objection that the plaintiff had a plain, speedy, and adequate remedy at law, to wit, an action at law against the defendant Emmett Irrigation District for judgment upon the defaulted coupons owned by the plaintiff, with the right to enforce such judgment, if one should be recovered, by a writ of mandate. The court below sustained this objection to the bill, but with leave to transfer the cause to the law side of the court as authorized by General Equity Rule No. 22 (198 Fed. xxiv, 115 C. C. A. xxiv). The plaintiff declining to make such transfer, the bill was ordered dismissed.

J. H. Richards, Oliver O. Haga, and McKeen F. Morrow, all of Boise, Idaho, for appellant.

J. M. Thompson, of Caldwell, Idaho, and Fremont Wood and Dean Driscoll, both of Boise, Idaho, for appellees.

Before GILBERT, ROSS, and MORROW, Circuit Judges.

MORROW, Circuit Judge (after stating the facts as above). [1-3] For the present purposes the allegations of the bill must be taken as true. They state a case for the removal of a cloud upon the title to personal property. It has been held that such a case is within the jurisdiction of a court of equity. 6 Pomeroy's Equity Jurisprudence, § 729; Sherman v. Fitch, 98 Mass. 59; Voss v. Murray, 50 Ohio St. 19, 32 N. E. 1112; Rosenbaum v. Foss, 4 S. D. 184, 56 N. W. 114; Stebbins v. Perry County, 167 Ill. 567, 47 N. E. 1048; Earle v. Maxwell, 86 S. C. 1, 67 S. E. 962, 138 Am. St. Rep. 1012; Magnuson v. Clithero, 101 Wis. 551, 77 N. W. 882; New York & New Haven Ry. Co. v. Schuyler, 17 N. Y. 592.

This jurisdiction is recognized as existing in a federal court of equity by section 8 of the act of March 3, 1875 (18 Stats. 472), incorporated into section 57 of the Judicial Code. Jellenik v. Huron Copper Min. Co., 117 U. S. 1, 20 Sup. Ct. 559, 44 L. Ed. 647; Louisville & Nashville Ry. Co. v. Western Union Tel. Co., 234 U. S. 369, 371, 34 Sup. Ct. 810, 58 L. Ed. 1356.

The refusal of the defendants to pay the interest coupons attached to the bonds of the district is based upon the claim that about one-fifth of the bonds issued and sold by the district were sold without consideration, or any adequate consideration, being paid therefor, but this claim is made without any statement as to which of said bonds were so issued, and without designating such bonds by number or otherwise so that the holders of the bonds generally can learn or ascertain which particular bonds the defendants claim to have been illegally issued, or issued without adequate consideration. This assertion or claim on the part of the defendants, and their refusal to pay the interest on any of the bonds, depreciates their value in the market and casts a cloud upon the title of the entire issue.

In the case of New York & New Haven Ry. Co. v. Schuyler, 17 N. Y. 592, the New York Court of Appeals had before it a similar state of facts relating to the stock of the corporation. Spurious stock had been issued and was in the hands of numerous persons. The stock on

its face was, in all respects, like the legally authorized stock. The existence of the spurious stock cast a cloud upon the title of the entire issue and greatly depreciated its market value. Suit was brought by the corporation for the purpose of removing the cloud cast upon the genuine certificates, and to secure a judgment determining which of the certificates were valid and which were invalid. The court, referring to the jurisdiction of courts of equity in such a case, said:

"There is no head of equity jurisdiction more firmly established than that which embraces the cancellation of instruments which are capable of a vexatious use after the means of defense at law may become impaired or lost, or when they are calculated to throw a cloud upon the title or interest of the party seeking relief. But the jurisdiction does not universally attach on the mere ground that the deed or other contract is invalid. * * * If * * * the invalidity does not appear on their face, the jurisdiction is not confined to instruments of any particular kind or class. Whatever their character, if they are capable of being used as a means of vexation and annoyance, if they throw a cloud upon title or disturb the tranquil enjoyment of property, then it is against conscience and equity that they should be kept outstanding, and they ought to be canceled. These principles of general jurisprudence are believed to be decisive in favor of the right of this corporation to demand the cancellation of the false stock and to maintain a suit in equity for that purpose. On their face, as we have seen, the certificates of this stock are undistinguishable from those which are genuine and true. They confer, therefore, upon each holder a prima facie right as a stockholder. The evidence of such right must, in every case, be repelled by showing that the certificate does not represent the actual stock of the company, and it is impossible to say that the means of repelling these claims will always be as perfect as they were when the frauds in which they originated were first discovered. * * *

"If, as we have held, no just claim against the corporation arises out of these certificates, it is plainly unconscientious and inequitable that they should be kept on foot. Their very existence, outstanding, is unjust, because it must, of necessity, exercise a most depressing influence upon the real stock of the corporation. We all know how sensitive are values in property of this description; and what conceivable facts could cast a deeper shadow over every genuine stockholder's interest than a spurious issue of $2,000,000 of stock, evidenced by certificates apparently valid, and under which every holder boldly and confidently asserted his claim? The fact is not alleged in the complaint, but we can scarcely err in supposing that, on the discovery of these frauds, every share of valid stock must at once have lost nearly one-half of its market value. That depression must continue, in a greater or less degree, while the certificates are allowed to stand. A decision against one of them in an action founded upon it is not a determination against any other one, and cannot, while the others are outstanding, restore to the genuine stock the value which justly belongs to it. To say that the shareholders must remain in such a condition of insecurity and doubt, and must hold their shares under such a depression, would be to sanction a species of injustice which ought to be prevented. These shares of stock are a description of property as much entitled to invoke the protective remedies peculiar to courts of equity as any other."

If a court of equity, upon the suit of the corporation, has jurisdiction, under the circumstances of the case cited, to cancel spurious stock as a cloud upon the title of an owner of genuine stock, it seems clear that a court of equity under similar circumstances would have jurisdiction of a suit to determine whether illegal bonds have been issued by a corporation, and, if so, by a proper decree to remove the cloud cast upon such issue and upon the title of the holders of the legal bonds of the corporation, and especially must this be so where, as in the present case, the bonds are to mature serially, and no bond

will mature, or become due and payable, until the 1st day of January, 1922, and until that date no judgment at law can be obtained on any of the bonds determining their validity.

[4] But there still remains the question whether a stockholder can institute such a suit where he has alleged that he brings the suit for himself and all other holders of bonds who may choose to join in the proceedings. We think he may, and there are cases supporting that view of the law.

In Stebbins v. Perry County, 167 Ill. 567, 47 N. E. 1049, the Supreme Court of Illinois had before it a suit in equity brought by a stockholder against Perry county, Ill., the holder of certain stock alleged to be illegal, and also against the Belleville & Southern Illinois Railway Company, a corporation charged with having issued the illegal stock. The purpose of the suit was to determine the validity of the stock held by Perry county. It was alleged that as long as Perry county was recognized as a stockholder and said stock remained uncanceled on the books of the company, the stock of the company was depreciated, and the complainant was in danger of losing his just share of the earnings and dividends of the company; that there was danger that said county would fraudulently assign or transfer said certificates of stock and thereby make necessary a multiplicity of suits to enforce and establish the complainant's rights. The complainant alleged that he brought the suit in his own behalf, as well as in behalf of all stockholders in the company who might join with him in the proceeding. The court held that the complainant had the right to invoke the equitable jurisdiction of the court to remove the cloud upon the title to his stock. We think the rule established by these two cases is in accordance with sound reasoning, and should be followed in the present case.

[5] But there is another ground of jurisdiction which we think was properly invoked in this case, and that is the jurisdiction which courts of equity exercise over trustees in the performance of their duties. The officers of the irrigation district stand in the relation of trustees for the bondholders of the district. The moneys collected by them from the taxpayers for the payment of the interest on the bonds constitute a trust fund which cannot be applied or diverted to any other purpose. They have collected money from the taxpayers for the payment of the interest on the bonds of the district, and they are not applying that money to such purpose. This is a diversion pro tanto of that fund, and they are chargeable with breach of trust for such diversion.

[6-8] But the defendants contend that the remedy is at law to recover the interest due upon the bonds, and upon the refusal of the defendants to pay the judgment, should a judgment be recovered, the plaintiff could proceed by mandamus to compel payment, and such proceeding would be a plain, adequate, and complete remedy. It is the duty of the court to give full force and effect to section 267 of the Judicial Code, providing that:

"Suits in equity shall not be sustained in any court of the United States in any case where a plain, adequate, and complete remedy may be had at law."

This was originally section 16 of the act of September 24, 1789 (1 Stat. 73–82, c. 20), afterwards incorporated into the Revised Statutes as section 723. It has been before the Supreme Court in numerous cases.

In Boyce v. Grundy, 3 Pet. 210, 7 L. Ed. 655, the court, referring to the original section, said:

"This court has been often called upon to consider the sixteenth section of the judiciary act of 1789, and as often, either expressly, or by the course of its decisions, has held that it is merely declaratory, making no alteration whatever in the rules of equity, on the subject of legal remedy. It is not enough that there is a remedy at law; it must be plain and adequate, or, in other words, as practical and efficient to the ends of justice and its prompt administration as the remedy in equity."

In the present case an action at law upon the bonds cannot be maintained until they become due seven years hence. In the meantime the breach of trust on the part of the defendants in failing to pay the interest on the bonds will depreciate their value, if the bonds and coupons do not become entirely valueless. In this situation, the present suit in equity will be practical, efficient, and prompt in determining once and for all the validity or invalidity of the bonds and coupons attached thereto, and it is manifest that a multiplicity of suits at law upon the coupons as they become due, the only present remedy at law, cannot afford such a practical and efficient result in the administration of justice. But we need not pursue this phase of the inquiry further, since we are dealing now with the element of trust, which has always been a ground of independent equitable jurisdiction.

In Taylor v. Benham, 5 How. (46 U. S.) 233, 274, 12 L. Ed. 130, the Supreme Court said:

"Every person who receives money to be paid to another, or to be applied to a particular purpose, to which he does not apply it, is a trustee, and may be sued either at law, for money had and received, or in equity, as a trustee, for a breach of trust."

This is precisely the position of the defendants in this case. They may be sued at law for money had and received, but they may also be sued in equity for breach of trust, if they have failed to perform their duties as trustee.

In Oelrichs v. Spain, 15 Wall. (82 U. S.) 211, 21 L. Ed. 43, the action was in equity to enforce liability for damages under injunction bonds. It was insisted that the complainant had a complete remedy at law, and that the bill should have been dismissed. In answering this objection the Supreme Court said:

"Upon looking into the record it is clear to our minds, not only that the remedy at law would not be as effectual as the remedy in equity, but we do not see that there is any effectual remedy at all at law. If the injunction bonds were sued upon at law, and judgments recovered, a proceeding in equity would still be necessary to settle the respective rights of the several obligees to the proceeds. The direct proceeding in equity will save time, expense, and a multiplicity of suits, and settle finally the rights of all concerned in one litigation. Besides, there is an element of trust in the case which, wherever it exists, always confers jurisdiction in equity."

In Wehrman v. Conklin, 155 U. S. 314, 15 Sup. Ct. 129, 39 L. Ed. 167, the bill was in equity to stay an action in ejectment and to remove a cloud upon the plaintiff's title to certain real estate. It was contended by the defendant that equity had no jurisdiction of the case by reason of the fact that the controversy related to legal title only, and that the plaintiff had a plain, adequate, and complete remedy at law. The court, referring to section 723 of the Revised Statutes, said:

"It was not intended to restrict the ancient jurisdiction of courts of equity, or to prohibit their exercise of a concurrent jurisdiction with courts of law in cases where such concurrent jurisdiction had been previously upheld."

In McKee v. Lamon, 159 U. S. 317, 322, 16 Sup. Ct. 11, 13 (40 L. Ed. 165), the court said:

"There can be no doubt of the general proposition that where money is placed in the hands of one person to be delivered to another, a trust arises in favor of the latter, which he may enforce by bill in equity, if not by action at law."

In Clews v. Jamieson, 182 U. S. 461, 479, 21 Sup. Ct. 845, 852 (45 L. Ed. 1183) the court said:

"The fact that the relief demanded is a recovery of money only is not important in deciding the question as to the jurisdiction of equity. * * * 'A court of equity will always, by its decree, declare the rights, interest, or estate of the cestui que trust, and will compel the trustee to do all the specific acts required of him by the terms of the trust. It often happens that the final relief to be obtained by the cestui que trust consists in the recovery of money. This remedy the courts of equity will always decree when necessary, whether it is confined to the payment of a single specific sum, or involves an accounting by the trustee for all that he has done in pursuance of the trust, and a distribution of the trust moneys among all the beneficiaries who are entitled to share therein.' "

The court refers to Oelrichs v. Spain, supra, as authority for the rule that, there being "an element of trust in the case," that element, "wherever it exists, always confers jurisdiction in equity."

To the same effect are the able and interesting decisions of Judge Shiras of the Northern District of Iowa, in Vickrey v. City of Sioux City (C. C.) 104 Fed. 164; Burlington Sav. Bank v. City of Clinton, Iowa (C. C.) 106 Fed. 269; Farson et al. v. City of Sioux City (C. C.) 106 Fed. 278.

In Jewell v. City of Superior, 135 Fed. 19, 67 C. C. A. 623, the suit was in equity. The city under its charter had issued municipal improvement bonds, and had pledged assessments levied upon property benefited therefor. There was a deficiency in the amount collected for such improvements, and the trial court had decreed that, on account of such deficiency the bondholder was entitled to such proportion of the moneys collected by the city as the amount of bonds of each class held by him bore to the total amount of bonds issued against each of the improvements. With respect to the action of the trial court in limiting the amount of recovery of the bondholder to his pro rata share of the fund to which the holders of all the bonds were entitled, the Court of Appeals said:

"This fund, derivable from the assessments, was a trust fund, pledged to the payment of all of the bonds. The right of the appellant therein was only to such portion of the fund realized as the sum of his bonds bore to the entire amount of the issue of bonds. It is true that equity favors the vigilant, not the slothful; but we think it would be a manifest perversion of equity to require a trustee to commit a breach of trust owing to other cestuis que trustent, by taking from other bondholders and awarding to the appellant so much of this fund as would pay his bonds in full. We know of no principle of equity which would warrant such a decree."

This case, presenting the question of equity jurisdiction with respect to a pro rata distribution of the fund in the hands of the trustees among the bondholders, touches an important question which appears to be involved in the present case, and illustrates the efficiency of equity jurisdiction as a remedy for questions of the character of those involved in the present case.

Counsel for the defendants cite cases where it has been held that a court of equity has no jurisdiction to compel municipal officers to levy taxes for the payment of bonds, either with or without a previous judgment at law. But that question is not now involved in this case, and may never be, and we do not think it necessary to discuss its possible application to future proceedings. Cases are also cited where actions against defaulting corporations on their bonds have been prosecuted to judgment at law, followed by a writ of mandamus, and it is contended that the remedy has been found to be plain, adequate, and complete. But in none of the cases cited was the remedy at law so remote and uncertain as in the present case, where an unavoidable delay of seven years in the bringing of an action at law upon the bonds may mean the loss of all the evidence on behalf of the plaintiff and the consequent destruction of all his rights; and, with the exception of the case of Hausmeister v. Porter, Treasurer (C. C.) 21 Fed. 355, in none of them is the concurrent jurisdiction of a court of equity expressly denied to afford relief, and in this excepted case we do not find that the question of a cloud on title and a breach of trust were suggested as grounds for equity jurisdiction.

We are therefore of opinion that the equitable jurisdiction of the court should be sustained for the reason that upon the facts alleged in the bill of complaint a case is stated for the removal of a cloud on the title to personal property, and involves an element of trust, and upon the whole case the remedy at law will not be as plain, adequate, and complete, nor as practical and efficient to the ends of justice as the present action.

The order of the District Court dismissing the bill of complaint will be set aside, with directions to proceed with the case on the equity side of the court. Costs to the appellant.

BANK OF WAYNESBORO v. RYAN.

(Circuit Court of Appeals, Eighth Circuit. September 13, 1915.)

No. 4396.

BILLS AND NOTES ⟹310—CONSTRUCTION—PART PERFORMANCE.

Pending an action by plaintiff on a note, plaintiff and defendant entered into a contract reciting that, in consideration of the total sum of $9,000, plaintiff "contracts to sell" to defendant the notes and a collateral contract and lien; that $500 was paid in cash and $8,500 was payable on or before a named date; that "in consideration of the payment of said $500, and the agreement to pay said sum of $8,500" plaintiff agreed to stipulate for a continuance of the pending suit until after the payment became due. On the next day an escrow agreement was made, by which the note and collateral contract, with an assignment thereof, were deposited with a bank, to be delivered to defendant on payment of the $8,500, the agreement providing that in case it was not paid at maturity plaintiff should "have the option" to withdraw the papers and retain any payments made as liquidated damages. Defendant having made default, plaintiff brought action on the contract to recover $8,500 and interest, alleging that it had stipulated for continuance of the prior action as provided therein and that the papers were still with the bank subject to the escrow agreement. *Held*, that the complaint stated a cause of action; that the contract was not one merely granting an option, nor one providing liquidated damages for its breach, but one of bargain and sale, binding on both parties, which by continuance of the pending action plaintiff had performed, so far as it was to be performed by it prior to payment by defendant.

[Ed. Note.—For other cases, see Bills and Notes, Cent. Dig. §§ 742, 743; Dec. Dig. ⟹310.]

Elliott, District Judge, dissenting.

In Error to the District Court of the United States for the District of Utah; John A. Marshall, Judge.

Action at law by the Bank of Waynesboro against T. D. Ryan. Judgment for defendant, and plaintiff brings error. Reversed.

J. D. Skeen, of Salt Lake City, Utah (D. A. Skeen and W. H. Wilkins, both of Salt Lake City, Utah, on the brief), for plaintiff in error.

Joseph Chez, of Ogden, Utah (David L. Stine, of Ogden, Utah, on the brief), for defendant in error.

Before HOOK, Circuit Judge, and ELLIOTT and YOUMANS, District Judges.

YOUMANS, District Judge. Plaintiff in error, hereafter called plaintiff, brought suit in the court below against the defendant in error, hereafter called defendant, on the following complaint, omitting caption and signature:

"Plaintiff complains of defendant and for cause thereof alleges:

"I. That the plaintiff is a banking corporation organized under and pursuant to the laws of the state of Pennsylvania, and is a resident and citizen of said state. That the defendant is a resident and citizen of the state of Utah.

"II. That on the 23d day of April, 1914, the plaintiff and defendant entered into a contract in writing in words and figures following to wit:

" 'In the District Court of the United States for the District of Utah.

" 'Bank of Waynesboro, a Corporation, Plaintiff, v. James Coal & Ice Company, a Corporation, Defendant.

" 'Stipulation.

" 'In consideration of the total sum of nine thousand ($9,000.00) dollars, the Bank of Waynesboro hereby contracts to sell to T. D. Ryan, as trustee, a certain negotiable promissory note dated October 31, 1911, for the sum of $9,562.50, due 18 months after said date, made, executed, and delivered by the James Coal & Ice Company, a corporation, to Frick Company, of Waynesboro, Pa., and by it sold and transferred to the Bank of Waynesboro, of Waynesboro, Pa.; also all right, title, and interest in and to that certain ice plant constructed at Ogden, Utah, by the said Frick Company for the said James Coal & Ice Company, pursuant to a contract between said parties, dated January 7, 1911, the title of said machinery being reserved in the said Frick Company until payment for the total contract price for the erection of said ice plant, and said note being evidence of one of the payments provided for by said contract.

" 'Said sum of nine thousand ($9,000.00) dollars is payable as follows: Five hundred ($500.00) dollars in cash, the receipt of which is hereby acknowledged, and eighty-five hundred ($8,500.00) dollars on or before the 1st day of July, 1914, the said eighty-five hundred ($8,500.00) dollars to bear interest from date hereof until paid at the rate of four (4%) per cent. per annum.

" 'In consideration of the payment of the said five hundred ($500.00) dollars and the agreement to pay the said sum of eighty-five hundred ($8,500.00) dollars, the said Bank of Waynesboro agrees to stipulate for the continuance of said case set for the 23d of April, 1914, until the said 1st day of July, 1914, and upon payment of the said sum of eighty-five hundred ($8,500.00) dollars on or before the said 1st day of July, 1914, the said Bank of Waynesboro agrees to transfer said note and its title to said machinery, and to relinquish all control over said litigation: Provided, however, that the said T. D. Ryan, as trustee, shall protect it against any cost or disbursements in said action, if the litigation is continued in the name of the said bank, and any such costs or disbursements are taxed against the said bank: Provided, that this agreement shall not be construed as an admission on the part of James Coal & Ice Company of the retention of title to said ice plant by the said Frick Company, and the transfer of it to the said Bank of Waynesboro, or the waiver of any rights to said title that the said James Coal & Ice Company may have, and shall operate only as a transfer of all rights to said note and property that the said bank may have therein.

" 'In witness whereof, the parties have hereunto set their hands this 23d day of April, 1914. [Signed] Bank of Waynesboro,

" 'By J. D. Skeen, Attorney.

" 'T. D. Ryan, Trustee.

" 'Approved:

" 'Joseph Chez, Attorney for James Coal & Ice Co.'

"III. That pursuant to the terms of said contract the plaintiff consented to the continuance of said case of Bank of Waynesboro, a corporation, plaintiff, against the James Coal & Ice Company, a corporation, defendant, then on call for trial in the above-entitled court, and said cause was continued upon the stipulation of the parties thereto and the defendant paid to plaintiff the sum of five hundred dollars ($500.00).

"IV. That to facilitate the consummation of said transaction, and to insure the delivery of the papers therein described, pursuant to said agreement, plaintiff and defendant entered into an agreement in writing, the same being in words and figures as follows:

" 'Ogden, Utah, April 24, 1914.

" 'The papers contained in the within envelope, and described hereafter, are left in escrow with the Security State Bank, Ogden, Utah, by Waynesboro

Bank, party of the first part, and T. D. Ryan, trustee, party of the second part, to this escrow agreement.

" 'Description of papers:

" 'One note dated Oct. 31, 1911, for $9,562.50, from James Coal & Ice Company to Frick Company, and indorsed to Bank of Waynesboro; also contract between Frick Company and James Coal & Ice Company for construction of ice plant, Ogden, Utah, dated January 7, 1911, and assignment of contract to Bank of Waynesboro.

" 'The said Security State Bank, Ogden, Utah, is hereby empowered and directed to deliver the above-described papers to T. D. Ryan, trustee, party of the second part, or order, only upon the payment to them of the sum of $8,500.00, * * * 4% interest, for account of the said Bank of Waynesboro, payable as follows: July 1, 1914.

" 'Received above-described escrow, with inclosures.

" 'Security State Bank, Ogden, Utah,
" '[Signed] F. J. Vicks, Cashr.

" 'In case the terms of this escrow shall be fulfilled, then this agreement shall terminate and be null and void; however, in case the party of the second part shall fail to make the payment at maturity as aforesaid, and for a period of 15 days thereafter, then and in that case the said party of the first part shall have the option, if he so desires, to withdraw the above-described papers, and shall retain any and all sums of money which may have been paid thereon by the said party of the second part as liquidated damages, and the Security Trust & Savings Bank, Odgen, Utah, shall be released from the trust herein created, and from any further responsibility in this matter.

" 'Bank of Waynesboro,
" 'By J. D. Skeen, Att'y.
" 'T. D. Ryan, Trustee.

" 'Signed this 24th day of April, 1914.'

"V. That, in accordance with and pursuant to said last-mentioned agreement, plaintiff and defendant deposited with the Security State Bank of Ogden, Utah, of which the said defendant was president and manager, the said note, contract, and assignment of the said contract from the Frick Company to the Bank of Waynesboro, and authorized and directed the said Security State Bank to deliver said papers to the defendant upon payment of the sum of eighty-five hundred dollars ($8,500.00), with interest as therein provided, on or before the 16th day of July, 1914; that such authority has not been revoked, and plaintiff has in all respects fully performed its said contract, and has often demanded that defendant make payment of said eighty-five hundred ($8,500.00), with interest as provided in said contract.

"VI. That the defendant has failed and neglected to make payment of the said sum of eighty-five hundred dollars ($8,500.00), with interest as aforesaid, or any part thereof.

"Wherefore plaintiff prays judgment against the defendant for the sum of eighty-five hundred dollars ($8,500.00), with interest thereon at the rate of four per cent. per annum from the 23d day of April, 1914, and for costs of this proceeding."

Defendant filed to that complaint the following demurrer:

"Now comes the defendant in the above-entitled action and demurs to plaintiff's complaint on file herein, and for his ground of demurrer, alleges:

"(1) That there is another action pending between the same parties for the same cause, in this: That the above-purported action is based upon a certain contract entered into between Frick Company, of Waynesboro, Pa., and James Coal & Ice Company, of Ogden, Utah, which contract was subsequently assigned over by the said Frick Company to the above-entitled plaintiff; that the above-named defendant subsequently assigned its right to T. D. Ryan, trustee, defendant herein, all of which appears from the face of the complaint, and that the original action, instituted in the above court and now pending therein, is the same action set out in plaintiff's above complaint, and seeks to recover on the same contract heretofore entered into by Frick Company and

James Coal & Ice Company, and on which an action is now also pending, and that said action is a complete bar to the above and present action.

"(2) That the complaint does not state facts sufficient to constitute a cause of action against this defendant, among other grounds: That the plaintiff is seeking to enforce a certain agreement entered into between the above-named plaintiff and T. D. Ryan, trustee, while the action is instituted against T. D. Ryan individually.

"Wherefore defendant asks that plaintiff's complaint be dismissed, and that defendant have his costs herein expended."

The demurrer was sustained by the court, and the order thereon was as follows:

"This cause having been heretofore submitted on demurrer of defendant to the complaint herein, and by the court taken under advisement, now, after due consideration, it is ordered that said general demurrer be and it hereby is sustained."

By the use of the term "general demurrer" in the order it must be understood that the demurrer was sustained on the second ground; that is, that the complaint did not state facts sufficient to constitute a cause of action against the defendant. This is confirmed by statements made in the brief of each party. In plaintiff's brief appears the following:

"No written opinion was handed down, but from oral comments it appeared that the demurrer was sustained upon the theory that the contract was wholly executory, that plaintiff's only remedy was to retake possession of the property and sue for damages for breach of contract, that such damages were liquidated and limited by the contract to the amount paid, and that therefore no cause of action existed."

In defendant's brief appears the following:

"The court sustained the demurrer upon the theory and upon the ground, stated orally, that the contract as evidenced by the stipulation and escrow agreement was wholly executory, that the plaintiff's remedy was to retake possession of the property and sue for damages for breach of contract, that such damages were liquidated and limited by the contract to the amount paid, or $500, and that therefore no cause of action existed."

The plaintiff elected to stand on its complaint. An order dismissing the complaint was entered, and plaintiff sued out a writ of error.

The entire agreement, according to the allegations of the complaint, is evidenced by the stipulation and escrow agreement. The first paragraph of the stipulation recites that in consideration of $9,000 the plaintiff "contracts to sell" to defendant a promissory note and all interest in a certain ice plant to which title had been reserved. The second paragraph of the stipulation provides that $500 should be paid in cash and $8,500 on or before the 1st day of July, 1914. The third paragraph of the stipulation says:

"In consideration of the payment of the said five hundred ($500.00) dollars and the agreement to pay the said sum of eighty-five hundred ($8,500.00) dollars the said Bank of Waynesboro agrees to stipulate for the continuance of said case set for the 23d of April, 1914, until the said 1st day of July, 1914," etc.

The third paragraph of the complaint alleges that said case was continued upon the stipulation of the parties thereto, and the defendant paid the plaintiff the sum of $500. It is thus seen that by the third paragraph of the stipulation it is agreed that in consideration of the

cash payment of $500 and "the agreement to pay" $8,500, with interest, on or before the 1st day of July, 1914, the plaintiff agreed to continue the case to the 1st day of July, 1914. The third paragraph of the complaint alleged that the case was continued, pursuant to the terms of the contract. As to that portion of the contract nothing remained to be done. It was fully executed.

In so far as the transfer of the note was concerned, the provisions of the stipulation clearly indicate that it was the intention that the note and contract should remain the property of plaintiff until payment was made in full. The provisions of the stipulation are modified and added to by the terms of the escrow agreement of April 24, 1914. That agreement recites that the note, contract, and assignment were left in the possession of the Security State Bank "by the Waynesboro Bank, the party of the first part, and T. D. Ryan, trustee, party of the second part." According to the terms of the stipulation of April 23, 1914, the defendant had no control of the papers. By the agreement of April 24th he unites with the plaintiff to leave the papers with the bank. According to the allegations of the fourth paragraph of the complaint, the second agreement was made "to facilitate the consummation of said transaction and insure the delivery of the papers." The escrow agreement further provided that, in the event the defendant failed to make the payment at maturity and for a period of 15 days thereafter, "then and in that case the said party of the first part shall have the option, if he so desires, to withdraw the above-described papers, and shall retain any and all sums of money which may have been paid thereon by the said party of the second part as liquidated damages." Upon default in payment the plaintiff had "the option," if it should desire, "to withdraw" the papers. The option was to exercise a choice to withdraw the papers or not to withdraw them. If it elected to withdraw them, it took the amount paid as liquidated damages. If it did not elect to withdraw them, it did not take the amount as liquidated damages. If, as a matter of fact, it did exercise its option and withdraw the papers, that was a matter of defense to be set up by answer.

The fifth paragraph of plaintiff's complaint alleges that the papers were deposited with the Security State Bank pursuant to the agreement and with the authority to deliver them to defendant on payment by him of $8,500 and interest and that such authority had not been revoked. By the terms of the stipulation the payment of the $9,000 was in consideration of two separate and distinct things: First, the contract to sell the note and reservation of title; and, second, the continuance of the case. The performance of the two, however, were not, by the terms of the contract, made dependent upon each other. There was one recital with reference to the contract to sell the note, and a separate and distinct recital with reference to the agreement to continue the case. According to the allegations of the complaint, the latter agreement was fully complied with. A right of action in favor of plaintiff accrued upon default in the payment of $8,500. The escrow agreement added an additional element to the contract. It gave the plaintiff the option upon default to repossess itself of the papers and to retain whatever had been paid as liquidated damages.

The complaint was not subject to demurrer. The judgment of the lower court is therefore reversed, and the cause is remanded, with directions to overrule the demurrer and to proceed in accordance with law.

ELLIOTT, District Judge, dissents.

RUDEBECK et al. v. SANDERSON et al.

In re NONPAREIL CONSOL. COPPER CO.

(Circuit Court of Appeals, Ninth Circuit. November 8, 1915.)

No. 2624.

1. BANKRUPTCY ⚷43—CORPORATIONS—POWER OF DIRECTORS TO AUTHORIZE VOLUNTARY PETITIONS.

   In the absence of any restrictive provision in the laws of the state or in its charter, the board of directors of a corporation may authorize the filing of a petition in voluntary bankruptcy.

   [Ed. Note.—For other cases, see Bankruptcy, Cent. Dig. § 38; Dec. Dig. ⚷43.]

2. BANKRUPTCY ⚷43—CORPORATIONS—MOTION TO DISMISS PROCEEDINGS—LACHES.

   Stockholders, who with knowledge of the filing of a voluntary petition in bankruptcy by a corporation have permitted the administration of the estate to proceed for fifteen months, cannot then object on the ground that the petition was not duly authorized.

   [Ed. Note.—For other cases, see Bankruptcy, Cent. Dig. § 38; Dec. Dig. ⚷43.]

Petition for Review from the District Court of the United States, for the Northern Division of the Western District of Washington; Edward E. Cushman, Judge.

In the matter of the Nonpareil Consolidated Copper Company, bankrupt, with W. P. Sanderson as trustee. From an order dismissing their petitions to vacate the adjudication, N. Rudebeck, R. H. Ramsay, and Dora A. Ramsay petition for review. Affirmed.

E. H. Guie and J. A. Guie, both of Seattle, Wash., for petitioners.
Wm. Hickman Moore, of Seattle, Wash., for respondents.

Before GILBERT and ROSS, Circuit Judges, and RUDKIN, District Judge.

RUDKIN, District Judge. The Nonpareil Consolidated Copper Company, a Washington corporation, filed its voluntary petition in bankruptcy in the court below on the 28th day of February, 1914. The petition averred, among other things:

That the corporation "had its principal office for the greater portion of six months next immediately preceding the filing of this petition at 410 American National Bank Building, Everett, Wash., within said judicial district; that it owes debts which it is unable to pay in full; that it is willing to surrender all its property for the benefit of its creditors, except such as is exempt by

---

⚷For other cases see same topic & KEY-NUMBER in all Key-Numbered Digests & Indexes

law, and is desirous of obtaining the benefits of the acts of Congress relating to bankruptcy, *and its board of directors has duly authorized such acts on its part.*"

The petition was verified by the president of the corporation, who made oath that he was duly authorized by resolution of the board of trustees of the corporation to execute the petition for and in its behalf for the purposes therein set forth. On the 4th day of March, 1914, the prayer of the petitioner was granted, and the order of adjudication followed. The matter was then referred to the referee, appraisers were appointed, and costs of administration were ordered paid from time to time. On the 24th day of June, 1915, one Rudebeck, a stockholder of the corporation, filed a petition to vacate and set aside the order of adjudication, and to restrain the referee and trustee from selling or otherwise disposing of the assets of the corporation. A similar petition was filed by one R. H. Ramsay, another stockholder on the 29th day of June, 1915, and an intervening petition by one Dora A. Ramsay, another stockholder, on the 8th day of July, 1915. After the filing of the first two petitions, on the 29th day of June, 1915, the court made an order restraining the referee and trustee from executing a deed of the assets of the corporation, which had already been sold, until a hearing could be had on the 7th day of July, 1915. On the 6th day of July, 1915, a motion to dismiss the petitions and the petition in intervention was filed by the trustee, and on the 8th day of July, 1915, the motion to dismiss was granted, and the restraining order dissolved. The present petition was thereupon filed for a revision of the order dismissing the petitions and dissolving the restraining order.

[1] The petitions and intervening petition to vacate the order of adjudication were interposed on the ground that the filing of the voluntary petition was not authorized by vote of the stockholders of the company.

"The power of a corporation to execute and file a voluntary petition may be exercised by the same officers who have power under the laws of the state in which it is chartered to make a general assignment for the benefit of creditors or to convey or mortgage corporate property. In the absence of statute or by-laws regulating the subject, such power resides in the board of directors. It may be said generally that the president or other officer of a corporation has not the power on his own authority to execute a voluntary petition, but the board of directors may authorize the corporate officer to execute and file a petition on behalf of the corporation. In some states the general power of alienation is restrained either by the particular act creating the corporation or by general statute. In states where a vote of the stockholders is required to authorize a general assignment, or to convey or mortgage corporate property, a vote of the stockholders is necessary to authorize the corporation to file a voluntary petition in bankruptcy." Loveland on Bankruptcy (4th Ed.) 339.

The rule that the power to authorize the filing of a petition in bankruptcy is vested in the board of trustees or directors, in the absence of statute or by-laws regulating the subject, is fully supported by the authorities. In re Lisk Mfg. Co. (D. C.) 167 Fed. 411; In re Moench & Sons, 130 Fed. 685, 66 C. C. A. 37; In re Mutual Mercantile Agency Co. (D. C.) 111 Fed. 152; Cresson, etc., Coke Co. v. Stauffer, 148 Fed. 981, 78 C. C. A. 609; In re Marine Machine & Conveyor Co. (D. C.)

91 Fed. 630; In re Kelly Dry Goods Co. (D. C.) 102 Fed. 747; In re Rollins Gold & Silver Mining Co. (D. C.) 102 Fed. 982; Dodge v. Kenwood Ice Co., 204 Fed. 577, 123 C. C. A. 103.

The public statutes of Massachusetts provide that no conveyance or mortgage of its real estate, or lease thereof for more than one year, shall be made by a corporation unless authorized by a vote of the stockholders at a meeting called for that purpose, and that corporations may apply by petition, signed by an officer duly authorized by a vote of a majority of the incorporators present and voting at a legal meeting called for that purpose, for the initiation of proceedings in insolvency against the corporation. By reason of these statutory provisions, it was held in Re Bates Machine Co. (D. C.) 91 Fed. 625, that the board of directors of a Massachusetts corporation could not commit an act of bankruptcy by written admission of the corporation's inability to pay its debts and its willingness to be adjudged a bankrupt on that ground, but that such admission must be authorized by the stockholders.

The Oregon statute (L. O. L. § 6701) provides that:

"Any corporation organized under the provisions of this chapter [pertaining to private corporations] may, at any meeting of the stockholders which is called for such purpose, by vote of the majority of the stock of any such corporation, increase or diminish its capital stock, or the amount of the shares thereof, or authorize the dissolution of such corporation, and the settling of its business and disposing of its property and dividing its capital stock in any manner it may see proper."

In Re Quartz Gold Mining Co. (D. C.) 157 Fed. 243, it was held that by reason of the provision authorizing the stockholders of a private corporation to institute proceedings for its dissolution, the settling of its business, and the disposing of its property, the stockholders alone could commit an act of bankruptcy, by admitting in writing the corporation's inability to pay its debts and its willingness to be adjudged a bankrupt on that ground. The latter decision was affirmed by this court in Van Emon v. Veal, 158 Fed. 1022, 85 C. C. A. 547. It was conceded in these cases, however, that the general rule is otherwise. Thus, in the Bates Machine Company Case, Judge Lowell said:

"At this time, however, it is pretty well settled by authority that, under ordinary statutes or charters, the authority to make a general assignment does inhere in a board of directors. See Thomp. Corp. § 6473, Mor. Priv. Corp. § 240, Ang. & A. Corp. (11th Ed.) § 299, and the cases cited in these text-books."

Indeed, such power in the board of trustees seems to be tacitly recognized by the Supreme Court of the state of Washington in Nyman v. Berry, 3 Wash. 734, 29 Pac. 557, McKay v. Elwood, 12 Wash. 579, 41 Pac. 919, and Cerf & Co. v. Wallace, 14 Wash. 249, 44 Pac. 264. It is stated in one of the opinions that the assignment was authorized by vote of the stockholders, but no importance seems to have been attached to this allegation. If the board of trustees may make a general assignment for the benefit of creditors, the board may also file a voluntary petition in bankruptcy, for the result is the same, whether the property of the corporation is turned over for the benefit of creditors under the one proceeding or the other.

We find no restrictive provisions in the laws of the state of Washington such as exist in the laws of Massachusetts and Oregon. Section 3704 of Rem. & Bal. Code provides for increasing or diminishing the capital stock of a corporation, when authorized by a vote of two-thirds of all the shares of the company; but that provision has no bearing upon the question now under consideration. Section 3708 of the same Code provides for the dissolution of corporations when authorized by vote of two-thirds of all the stockholders; but a corporation can only be dissolved under that section when the court is satisfied that all claims against it have been discharged, and the statute can have no application to insolvent concerns. Furthermore, a corporation is not dissolved by a general assignment, or by bankruptcy proceedings, unless the state statute expressly so provides. True, the dissolution of a corporation, or an abandonment of the corporate enterprises, often follows insolvency, but not as a legal consequence. The board of trustees are the managing agents of the corporation, they are familiar with its affairs, and when the corporation becomes insolvent its assets become a trust fund for the payment of creditors. It is the duty of the trustees to see that this trust fund is not dissipated, and the filing of a voluntary petition in bankruptcy is an appropriate means to that end. We are therefore of opinion that the filing of the voluntary petition in this case was authorized by competent authority.

[2] But in any event the petition for revision should be dismissed. As already stated, the adjudication was made on the 4th day of March, 1914, and the first petition to vacate the order was not filed until the 24th day of June, 1915. The petitioner Rudebeck had notice of the adjudication as early as March 23, 1914, because on that date he filed his claim against the corporation with the referee in bankruptcy. When the other petitioners received notice of the adjudication does not appear; but they could not stand idly by and permit the administration of the estate to proceed in the bankruptcy court until some step was taken that did not meet their approval. Whether the petition in bankruptcy was filed by competent authority or not, it was the duty of the petitioners to move against it promptly, if at all, and this they failed to do. In re First National Bank, 152 Fed. 64, 81 C. C. A. 260, 11 Ann. Cas. 355; In re Ives, 113 Fed. 911, 51 C. C. A. 541; In re Urban & Suburban Realty Co. (D. C.) 132 Fed. 140.

The petition for revision is dismissed, with costs to the respondents.

SCANDINAVIAN-AMERICAN BANK v. SABIN.

In re SONDHEIM.

(Circuit Court of Appeals, Ninth Circuit. October 25, 1915.)

No. 2615.

1. BANKRUPTCY ⟹440—APPELLATE PROCEEDINGS—MODE OF REVIEW.
A controversy between a trustee and an adverse claimant of property, who was in possession at the time of the bankruptcy, but pursuant to stipulation turned it over to the trustee for sale, is one arising in a bankruptcy proceeding, and reviewable by appeal, under Bankr. Act July 1, 1898, c. 541, § 24a, 30 Stat. 553 (Comp. St. 1913, § 9608).

[Ed. Note.—For other cases, see Bankruptcy, Cent. Dig. § 915; Dec. Dig. ⟹440.

Appeal and review in bankruptcy cases, see note to In re Eggert, 43 C. C. A. 9.]

2. BANKRUPTCY ⟹188—PROPERTY PASSING TO TRUSTEE—VALIDITY OF LIEN.
Under Bankr. Act 1898, § 47a (2), as amended by Act June 25, 1910, c. 412, § 8, 36 Stat. 840 (Comp. St. 1913, § 9631), vesting a trustee, as to all property in the custody of the court, with all the rights, remedies, and powers of a creditor holding a lien by legal or equitable proceedings thereon, an agreement under which a creditor claims property, which might be good as against the bankrupt, may not be as against his trustee.

[Ed. Note.—For other cases, see Bankruptcy, Cent. Dig. §§ 270, 286–289, 291–295; Dec. Dig. ⟹188.]

3. CHATTEL MORTGAGES ⟹9—FORM OF INSTRUMENT.
An agreement under which a bank advanced to bankrupt the money to buy a stock of goods, and which provided that he should take title as trustee for the bank in so far as necessary to protect the bank and pay back the money he owed to it, *held* in effect a chattel mortgage.

[Ed. Note.—For other cases, see Chattel Mortgages, Cent. Dig. §§ 14, 15; Dec. Dig. ⟹9.]

4. COURTS ⟹366—FEDERAL COURTS—STATE LAW AS RULE OF DECISION.
In determining the validity of chattel mortgages in bankruptcy proceedings, a federal court will follow the settled law of the state.

[Ed. Note.—For other cases, see Courts, Cent. Dig. §§ 954–957, 960–968; Dec. Dig. ⟹366.

State laws as rules of decisions in federal courts, see notes to Wilson v. Perrin, 11 C. C. A. 71; Hill v. Hite, 29 C. C. A. 553.]

5. BANKRUPTCY ⟹184—CHATTEL MORTGAGE—VALIDITY.
Under the law of Oregon as settled by decision, when it appears either from the face of the mortgage or by parol evidence aliunde that a mortgagee of personal property has given the mortgagor unlimited power and authority to dispose of the property in the usual course of trade, without accounting therefor, the mortgage is void as to attaching creditors, even though there was no actual fraudulent intent, and it is equally void as to the trustee in bankruptcy of the mortgagor.

[Ed. Note.—For other cases, see Bankruptcy, Cent. Dig. §§ 275–277; Dec. Dig. ⟹184.]

Petition for Revision of, and Appeal from, an Order of the District Court of the United States for the District of Oregon, in Bankruptcy; Robert S. Bean, Judge.

In the matter of D. Sondheim, bankrupt, with R. L. Sabin, as trustee. Petition to revise and appeal by Scandinavian-American Bank from an order denying its claim to a lien. Affirmed.

This is a controversy between R. L. Sabin, trustee in bankruptcy of the estate of D. Sondheim, bankrupt, and the Scandinavian-American Bank, a corporation, respecting the ownership of a certain stock of goods and merchandise. The material facts are not in dispute. On or about the 22d day of October, 1914, Sondheim, who was engaged in the business of buying and selling bankrupt stocks of merchandise, was in debt to the bank in the sum of about $2,600, represented by three promissory notes. Being desirous of purchasing a certain bankrupt stock of merchandise, he on the date above mentioned applied to the bank for an additional loan of $2,600. The loan was made by the bank, whereupon Sondheim gave to the bank his note for the amount, and at the same time entered into an agreement with it, the material recitals of which are as follows:

"Whereas, the Scandinavian-American Bank has furnished to D. Sondheim, the sum of $2,600, to be used to purchase the goods, wares, and merchandise of the store located at 146 Sixth street, Portland, Oregon, under an agreement to protect the said party of the second part [the bank], absolutely on said purchase: Now, therefore, said agreement is hereby reduced to writing and executed between the parties of the first and second part in the following manner and form, to wit:

"It is understood and agreed between the parties hereto that the goods, wares, and merchandise heretofore named were purchased with the money furnished by the party of the second part, and that said D. Sondheim holds title in the same as trustee for the said party of the second part, in so far as the holding of said title is necessary to protect and pay back to the party of the second part the sums of money owing by the party of the first part to the party of the second part.

"It is understood and agreed that the party of the first part shall proceed to sell the goods, wares, and merchandise in the regular course of business, and shall keep an account of each day's sales, and one-half of the moneys taken in for the sale of said goods at the close of each day shall be turned over to the party of the second part at the opening of its banking hours the following day, until such time as the $2,600 advanced by the party of the second part, and any other indebtedness to the extent of $2,600 owing by the party of the first part to the party of the second part shall have been fully paid and satisfied.

"It is further understood that the party of the second part shall have the right to install a cashier, whose wages shall be paid as part of the running expenses of the business by the party of the first part, to keep track of the receipts and disbursements from the sale of said merchandise, and to be cashier in charge of all moneys handled during said sale; said party to have access to all books, records, bills, and invoices in connection with the said business heretofore referred to, and the sale and disposal of the same.

"It is further stipulated that no sale of the bulk of said articles, goods, wares, and merchandise first above named, shall be made without the consent of the party of the second part."

The agreement was never recorded. Sondheim thereupon purchased the stock of goods and merchandise, opened a store, and proceeded to sell the same, and continued to sell the same up to and including about the 13th day of November, 1914.

Both the referee and the court below found, and, indeed, it is not disputed, that during this period Sondheim was in possession of the stock of merchandise as sole and exclusive owner; that no account of sales was rendered by him to the bank; that the proceeds from sales were deposited by him in the bank to his own credit in the ordinary course of business, and commingled with funds received from other sources; that the account was at all times subject to his check; and that he was permitted to and did make large additional purchases of merchandise, claims for which are included in the bankruptcy proceedings in the court below; that the clause in the agreement to

the effect that Sondheim should keep an accurate account of each day's sales, and should turn over to the bank one-half of the moneys taken in for the sale of the goods at the close of each day, and also the clause respecting a cashier to be installed by the bank to keep track of receipts and disbursements, were, by consent of the parties, disregarded and not enforced.

On November 13, 1914, actions were brought by certain creditors of Sondheim, and writs of attachment were issued thereunder. On the same date the bank, learning of the attachments, and before the same could be levied upon the stock of merchandise in controversy, entered Sondheim's store and took possession of the merchandise, and placed in charge thereof one of its representatives. Three days later involuntary proceedings in bankruptcy were instituted in the court below, and a receiver was appointed to take charge of the assets of the estate. Subsequently the receiver filed a petition in the bankruptcy proceedings, claiming that the merchandise in question was an asset of the estate, and asking for an order directing the bank to deliver the stock to him forthwith, and to account to him for the proceeds of such part thereof as had been sold by the bank. By stipulation of the parties, approved by the court, the goods were delivered to the receiver and by him sold, and the proceeds deposited with the bank to await the action of the court in the present proceeding. Such proceedings were thereupon had in the court below that on the 21st day of May, 1915, the court made and entered its decree directing the payment of the moneys representing the proceeds of the sale of the stock to the trustee, who had succeeded the receiver, for the benefit of the creditors of the bankrupt estate. From the decree the bank has prosecuted an appeal, and also seeks to have it reviewed by this court by petition to revise under section 24b of the Bankruptcy Act.

Sidney J. Graham, of Portland, Or., for petitioner and appellant.

Sidney Teiser and Roscoe C. Nelson, both of Portland, Or., for respondent and appellee.

Before GILBERT, ROSS, and MORROW, Circuit Judges.

MORROW, Circuit Judge (after stating the facts as above). [1] 1. We are of opinion that the question at issue presents a controversy arising in the course of bankruptcy proceedings, and is appealable under section 24a of the Bankruptcy Act (Act July 1, 1898, 30 Stat. 553). Hewit v. Berlin Machine Works, 194 U. S. 296, 24 Sup. Ct. 690, 48 L. Ed. 986; In re First National Bank, 135 Fed. 62, 67 C. C. A. 536; In re Mueller, 135 Fed. 711, 68 C. C. A. 349. The petition for revision will therefore be dismissed.

[2] 2. To the contention of the appellant that the trustee is without authority to maintain the proceeding, for the reason that no creditor had secured a lien upon the goods at the time the bank took possession of them, and hence the trustee secured no greater rights than the bankrupt himself had, it is only necessary to state that section 8 of the act of June 25, 1910, amending section 47 of clause 2 of the act of 1898 (36 Stat. 840), provides that the trustee, "as to all property in the custody * * * of the bankruptcy court, shall be deemed vested with all rights, remedies, and powers of a creditor holding a lien by legal or equitable proceedings thereon." Under this provision of the statute the trustee is not limited to such objections to a transaction between the bankrupt and a creditor as the bankrupt might have had, but he may make any objection that a creditor holding a lien might make. An agreement, therefore, which prior to this amendment would have been valid between the parties, may not be valid as against the trustee. Meier & Frank Co. v. Sabin, 214 Fed. 231, 233, 130 C. C. A. 605.

[3] 3. Passing to the merits of the case, it is obvious that the determination of the issues involved depends upon the construction to be placed upon the instrument of October 23, 1914, executed by Sondheim and the bank, and its validity as against the creditors of the bankrupt estate. The instrument on its face purports to be a trust agreement, vesting in the bankrupt title to the goods in suit as trustee for the bank "in so far as the holding of said property is necessary to protect and pay back to the party of the second part [the bank], the sums of money owing by the party of the first part to the party of the second part." And by the paragraph immediately following it sufficiently appears that the "sums of money owing by the party of the first part to the party of the second part" include not only the $2,600 borrowed for the purchase of the goods and merchandise in suit, but also the indebtedness of $2,600 owing by Sondheim to the bank at the time of the execution of the document. But we are of opinion that, regardless of the phraseology employed, the instrument was intended to be and is a chattel mortgage. Indeed, as pointed out by the referee, it could be nothing else under the laws of Oregon; for it must be remembered that title to the goods was never in the bank. It vested directly and exclusively in Sondheim at the time of the purchase of the goods and merchandise by him. That being true, it is obvious that the instrument, as between the bank and Sondheim, cannot be construed as a conditional sale, as claimed by the bank. The construction of the instrument is not to be found in any name which the parties may have given to it, and not alone in any particular provisions it may contain. Herryford v. Davis, 102 U. S. 235, 244, 26 L. Ed. 160. But regardless of the classfication, if the instrument were executed with intent to hinder, delay, or defraud creditors of Sondheim, or if subsequent to its execution, by the conduct and acts of the parties, it became in their hands an instrument calculated to hinder, delay, or defraud creditors, it is void as against such creditors.

[4, 5] In determining the validity of chattel mortgages in bankruptcy proceedings, the federal court will follow the settled law of the state in which the transaction occurred. In re First National Bank, 135 Fed. 62, 67 C. C. A. 536. The Supreme Court of Oregon has consistently held that when it appears either upon the face of the mortgage, or by parol evidence aliunde, that a mortgagee of personal property has given the mortgagor unlimited power and authority to dispose of the property in the usual course of trade, the mortgage is void as to attaching creditors, even though there was no actual fraudulent intent on the part of either of the parties to the instrument. Orton v. Orton, 7 Or. 478, 33 Am. Rep. 717; Jacobs v. Ervin, 9 Or. 52; Bremer v. Fleckenstein, 9 Or. 266; Aiken v. Pascall, 19 Or. 493, 24 Pac. 1039; Fisher v. Kelly, 30 Or. 1, 46 Pac. 146; Sabin v. Wilkin, 31 Or. 450, 48 Pac. 425, 37 L. R. A. 465; Greig v. Mueller, 66 Or. 27, 133 Pac. 94, 46 L. R. A. (N. S.) 722; Peterson v. Sabin, 214 Fed. 234, 130 C. C. A. 608. The only qualification placed upon this rule is that laid down in the case of Currie v. Bowman, 25 Or. 364, 35 Pac. 848. It was there held that chattel mortgages on goods, although permitting the mortgagor to remain in possession and sell the same in the ordinary course of trade, may be upheld, where the mortgagee is required to keep a strict account of sales,

and pay over the proceeds thereof to the mortgagor, and the conduct of the mortgagee indicates that he intends the terms of the mortgage to be observed.

In the present case, by express terms of the agreement, Sondheim was permitted to sell the goods in the regular course of business. There can be no doubt that the rule laid down is directly applicable. But the bank contends that the case falls within the qualification or exception stated in Currie v. Bowman, for the reason that the instrument provided for an accounting on the part of the bankrupt at the close of each day to the extent of one-half of the proceeds of the sales, and also provided for the installing of a cashier by the bank to keep track of the receipts and disbursements. But it is not denied that these terms and restrictions were abandoned by mutual consent. One payment only, of $500, was made by Sondheim to the bank on account of the indebtedness during the three weeks in which he was in control of the stock. There is testimony to the effect that by a verbal agreement with Sondheim the bank had the privilege of charging his account with one-half of the proceeds of sales on certain dates, and in the exercise of that privilege his account was charged by the bank with the sum of $365 on November 12th and $195 on November 13th. These were the only credits made on the indebtedness covering the period of three weeks. They cannot be said to have amounted to a "strict accounting," or, indeed, to any accounting, within the meaning of the term as used in the agreement, or as construed by the Supreme Court of Oregon in Currie v. Bowman, supra. The rule applicable to these facts is ably stated by Mr. Justice Wolverton, for the Supreme Court of Oregon, in the case of Sabin v. Wilkins, supra, as follows:

> "The intent and purpose of the parties in giving and receiving a chattel mortgage is the test of its validity at its inception; but, as it is a thing capable of modification by subsequent agreement, either express or implied, by co-operative and willful disregard of its terms and conditions, it is a prerequisite to its continuing validity that good faith and fair dealing be maintained towards those whose interests may be affected by it. A chattel mortgage given primarily for the benefit of the mortgagor is void as against creditors from the beginning (Hill's Ann. Laws, § 3053); but, if given bona fide, and the parties, by their subsequent treatment of it and the property covered by it, convert it into an instrument calculated to effectuate the same purpose, it is none the less fraudulent and void from the time such purpose is promoted."

The rule is one calculated to promote fair dealing between a vendor of personal property and his creditors, or parties who are likely to become creditors. In the present case there was nothing whatsoever, of record or otherwise, to indicate to any one with whom Sondheim might be contracting debts that the goods and merchandise on display in his store were incumbered in any manner whatever. It appears from the record that Sondheim purchased merchandise on credit to the value of thousands of dollars, and it is but reasonable to suppose that to a great extent he was enabled to do this by reason of the fact that the parties from whom he purchased looked upon his stock of merchandise as an asset and a source of payment in the event of the failure of Sondheim to meet his obligations. Such, at least, was the inevitable tendency of

the situation, without regard to any actual fraudulent intent on the part of either the bank or Sondheim. It would indeed be a harsh rule which would permit the bank, under such circumstances, to retain and enjoy the fruits of a situation brought about by its own unjust and unfair acts and conduct, at the expense of the general creditors of the bankrupt.

The decree of the court below is affirmed.

HANISH v. UNITED STATES.

(Circuit Court of Appeals, Seventh Circuit. October 5, 1915.)

No. 2071.

1. CRIMINAL LAW ⟹1166½—HARMLESS ERROR—NOTICE TO PRODUCE DOCUMENTS—READING TO JURY.

While a notice to defendant to produce documents constituting a link in the chain of evidence against him has no proper place in correct criminal procedure, and is unnecessary for introduction of secondary evidence of their contents, yet, there being nothing incriminating in the documents, and the fact of the copies thereof introduced being true copies being established by independent evidence, and the offense being fully proved, the reading to the jury of the notice to produce was not a substantive invasion of defendant's constitutional right not to be compelled to testify against himself, but nonprejudicial.

[Ed. Note.—For other cases, see Criminal Law, Cent. Dig. §§ 3114–3123; Dec. Dig. ⟹1166½.]

2. CRIMINAL LAW ⟹37—ENTRAPMENT—OBSCENE BOOKS—DECOY LETTERS.

The gist of the offense of sending obscene books by interstate express still remains, though sent on decoy letters of a government inspector.

[Ed. Note.—For other cases, see Criminal Law, Cent. Dig. § 42; Dec. Dig. ⟹37.

Entrapment as defense to criminal prosecution, see note to Woo Wai v. United States, 137 C. C. A. 609.]

3. CRIMINAL LAW ⟹1172—INSTRUCTIONS—FAILURE OF ACCUSED TO TESTIFY.

Instructing that the fact that defendant did not testify is not to be considered against him is not a prejudicial comment on the fact of his not testifying.

[Ed. Note.—For other cases, see Criminal Law, Cent. Dig. §§ 3128, 3154–3157, 3159–3163, 3169; Dec. Dig. ⟹1172.]

4. OBSCENITY ⟹7—OBSCENE BOOKS—BILLING TO FICTITIOUS NAME.

The character of the transaction as commerce, where defendant sold an obscene book and sent it by interstate express, billed to a person of the name given him by the buyer, is not affected by the name being fictitious.

[Ed. Note.—For other cases, see Obscenity, Cent. Dig. § 7; Dec. Dig. ⟹7.]

5. OBSCENITY ⟹11—OBSCENE BOOKS—INDICTMENT—FICTITIOUS NAME.

It is not one of the particulars necessary to be alleged in an indictment for sending an obscene book by interstate express that the name of the person to whom, as directed, it was billed, was fictitious.

[Ed. Note.—For other cases, see Obscenity, Cent. Dig. § 10; Dec. Dig. ⟹11.]

---

6. CRIMINAL LAW ⟹446—EVIDENCE—REPORTS OF INTERSTATE COMMERCE COMMISSION.

The provision of the Interstate Commerce Act (Act Feb. 4, 1887, c. 104, § 16, 24 Stat. 384, as amended by Act June 29, 1906, c. 3591, § 5, 34 Stat. 590 [U. S. Comp. St. Supp. 1911, p. 1303]), making reports of the Interstate Commerce Commission prima facie evidence of all facts stated in them, "for the purpose of investigations by the Commission and in all judicial proceedings," is not limited to proceedings before the Commission, which are only quasi judicial.

[Ed. Note.—For other cases, see Criminal Law, Cent. Dig. § 1032; Dec. Dig. ⟹446.]

In Error to the District Court of the United States for the Eastern Division of the Northern District of Illinois; Julian W. Mack, Judge.

Otoman Zar Adusht Hanish was convicted, and brings error. Affirmed.

Defendant was convicted on three counts of sending by express from Chicago to Brookfield, Mo., on February 24, 1912, an obscene book, directed to Miss J. B. Gardner, and on three other counts of sending by express the same book March 22, 1909, to Julia B. Gardner, at the same place. There is no such person as Miss J. B. Gardner or Julia B. Gardner. The shipments were made pursuant to decoy letters sent to the defendant by a government inspector, purporting to be written by Miss Gardner.

Many objections were made, and exceptions taken, which have been preserved in assignments of error. Those chiefly important are considered in the opinion.

James R. Ward, of Chicago, Ill., for plaintiff in error.

Charles F. Clyne and Joseph B. Fleming, both of Chicago, Ill., for the United States.

Before BAKER and KOHLSAAT, Circuit Judges, and SANBORN, District Judge.

SANBORN, District Judge (after stating the facts as above). [1] Strenuous objection was made to the reading in the presence of the jury of a notice to defendant's attorney by the district attorney to produce the decoy letters. Two of these letters purported to be written by Miss Gardner to the defendant, and one letter in reply signed by defendant. The letters purporting to be written by Miss Gardner ordered copies of the obscene book, "Inner Studies," and a magazine called "Mazdaznan," and the third one, signed by defendant, stated that the book had been sent by express, and that the magazine would be mailed every month. There was nothing incriminating in the letters, but they were material evidence to connect defendant with the two shipments of the book by express. The copies were read in evidence.

The notice to produce was entirely unnecessary, because defendant could not be compelled to produce any document constituting a link in the chain of evidence against him. By correct criminal procedure the notice should never have been given. Such a notice has no place therein. Much less should it have been read in the jury's presence. McKnight v. United States, 122 Fed. 926, 61 C. C. A. 112 (Lurton, C. J.).

But whether what was done was prejudicial is a wholly different question. The notice was not the sole evidence that the copies of the letters put in evidence were true copies, that fact being established by independent testimony. Without any notice to produce the letters were accordingly admissible. Had the letters been incriminating on their face, as in the McKnight Case (on another appeal, 115 Fed. 972, 54 C. C. A. 358, where the document was "highly incriminating"), the situation might be different. Defendant was not ordered to produce the original letters by the trial judge, nor even requested so to do. Under such circumstances he was in no manner prejudiced by the reading of the notice. His constitutional rights should be carefully guarded by the court, but not to the limit of pure sentimentalism.

Hibbard v. United States, 172 Fed. 66, 71, 96 C. C. A. 554 (in this court), is also distinguishable, because the trial court repeatedly commented upon the nonproduction of the documents there in question, thus carrying to the jury a prejudicial implication. While it is possible that the jury may have felt that defendant feared either to produce the letters or to withhold them, and thus he was compelled in some sense to be a witness against himself, yet in a case like this, where the fact of the interstate shipment by the defendant is fully proved, the character of the literature is satisfactorily shown, and copies of the letters appear, it is very unlikely that the reading of the notice to produce could have been prejudicial.

[2] Another assignment of error raises the question whether the fact that the alleged offenses were committed at the instance of government officials, through decoy letters asking that the obscene book be sent to a fictitious person, excuses the offender. The system of detecting crime by the use of decoy letters, or decoy witnesses, is necessary to the proper administration of criminal justice, and is in quite general use. It does not of itself excuse the offender, unless a constituent element of the crime be thereby removed. In cases of larceny, if the owner of the property, through a decoy, consents to the taking of the property by the accused, the element of trespass or tortious taking, essential to the offense of larceny, is absent, as explained in Love v. People, 160 Ill. 501, 43 N. E. 710, 32 L. R. A. 139, and Topolewski v. State, 130 Wis. 244, 253, 109 N. W. 1037, 7 L. R. A. (N. S.) 756, 118 Am. St. Rep. 1019, 10 Ann. Cas. 627. In the case at bar, however, although defendant sent the books pursuant to the decoy letters, and sent them to a fictitious person, yet the gist of the offense still remained, which was the abuse of interstate commerce facilities to carry his obscene books. "The law was actually violated by the defendant." Grimm v. United States, 156 U. S. 604, 611, 15 Sup. Ct. 470, 39 L. Ed. 550; Rosen v. United States, 161 U. S. 29, 42, 16 Sup. Ct. 434, 480, 40 L. Ed. 606; Goode v. United States, 159 U. S. 663, 16 Sup. Ct. 136, 40 L. Ed. 297.

[3] Another alleged error was the comment of the trial judge upon the fact that defendant did not testify. On this subject the court said:

"You are not, however, to take into consideration at all as against the defendant the fact that he did not testify. The law gives him an absolute privilege to testify or not to testify, as he deems best. If he goes on the witness stand and testifies, then he is like any other witness. If he does not come on

the witness stand and testify, that is not in any sense to be taken against him. He is exercising only the absolute right which is given to him by the law. I do not mean by that to say that if he does not testify it is to be presumed that if he had testified he would have contradicted some other witness. There is no presumption one way or the other. I merely mean to say that his not testifying is not in a thought to be taken against him.

"Now, there is very little that is contradictory in the case. There is perhaps a question as to whether this defendant, or Maurice Clements, used the word 'obscene,' during this conversation at the Temple. The government says that it was used; that the reason assigned by the defendant for sending the book by express was that, if he sent it by mail, it would make him liable to punishment for its obscenity. The witness Maurice Clements says that he did not use the word 'obscene,' and that he did not hear it used. It is for you to determine as between the witnesses who is telling the truth."

This instruction was evidently for the purpose of cautioning the jury not to make any inference against the defendant as they otherwise might have done. It was carefully guarded, and should receive the approval of the court. In any event, it could work no injury. On objection being made, the trial judge said it was done in defendant's interest, as we think it was.

[4, 5] It is contended by defendant that the shipment of the books was not interstate commerce, because they were sent by defendant in Chicago, through Missouri, and back to a government inspector in Chicago, billed to a nonexistent person in Missouri, received there by the sender's agent, and then shipped to him; also, that there was no sale of the books, which is claimed to be essential to make the transaction commerce. Along the same line it is claimed that the facts just recited should have appeared in the indictment, and the defendant was therefore not fully informed of "the nature and cause of the accusation against him." In other words, the contention is that the fictitious element in the transaction makes it transportation only, not commerce, and that, even if it were commerce, the real facts must appear in the indictment.

As to the first point, it is enough to say that the books were sold by defendant to the inspector, and fully paid for. They were delivered by defendant to a common carrier, actually carried from Illinois to Missouri, and there delivered to a person designated to receive them, who sent them by another shipment to the inspector in Illinois. The mere fact that they were billed to a fictitious person in no way affects the character of the transaction as commerce. It was a clear case of intercourse between defendant and the person in Missouri who actually received the books.

For like reasons the additional fact that there was no such person as Julia Gardner was immaterial, need not have been proved, and was not one of the "particulars" necessary to be stated by the rule of United States v. Cruikshank, 92 U. S. 542, 558, 23 L. Ed. 588. The statement of the offense was complete without disclosing this additional element. The transaction was, in effect, the sending of property sold, by a citizen of one state to a citizen of another, and it is entirely immaterial that the latter was made to use an assumed name.

[6] The books were delivered by defendant to the United States Express Company and by it turned over to the Adams Express Company

at Chicago, and were carried by the latter to Brookfield, Mo. Some of the counts charge the delivery of the books to the United States Company, a joint-stock association existing under the laws of New York, for carriage from Chicago to Brookfield. Others charge delivery to the United States Company, organized as aforesaid, being under a common arrangement with the Adams Company, a like joint-stock association, for carriage from Chicago to Brookfield. No proof was offered of the character of the organization of these two express companies, except certified copies of parts of the report of the Interstate Commerce Commission, showing that each of these bodies had reported to it that it was an unincorporated company under the common law of New York. It is provided by the Commerce Act that such reports shall be preserved as public records in the custody of the secretary of the Commission, and shall be prima facie evidence of the facts stated therein "for the purpose of investigation by the Commission *and in all judicial proceedings.*" U. S. Comp. Stats. (1911 Supp.) 1303. There is nothing in the statute to show that this language is limited to proceedings before the Commission. That body is not a court, and proceedings before it are not strictly judicial, but only quasi judicial—partly administrative and partly judicial. That "all judicial proceedings" should be construed as without exception, see City of Superior v. Norton, 63 Fed. 357, 12 C. C. A. 469 (in this court).

The jury found the book "Inner Studies" to be obscene, and the question was fully and properly submitted to them by the trial judge. The language employed therein, particularly in chapter 12, amply justifies such finding.

Some other assignments of lesser importance are discussed in the briefs, but were not pressed in argument. They have, however, been fully considered, but are not of sufficient moment to merit further discussion.

The judgment is affirmed.

HALL MFG. CO. v. WESTERN STEEL & IRON WORKS et al.

(Circuit Court of Appeals, Seventh Circuit. October 5, 1915.)

No. 2165.

1. CONTRACTS ⟹103—VALIDITY—LAW GOVERNING—CONTRACTS IN INTERSTATE COMMERCE.

   The validity of a contract in interstate commerce made by a state corporation is not determined by the law of the state, but by general law, and if any statute applies it must be federal.

   [Ed. Note.—For other cases, see Contracts, Cent. Dig. §§ 468–476; Dec. Dig. ⟹103.]

2. CONTRACTS ⟹116—LEGALITY—RESTRICTIVE COVENANTS IN CONTRACTS FOR SALE OF BUSINESS.

   The validity of a restrictive covenant in a contract of sale of a business and good will is to be tested, not by whether it is limited or unlimited as to time or place, but by determining whether on the facts of the particular

case the restraint is greater than is reasonably necessary for the protection of the purchaser.

[Ed. Note.—For other cases, see Contracts, Cent. Dig. §§ 542–552; Dec. Dig. ⟹116.]

3. CONTRACTS ⟹116—LEGALITY—RESTRICTIVE COVENANTS IN CONTRACT FOR SALE OF BUSINESS.

A corporation sold one branch of its manufacturing business with the machinery, tools, and good will pertaining thereto, receiving substantially more than the value of the physical property sold, and covenanted generally not again to go into the manufacture of the articles embraced in that branch of its business. Its trade had extended into a large number of states and Canada, and was increasing. *Held*, that the covenant was no broader than the conveyed good will, and was valid and enforceable.

[Ed. Note.—For other cases, see Contracts, Cent. Dig. §§ 542–552; Dec. Dig. ⟹116.]

4. GOOD WILL ⟹6—SALE—RIGHTS OF PURCHASER—RESUMPTION OF BUSINESS BY VENDOR.

The purchaser of a business and its good will is entitled to protection against an attempt by the seller to retake such good will, even though there was no express covenant against it.

[Ed. Note.—For other cases, see Good Will, Cent. Dig. §§ 2–5; Dec. Dig. ⟹6.]

Appeal from the District Court of the United States for the Eastern District of Wisconsin; Ferdinand A. Geiger, Judge.

Suit in equity by the Hall Manufacturing Company against the Western Steel & Iron Works and Robert T. Jenny. Decree for defendants, and complainant appeals. Affirmed as to defendant Jenny, and reversed as to his codefendant.

Samuel H. Cady, of Green Bay, Wis. (M. W. Herrick, of Monticello, Iowa, and Max H. Strehlow and Lynn D. Jaseph, both of Green Bay, Wis., on the brief), for appellant.

George G. Greene, of Green Bay, Wis. (Jerome R. North, of Green Bay, Wis., on the brief), for appellees.

Before BAKER, KOHLSAAT, and MACK, Circuit Judges.

BAKER, Circuit Judge. This appeal is from a decree dismissing appellant's bill on final hearing.

Facts, counted on in the bill and established by the proofs, may be summarized as follows:

Appellant, an Iowa corporation, located at Monticello, was engaged in making wire stretchers, hoisting blocks, stake irons, weed pullers, and similar farm appliances, and in selling them generally wherever there was a demand.

Appellee, Western Steel & Iron Works, a Wisconsin corporation, located at De Pere, was engaged in making farm gates, trowels, spades, etc. It was organized in 1905. Prior to November 26, 1910, it also made and sold post hole augers and diggers—diggers since 1905 and augers since the beginning of 1909.

During the summer and fall of 1910 appellee was financially embarrassed, its property was under mortgage, and it was in pressing need of ready money. It solicited appellant to buy its digger and auger business, which amounted to about half of its total business. Officers of appellee visited Monticello, officers of appellant examined the prop-

erty at De Pere, and meetings were had at Milwaukee. On November 26, 1910, appellee sold and conveyed to appellant everything pertaining to the digger and auger business, machinery, tools, dies, finished and unfinished stock, orders, patents, and "the good will of the business." Collateral to the sale of the good will appellee covenanted "to render such assistance as it reasonably can in introducing it (appellant) to the trade and in forwarding to it any orders it may receive for augers and diggers after December 10, 1910," and "not again to go into the manufacture of post hole augers and diggers."

At the time of the sale, when appellee's business in diggers was five years old and in augers two, it had marketed these articles in thirty-four of the United States and in two Canadian provinces. In considerable regions these articles cannot be used. Appellee's sales were entirely to jobbing houses. In addition to seed that had already brought forth fruit, appellee through advertisements, commission men, and the outstretched hands of jobbers had sown other seed, so that we may take the fact to be in accordance with the admitted representation of appellee's treasurer that appellee was trying to sell wherever there was a demand and that by reasonable attention the trade could be expected to extend "throughout all parts of the United States and Canada where augers and diggers can be used." So it is evident that appellee was selling and was covenanting to protect a national and international good will.

Appellant paid the agreed price, $13,500, less deductions, provided for in the contract, of about $3,000 for appellee's failure to turn over the stipulated amount of orders. The evidence in the record warrants the conclusion that appellee under the contract obtained about double the fair selling value of its worn machinery, tools, etc., and that appellant would not have purchased the physical property apart from the good will of the business and appellee's protective covenants.

This purchase was made by appellant because diggers and augers would fit in well with the lines of farm appliances it was already making and selling. Neither before nor afterwards was appellant a party to any combination or agreement for fixing prices or restraining competition. And consumers have been able to purchase diggers and augers at prices as low as formerly, under competition of the same number of independent manufacturers doing business throughout the country.

Appellant began promptly to manufacture and market the same seven styles that appellee had been supplying to the trade, and under the same seven names, which, except as to "Ideal" and "Western," for which patents were assigned to appellant, had become generic names of styles on which patents had expired.

Within a month or so appellee, with its mortgage discharged and its financial embarrassment relieved, began to manufacture all its former open styles under the old names, and to sell them wherever it could. When appellant learned of this conduct, some six months later, it protested; and, its protest being defied, this suit was begun.

Appellee Jenny was made a defendant under allegations that patents owned by appellee company stood in his name and had not been

assigned as provided for in the contract. These averments are not sustained, and the decree as to Jenny will be affirmed.

Appellee in its answer justified its conduct under an alleged rescission. But as the proofs showed that appellee was holding onto the purchase price and had made no offer to restore the status, the contract must be considered alive.

[1] Another avoidance of the necessity of facing its conduct was based on Wisconsin statutes and decisions. Section 1770b relates to foreign corporations doing business in the state. Section 1791j is under the title "Trusts, Pools, and Conspiracies." Section 1747e is part of the treatment of "Trusts and Monopolies." Cited decisions are said to prove Wisconsin's rejection of contracts in total restraint of trade. We attempt no analysis, because we assume that Wisconsin has not undertaken to regulate interstate commerce. Every part of this transaction was in interstate commerce. Even the Wisconsin trade, which had been intrastate as to appellee, was intended by the parties to be and it became interstate when conveyed to appellant. The validity of a contract in interstate commerce must be determined by the general law. If any statute applies, it must be federal. And so long as Wisconsin permits her corporations to reach out beyond the state borders and do business with citizens of other states, such corporations must be treated in regard to interstate commerce the same as any citizen of the United States.

Is appellant remediless? The trial court so decided because the protective covenants are without limitation of either time or place.

In the first reported case, that of John Dier, decided in 1415, Year Book 2 Hen. V, 5, covenants were held to be unenforceable, no matter how limited in time and place. Hull, J., said:

> "In my opinion you might have demurred upon him, that the obligation is void, inasmuch as the condition is against the common law; and (per Dieu) if the plaintiff were here he should go to prison till he paid a fine to the king."

During the generations when an artisan had to pass through apprenticeship into a guild, when he was tied to his trade and place by statutes forbidding him to leave his parish under pain of pillory or prison, when if he could not stand where he was rooted he would become a public charge, it may have been right enough for the king's courts to see no public interest but the artisan's ability to pay taxes and serve the king. If, however, fifteenth century doctrines of absolutism were to govern in twentieth century conditions of democracy, a victim of a covenantor's perfidy might well prefer to settle his legal rights by the fifteenth century wager of battle. But the glory of the common law is its inherent power of growth, its adaptability to new and enlarged conditions of life, its respondence to higher standards of social and business ethics. And so during the centuries naturally there were developments and departures with respect to this ancient doctrine. It took the courts a long time to get beyond testing the validity of a restrictive covenant purely by the presence or absence of limitations. If a restraint was unlimited as to both time and place, or was unlimited as to place though not as to time, it was unenforce-

able; if limited as to both time and place, or if limited as to place, though not as to time, it was valid.

[2] But, beginning about 1830, the advent of the factory system, multifold new machines, railroads, steamships, fast mail and express service, telegraphs, telephones, wireless, trolleys, automobiles, aeroplanes, lessening space, shortening time, offering continually new and widening avenues for both labor and capital, emphasized a point of view that had been suggested in somewhat earlier times; and that is that the validity of a restrictive covenant should be tested by determining whether on the facts of the particular case the restraint is greater than is reasonably necessary for the protection of the purchaser of the business and good will. The history of the development, with its waves of progress and recession, may be traced in England and our own country in the following cases: Dier's Case (1415) supra; Ipswich Taylor's Case (1615) 11 Coke, 53; Broad v. Jollyfe (1621) Cro. Jac. 596; Mitchell v. Reynolds (1711) 1 P. Williams, 181; Bunn v. Guy (1803) 4 East, 190; Horner v. Graves (1831) 7 Bing. 735; Whittaker v. Howe (1841) 3 Beavan, 383; Mallan v. May (1843) 11 M. & W. 653; Price v. Green (1847) 16 M. & W. 346; Tallis v. Tallis (1853) 1 El. & El. 391; Harms v. Parsons (1862) 32 Beavan, 329; Leather Cloth Co. v. Lorsont (1869) 39 L. J. Ch. 86; Hagg v. Darley (1878) 47 L. J. Ch. 567; Rousillon v. Rousillon (1880) 49 L. J. Ch. 338, 14 Ch. D. 351; Baines v. Geary (1887) 35 Ch. D. 154; Mills v. Dunham (1891) 1 Ch. 576; Badische Anilin und Soda Fabrik v. Schott Segner & Co. (1892) 3 Ch. 447; Nordenfelt v. Maxim-Nordenfelt Guns and Ammunition Co. (1894) App. Cas. 535, 63 L. J. Ch. 908; Dubowski & Sons v. Goldstein (1896) 1 Q. B. 478; Underwood v. Barker (1899) 1 Ch. 300; Haynes v. Doman (1899) 2 Ch. 13; Lamson Pneumatic Tube Co. v. Phillips (1904) 91 L. T. 363; Dowden & Pook, Limited, v. Pook (1904) 1 K. B. 45; Henry Leetham & Sons, Limited, v. Johnstone-White (1907) 1 Ch. 322; Mason v. Provident Clothing & Supply Co., Ltd. (1913) A. C. 724; Nevanas & Co. v. Walker & Foreman (1914) 1 Ch. 413; Oregon Steam Navigation Company v. Winsor (1873) 20 Wall. (87 U. S.) 64, 22 L. Ed. 315; Diamond Match Co. v. Roeber (1887) 106 N. Y. 473, 13 N. E. 419, 60 Am. Rep. 464; Fowle v. Park (1888) 131 U. S. 88, 9 Sup. Ct. 658, 33 L. Ed. 67; Gibbs v. Consolidated Gas Co. of Baltimore (1888) 130 U. S. 396, 9 Sup. Ct. 553, 32 L. Ed. 979; Carter v. Alling (C. C.) 1890) 43 Fed. 208; United States Chemical Co. v. Provident Chemical Co. (C. C. 1894) 64 Fed. 946; Harrison v. Glucose Sugar Refining Co. (1902) 116 Fed. 304, 53 C. C. A. 484, 58 L. R. A. 915; National Enameling & Stamping Co. v. Haberman (C. C. 1903) 120 Fed. 415; Knapp v. S. Jarvis Adams Co. (1905) 135 Fed. 1008, 70 C. C. A. 536; Prame v. Ferrell (1909) 166 Fed. 702, 92 C. C. A. 374; Marshall Engine Co. v. New Marshall Engine Co. (1909) 203 Mass. 410, 89 N. E. 548.

Tested by the rule of reason, a restrictive covenant is not necessarily valid because it is limited in time and place. Logically the corollary follows that by the same rule of reason a restrictive covenant is not necessarily invalid because it is unlimited in time and place. A re-

straint of 500 miles and 50 years on a village doctor, who had only a local practice, would be unreasonable, because not reasonably necessary to the protection of his successor, while a general covenant by Pears Soap Company should be enforced (at least to the extent of the decreeing court's reach) because the good will of the business is world-wide and of expected indefinite continuance.

In Prame v. Ferrell, supra, a general covenant was enforced. The court construed the covenant "as limiting the restraint to the United States." In the present case the trial court accepted counsel's criticism that our brethren of the Sixth circuit were violating the rule that courts cannot lawfully remake the contract of the parties. But in our judgment the same result of enforceability is reached by taking the covenant as written, without limitation of time or place. For the covenant is neither immoral nor criminal. It stands, unless it must be overthrown on account of the covenantor's objection. His objection is based wholly on our domestic public policy. Our domestic public policy has no extraterritorial force. And therefore the limitation of the decree, if so made, comes from the inherent limitation of the covenantor's objection, not from constructively limiting his unlimited covenant.

[3] In this case, and in all of the kind, two public interests are to be balanced against the one that is opposed to restrictive covenants: Honesty and fidelity among our business men; and the interest of every one, and so of all, in being able to sell on the most advantageous terms whatever property he owns or has produced, whether tangible or intangible. Unless injury to the public manifestly outweighs the public policies of honesty and of freedom of alienation, restrictive covenants should be enforced. Here, of course, honesty condemns the conduct of appellee. Freedom of alienation is a byword, if appellee may sell property, retain the proceeds, and then repossess itself of the property with impunity. And what injury to the public was done that preponderates over honesty and freedom of alienation in the other scale? Appellee is a corporation. If any stockholder or officer is skilled in any profession or art, he is not restrained from exercising his skill by the corporation's covenant. Even the capital that was at hazard in the digger and auger branch of appellee's factory may be reinvested in the same business by the stockholders individually or collectively outside of appellee corporation. Appellee itself, rescued from financial embarrassment, and with its remaining business made sound by the use of appellant's money has been benefited. Consumers in Wisconsin and everywhere in our country get as fair prices as before, under competition of the same number of independent manufacturers. In our judgment there is no injury to the public, and the scale containing honesty and freedom of alienation strikes bottom. Inasmuch as the collateral covenants are no broader than the conveyed good will, full-grown and embryonic, they should be enforced.

[4] But, apart from the covenants, we think appellant is not remediless. If the covenants were considered void, that would not vitiate the contract in other respects, since there is nothing immoral or criminal in making such covenants. They are merely unenforce-

able civilly at the worst. Western Union Telegraph Co. v. Burlington & Southwestern Ry. Co. (C. C.) 11 Fed. 1; Western Union Tel. Co. v. Kansas Pacific Ry. Co. (D. C.) 4 Fed. 284; Ft. Smith Light & Traction Co. v. Kelley, 94 Ark. 461, 127 S. W. 975; Dean v. Emerson, 102 Mass. 480; Peltz v. Eichele, 62 Mo. 171; Fishell v. Gray, 60 N. J. Law, 5, 37 Atl. 606; Rosenbaum v. U. S. Credit System Co., 65 N. J. Law, 255, 48 Atl. 237, 53 L. R. A. 449; Union Locomotive & Express Co. v. Erie Ry. Co., 35 N. J. Law, 240; Smith's Appeal, 113 Pa. 579, 6 Atl. 251; Mallan v. May, supra; Price v. Green, supra; Cheesman v. Nainby, 2 Lord Raym. 1456; Dubowski & Sons v. Goldstein, supra; Rogers v. Maddocks, [1892] 3 Ch. 346.

If one should sell a chattel, and then retake it by stealth or force or fraud, both the criminal and the civil law would lay hold. Because the retaking of a conveyed good will has not yet been included in the penal code is no reason, in our judgment, why equity should hesitate to arrest the trespass.

As to appellee Jenny the decree is affirmed; as to appellee corporation the decree is reversed, and the cause remanded for proceedings in consonance with this opinion.

THE ALASKAN.

(Circuit Court of Appeals, Ninth Circuit. November 8, 1915.)

No. 2609.

MARITIME LIENS ⚷65—STATUTORY LIENS FOR REPAIRS—RELIANCE ON CREDIT OF VESSEL.

Under Rem. & Bal. Code Wash. § 1182, which gives a lien on a vessel for repairs made at the request of the owner, agent, etc., conceding that there must be some evidence that the repairs were furnished on the credit of the vessel, such evidence need be only slight; and the uncontradicted evidence of the repairer that he relied on the credit of the vessel, and that he had previously made repairs for the same owner, charged the same to the vessel direct, and rendered the bills to the owner, is sufficient.

[Ed. Note.—For other cases, see Maritime Liens, Cent. Dig. § 103; Dec. Dig. ⚷65.

Maritime lien for supplies and services, presumption as to credit to vessel, see note to The George Dumois, 15 C. C. A. 679.]

Appeal from the District Court of the United States for the Northern Division of the Western District of Washington; Jeremiah Neterer, Judge.

Suit in admiralty by Arthur F. Hutton, doing business as the Hutton Machine Works, against the Steamship Alaskan; the British Columbia Marine Railway Company, Limited, claimant. Decree for claimant, and libelant appeals. Reversed.

H. A. Martin, of Seattle, Wash., for appellant.

Ira Bronson, J. S. Robinson, and H. B. Jones, all of Seattle, Wash., for appellee.

Before GILBERT and ROSS, Circuit Judges, and RUDKIN, District Judge.

RUDKIN, District Judge. Arthur F. Hutton, doing business as Hutton Machine Works, filed his libel against the steamship Alaskan, her boilers, engines, machinery, boats, apparel, and furniture, to enforce a lien for repairs furnished to the vessel between the 24th day of August, 1909, and the 29th day of September of the same year. The lien was claimed under section 1182 of Rem. & Bal. Code Wash., which provides as follows:

"All steamers, vessels and boats, their tackle, apparel and furniture, are liable * * * 2. For work done or material furnished in this state for their construction, repair or equipment at the request of their respective owners, charterers, masters, agents, consignees, contractors, subcontractors, or other persons or person having charge in whole or in part of their construction, alteration, repair or equipment; and every contractor, builder or person having charge, either in whole or in part, of the construction, alteration, repair or equipment of any steamer, vessel or boat, shall be held to be the agent of the owner for the purposes of this chapter, and for supplies furnished in this state for their use, at the request of their respective owners, charterers, masters, agents or consignees, and any person having charge, either in whole or in part, of the purchasing of supplies for the use of any such steamer, vessel or boat, shall be held to be the agent of the owner for the purposes of this chapter."

The British Columbia Marine Railway Company, Limited, intervened as claimant, and on the final hearing the libel was dismissed on the ground that it did not appear that the repairs were furnished on the credit of the vessel. From this decree the present appeal was allowed and prosecuted.

The sole question in the case is: Were the repairs furnished on the credit of the vessel, or was credit extended exclusively to the owner or agent? If it appears that supplies or repairs were not furnished on the credit of the vessel, no lien attaches under the maritime law; but it is well settled that there is a presumption that supplies or repairs, ordered by the master or other ship's agent, were furnished on the credit of the vessel, unless the contrary appears. Thus, in the case of The Emily Souder, 17 Wall. 666, 670 (21 L. Ed. 683), the court said:

"The presumption of law always is, in the absence of fraud or collusion, that where advances are made to a captain in a foreign port, upon his request, to pay for necessary repairs or supplies to enable his vessel to prosecute her voyage, or to pay harbor dues, or for pilotage, towage, and like services rendered to the vessel, that they are made upon the credit of the vessel as well as upon that of her owners. It is not necessary to the existence of the hypothecation that there should be in terms any express pledge of the vessel, or any stipulation that the credit shall be given on her account."

No lien was given by the maritime law for supplies or repairs furnished at the home port, and for that reason statutes have been enacted in the different states giving a lien for such supplies and repairs, similar, in many respects, to the maritime lien. It has been said on high authority that the presumption that the repairs or supplies were furnished on the credit of the vessel applies to the statutory as well as to

the maritime lien. Thus the Pennsylvania act of June 24, 1895 (P. L. 251), provides that:

"Ships and vessels of all kinds built, repaired, fitted, furnished and supplied with necessaries for navigation within this commonwealth shall be subject to a lien for all debts contracted by the builders, masters, owners, agents or consignees thereof, for work done or materials and supplies found or provided in the building, repairing, fitting, furnishing, supplying or equipping of the same in preference to any other debt due from the builders, masters, owners, agents, or consignees thereof."

And in speaking of the lien thus given, in the case of The Vigilant, 151 Fed. 747, 753, 81 C. C. A. 371, 377, Judge Gray said:

"The very object of the state law is to give a lien not given by the maritime law, to wit, for supplies to a vessel at its home port, where, it may be, its owner resides, and where the conditions and necessities, in recognition of which the maritime law creates a lien upon a foreign vessel, do not exist. As we have before said, the state law, which says, in effect, that the supplies ordered by a master, owner or consignee, are presumed to be on the credit of the vessel (unless the contrary is shown), enters into the contract, which must be taken to have been made with reference to the law. The burden, therefore, of showing an express repudiation of such a pledge, known to the one who claims the lien, rests upon him who undertakes to rebut its implication."

But conceding, as we do, that there must be some evidence tending to show that the repairs were furnished on the credit of the vessel, the evidence need only be slight (The Bainbridge, 210 Fed. 622, 127 C. C. A. 258), and may be either direct or circumstantial. That the appellant furnished the repairs on the credit of the vessel in this case, and at all times intended to claim the benefit of the lien laws of the state, clearly appears from the following extract from his testimony:

"Q. Were these repairs that you made at that time necessary repairs to be made for the operation of the boat? A. Absolutely. Q. Had you done work for these people before? A. On several occasions. Q. How had you charged on other occasions? A. To the vessel direct. Q. And the bills had always been rendered to Bradford, charged to the boat direct? A. Charged to the boat, rendered to the company's office. Q. Would you have done the work that was done on this boat on anything except the credit of the vessel? A. Absolutely not."

This testimony was not contradicted. It seems equally manifest that the intention of the appellant in this regard was known to and acquiesced in by the ship's agent, at whose instance the repairs were furnished. In all their prior dealings the repairs were charged to the vessels direct, and bills thus rendered were paid without protest or objection. The same course was pursued in this case without protest or objection; and the fact that the prior repairs may have been made on other vessels is unimportant, if the parties were the same and the course of dealing the same. So far as the record discloses the Alaskan was the only asset of the Alaskan Company; credit was not extended to the agent, nor does it appear that credit was extended exclusively to the owner, with whom the appellant had no dealings. The appellant furnished the repairs in good faith in reliance upon the lien laws of the state, and all the facts and circumstances satisfy us that his course in so doing was known to the ship's agent, who fully acquiesced therein.

It follows from this that the lien claim is well founded, and the decree is accordingly reversed, with directions to enter a decree for the appellant for the balance due, with interest and costs.

AMERICAN BANK & TRUST CO. et al. v. COPPARD.*

In re JONES MILLINERY CO.

(Circuit Court of Appeals, Fifth Circuit. November 12, 1915.)

No. 2749.

BANKRUPTCY ⟹164—VOIDABLE PREFERENCE—CHECKS GIVEN BANK IN PAYMENT OF NOTES.

Payments of notes to a bank in good faith by a mercantile company, within four months prior to its bankruptcy and when insolvent, by checks drawn on its ordinary deposit account kept in such bank in the usual course of business, do not constitute voidable preferences, recoverable by its trustee.

[Ed. Note.—For other cases, see Bankruptcy, Cent. Dig. § 267; Dec. Dig. ⟹164.]

In Error to the District Court of the United States for the Western District of Texas; Wm. B. Sheppard, Judge.

Action at law by M. Coppard, trustee in bankruptcy of the Jones Millinery Company, against the American Bank & Trust Company and the West Texas Bank & Trust Company. Judgment for plaintiff, and defendants bring error. Reversed.

Templeton, Brooks, Napier & Ogden and Walter P. Napier, all of San Antonio, Tex., for plaintiffs in error.

James D. Crenshaw, of San Antonio, Tex., for defendant in error.

Before PARDEE and WALKER, Circuit Judges, and SPEER, District Judge.

SPEER, District Judge. The American Bank & Trust Company and the West Texas Bank & Trust Company, consolidated, had for a customer and depositor the Jones Millinery Company, of San Antonio, Tex. Their transactions were those usual in such mutual relations. The Jones Millinery Company made deposits almost daily, and drew checks against its account. The bank was careful to make inquiry as to the general conduct of the Jones Millinery Company, and according to the uncontradicted evidence believed Mr. Jones, who controlled it, "to be a conservative and straight business man." Occasionally the Jones Millinery Company gave notes to the bank, on which payments were made from time to time by checks drawn against its regular account. There were always sufficient funds on deposit to pay such checks, and there had been no unusual deposits made for the purpose of meeting them. The payments thus made, which were sought to be recovered by the trustee, were as follows: November 18, 1914, $500; December 13, 1914, $502.25; and January 6, 1914, $1,-

---

⟹For other cases see same topic & KEY-NUMBER in all Key-Numbered Digests & Indexes

*Rehearing denied January 4, 1916.

013.34. These payments were to be applied on its past-due indebtedness to the bank. A proceeding in bankruptcy having been filed on January 20, 1914, these transactions were assailed by the trustee as voidable preferences. On the trial counsel for the bank requested the court to direct a verdict in its favor. This was declined, and error assigned thereon. The case was submitted to the jury, and a verdict returned in favor of the trustee for the amount of the last payment, namely, $1,013.34. The relating language of the presiding judge follows:

"The bank could credit its account with the funds of the bankrupt on deposit, and could accept the draft of the bankrupt upon the bank against that deposit for an antecedent indebtedness; but in doing so it must be without knowledge of the condition of the bankrupt at the time it honored the draft, or without any intention, or without any purpose or cause to believe at the time that such credit would result in a preference over other creditors of the same class."

The District Judge continues:

"If you believe from a preponderance of the evidence in this case that at the time these payments were made the Jones Millinery Company was insolvent, and that at the time the drafts were paid by the bank, or the funds withdrawn from the deposits, the American Bank & Trust Company had reason to believe that a preference would result, it makes no difference what the intention of the Jones Millinery Company was, but the intention on the part of the bank receiving them, having reason to believe that a preference would be created, then the trustee would be entitled to recover, and the verdict would be for the amount of whatever debt was paid, if the bank had reason to believe that a preference would result."

The question presented is of great importance to the business of banking, upon which the prosperity of the country so largely depends. It is true that if an insolvent, within four months antecedent to bankruptcy, should make deposits or give checks to a bank to enable it to secure a preference, the transaction would be inimical to the bankruptcy law, and would be held void as a preference. But when an insolvent customer makes a deposit with his bank, in good faith and in the usual course of business, at any time within four months before the petition in bankruptcy is filed against him, the bank is allowed to credit the amount on notes of the bankrupt held by it. New York County National Bank v. Massey, 192 U. S. 138, 24 Sup. Ct. 199, 48 L. Ed. 380. There the referee and the District Court approved such a credit, and, while it was discredited by the Circuit Court of Appeals, it was, on appeal, approved by the Supreme Court of the United States, Mr. Justice Day rendering the opinion. In the case at bar, at the time of bankruptcy, there was a balance on deposit of $193, which, as in the Massey Case, was allowed the bank by the bankruptcy court and without objection.

A case more clearly in point, however, is that of Studley v. Boylston National Bank, 229 U. S. 527, 33 Sup. Ct. 806, 57 L. Ed. 1313. There the court restricted its attention to the bank's right of set-off, under sections 68a and 68b of the Bankruptcy Act (Act July 1, 1898, c. 541, 30 Stat. 565 [Comp. St. 1913, § 9652]), which provides:

"Set-Offs and Counterclaims.—a. In all cases of mutual debts or mutual credits between the estate of a bankrupt and a creditor the account shall be

stated and one debt shall be set off against the other, and the balance only shall be allowed or paid.

"b. A set-off or counterclaim shall not be allowed in favor of any debtor of the bankrupt which (1) is not provable against the estate; or (2) was purchased by or transferred to him after the filing of the petition, or within four months before such filing, with a view to such use and with knowledge or notice that such bankrupt was insolvent, or had committed an act of bankruptcy."

This controlling precedent is additionally important because there the set-off was made by checks drawn by the bankrupt against his account in the bank, and credited on past-due indebtedness, as in the case at bar. Said the Supreme Court (page 528 of 229 U. S., page 808 of 33 Sup. Ct., 57 L. Ed. 1313), Mr. Justice Lamar pronouncing the opinion:

"That section did not create the right of set-off, but recognized its existence and provided a method by which it would be enforced even after bankruptcy. What the old books called a right of stoppage—what business men call set-off—is a right given or recognized by the commercial law of each of the states, and is protected by the Bankruptcy Act, if the petition is filed before the parties have themselves given checks, charged notes, made book entries, or stated an account whereby the smaller obligation is applied on the larger. The banker's lien on deposits, the right of retention and set-off of mutual debts, are frequently spoken of as though they were synonymous, while in strictness a set-off is a counterclaim which the defendant may interpose by way of cross-action against the plaintiff. But, broadly speaking, it represents the right which one party has against another to use his claim in full or partial satisfaction of what he owes to the other. That right is constantly exercised by business men in making book entries whereby one mutual debt is applied against another. If the parties have not voluntarily made the entries, and suit is brought by one against the other, the defendant, to avoid a circuity of action, may interpose his mutual claim by way of defense, and if it exceeds that of the plaintiff may recover for the difference. Such counterclaims can be asserted as a defense or by the voluntary act of the parties, because it is grounded on the absurdity of making A. pay B. when B. owes A. If this set-off of mutual debts has been lawfully made by the parties before the petition is filed, there is no necessity of the trustee doing so. If it has not been done by the parties, then, under command of the statute, it must be done by the trustee. But there is nothing in section 68a which prevents the parties from voluntarily doing, before the petition is filed, what the law itself requires to be done after proceedings in bankruptcy are instituted."

We deem this conclusion of the Supreme Court salutary as sound. An honest man of business, though embarrassed and possibly insolvent, may not be deprived of the great aid of legitimate banking. Though in deep water, one is not forbidden to swim to safety if he can. Since there is nothing in the record betraying any evidence of fraud, or evasion of the Bankruptcy Law, on the part of the bankrupt or the bank, we must hold that the latter was entitled to the instruction it sought, and it follows that the judgment of the learned District Judge must be reversed.

UNITED PRINTING MACHINERY CO. v. CROSS PAPER FEEDER CO.

(Circuit Court of Appeals, First Circuit. November 11, 1915. Rescript, December 31, 1915.)

No. 1116.

1. PATENTS ⟹328—VALIDITY AND INFRINGEMENT—PAPER FEEDING MACHINE.
The Briggs patent, No. 609,954, for a paper feeding machine for feeding separately sheets of paper from a pile to a printing press, was not anticipated and covers a patentable improvement of some breadth; also *held* infringed.

2. PATENTS ⟹129—ASSIGNMENT—ESTOPPEL OF ASSIGNOR—INCONSISTENT POSITIONS.
The assignor of a patent for value, with covenant of warranty, is estopped to deny its validity when sued for infringement by the assignee or to claim a narrower construction of the claims than it did to induce the sale.
[Ed. Note.—For other cases, see Patents, Cent. Dig. §§ 182½–186; Dec. Dig. ⟹129.]

3. PATENTS ⟹202—ASSIGNMENT—ESTOPPEL OF ASSIGNOR—"SUBSTANTIALLY AS DESCRIBED."
The assignor of a patent for value, with covenants of warranty, is estopped, when sued for infringement thereof by the assignee, to deny that the claims cover every structure within the fair meaning of the language of the claims. The words "substantially as described" *held* not to limit the claim to the construction shown in the patent.
[Ed. Note.—For other cases, see Patents, Cent. Dig. §§ 281–289; Dec. Dig. ⟹202.]

4. PATENTS ⟹328—VALIDITY AND INFRINGEMENT—PAPER FEEDING MACHINE.
The White patent, No. 659,907, for a sheet feeder for feeding sheets of paper to a printing press, *held* not infringed by a machine having no "latching device," which is made an element of each claim.

Appeal from the District Court of the United States for the District of Massachusetts; Clarence Hale, Judge.

Suit in equity by the Cross Paper Feeder Company against the United Printing Machinery Company. Decree for complainant, and defendant appeals. Reversed in part, and affirmed in part.

For opinion below, see 220 Fed. 313.

Philip C. Peck, of New York City (J. Sidney Stone, of Boston, Mass., on the brief), for appellant.

Benjamin Phillips, of Boston, Mass. (Alfred H. Hildreth, of Boston, Mass., on the brief), for appellee.

Before PUTNAM and DODGE, Circuit Judges, and MORTON, District Judge.

MORTON, District Judge. This is a suit to enjoin the infringement of two patents, viz., that to T. A. Briggs, dated August 30, 1898, numbered 609,954, for a "paper feeding machine," and that to S. K. White, dated October 16, 1900, numbered 659,907, for a "sheet feeder." In the District Court there was a decree for the complainant on both patents, and the defendant has appealed. We shall use the words "complainant" and "defendant" as meaning the same party as in the lower court.

Both patents relate to machines for feeding separate sheets of paper from a pile to a printing press or other machine. The result to be accomplished is to push forward successively single sheets from the top of the pile as fast as the receiving machine is ready for them. As to the points now before us, the problem was (1) to advance single sheets only; and (2) to regulate the amount of advance so that each sheet should be left in just the proper position for the receiving machine or forwarding mechanism to take it away. The Briggs patent is directed to the first point; the White, to the second. There is no necessary interrelation between the two patents.

[1] As to the Briggs patent: It is essential in such machines that the top sheet, in being finally pulled away by the forwarding or receiving machinery, shall not disturb the underlying sheets in the pile So that two sorts of mechanism are involved, viz., that for separating and feeding forward the top sheet, and that for holding the others while the top sheet is drawn off. For doing the first, there had been invented prior to Briggs what is called a "combing roll," or "comb roll." It consists of a wheel having, set around its periphery, small rollers free to revolve on their own axes. When such a combing roll is rotated against the top of a pile of sheets of paper, the small rollers deliver a series of forward blows and pulls, the effect of which is to move ahead the top sheet beyond the second sheet, the second sheet beyond the third, the third beyond the fourth, and so on. This is called "combing out" the pile. While it is going on the pile should be free from restraint or pressure.

When the top sheet has been combed forward the requisite distance, i. e., to the forwarding mechanism, or to the drawing in mechanism of the receiving machine, the combing action must cease, until that sheet has been taken away. At this point, the rear of the combed pile is staggered forward like a shingled roof; i. e., each sheet is a little farther forward than the one immediately below it, so that—the sheets being all of the same length—the rear end of the second sheet is uncovered. To keep the remaining sheets in place while the top one is being pulled away, a "presser foot" is provided in the Briggs patent, and had been used before him, which presses down on the exposed part of the second sheet near its rear edge, and holds the second and all lower sheets against being disturbed by the drag of the moving top sheet, which otherwise would disarrange the pile. After this presser foot has come into action, the combing roll is raised, completely freeing the top sheet, which is then seized and drawn away by the forwarding or receiving mechanism. The presser foot is then raised, the combing roll again comes into operation on the second sheet (which is now the top one), and the cycle is repeated.

This combination of a combing roll and presser foot had been known and used before Briggs' invention, but their interaction had never up to his time been controlled by purely mechanical means. The combination of a feed wheel (instead of a combing wheel) and a presser foot, or its equivalent, controlled by mechanical means, had also been used. But a feed wheel (which has a regular periphery of friction material) operates differently in some respects from a combing

roll; it does not "stagger" or "comb" the pile; and the mechanism used with it differs from that used with a combing roll. A feed wheel cannot be interchanged for a combing wheel in any given combination (nor vice versa) without affecting, and perhaps destroying, the action of the machine. By combining a combing roll, which moved the top sheet slightly forward, thereby uncovering the rear end of the second sheet, and a presser foot acting on this exposed portion of the second sheet, both combing roll and presser foot operating alternately by purely mechanical means against the pile of sheets, Briggs made a patentable improvement of some breadth, which it was one purpose of this patent to protect.

The Briggs patent was at one time owned by the present defendant. While the defendant was the owner, it notified the complainant that a certain machine, which the complainant was then making, infringed the patent. The complainant thereupon bought the Briggs patent for a substantial sum from the defendant. The machine then made by the complainant and claimed by the defendant to be an infringement of the Briggs patent was, as to the parts in question under this patent, substantially similar to the one now made by the defendant which it here contends does not infringe the same patent. The conveyance of the Briggs patent from the defendant to the complainant contained full covenants of warranty, one of which was that the assignor was "the lawful owner of said several letters patent and of the said several inventions described therein." The White patent was also owned by the defendant and was conveyed to the complainant by the same instrument, and with the same covenants, as the Briggs patent as part of the same transaction.

Only one claim of the Briggs patent is in suit, the tenth, which reads as follows:

"10. The combination with the feed table, of a comb wheel, mechanism whereby said wheel is alternately lowered upon the bank of paper and raised therefrom, a presser foot, and mechanism whereby said foot is lowered to hold the bank of paper when the comb wheel is elevated, and raised to release the top sheet when the comb wheel is lowered, substantially as set forth."

[2] That this claim is a valid one the defendant is estopped to deny. And this estoppel extends to every structure within the fair meaning of the language of the claim. Ball & Socket Fastener Co. v. Ball Glove Fastening Co., 58 Fed. 818, 7 C. C. A. 498; Babcock v. Clarkson, 63 Fed. 607, 11 C. C. A. 351; United Shoe Machinery Co. v. Caunt (C. C.) 134 Fed. 239; U. S. Frumentum Co. v. Lauhoff, 216 Fed. 610, 132 C. C. A. 614. The principle defense is noninfringement. It is contended by the defendant—the argument being based on the words "substantially as set forth," which form part of the claim—that the claim is limited to a construction in which the combing wheel and the presser foot alternately carry each other's weight and bear upon the paper "in substantially the same transverse line across the feeder." (Defendant's Brief, p. 27.)

In the Briggs machine, the combing roll and the presser foot are side by side, both being at the extreme rear of the pile; and they rest alternately upon the sheets of paper. The one which is temporarily out of action is supported on the other, like a man standing first on one foot and then on the other. In the defendant's machine, the presser

foot is in the same place as in the patent, but the combing wheel is some distance in front of it; i. e., near the middle instead of the rear end of the sheet. The two are not supported on each other, but each is independently supported, when not in action, by the frame of the machine. They act alternately as in the Briggs machine. It is vital to the correct operation of the Briggs machine that the hold of the presser foot shall be released when the combing wheel is in operation, and that when the combing wheel is out of action and the sheet is to be drawn forward the presser foot shall come into action. The language of the claim is broad enough to cover any mechanism embodying this alternate action of the presser foot and combing roll.

This was the interpretation which the defendant itself originally put upon this claim. During the negotiations which led up to the sale of this patent the defendant contended that:

"Claim 10 covers the alternate raising and lowering of the presser foot and alternate lowering and raising of the comb wheel. This is a broad claim, and the mode of operation and the devices therein specified are essential, as we understand it, to the successful operation of such a feeder."

What the defendant wrote and said to the plaintiff whether its statements be called representations or threats, established its position as to the subject-matter and scope of this patent. It was from the advantage of that position that the defendant sold to the plaintiff. Its statements did not relate simply to matters of law as the defendant erroneously contends; they involved important matters of fact; and they were acted on by the plaintiff. The plaintiff had a right to rely on what the defendant said as to the subject-matter that was being sold; it does not appear that the plaintiff was negligent in doing so. The defendant now repudiates its former position, and says, in effect, that the plaintiff was simple, or timid, or mistaken, to have been influenced by its assertions. But we do not think it open to a vendor to play fast and loose with the vendee in such fashion. Having, as owner of the Briggs patent, stated the bounds of the monopoly thereby conferred, in negotiations which led to the sale of it, the defendant cannot, as against the person to whom its statements were made, and who acted on such statements, be heard to assert a different position.

"Parties must take the consequences of the position they assume. They are estopped to deny the reality of the state of things which they have made appear to exist, and upon which others have been led to rely." Swayne, J., Casey v. Galli, 94 U. S. 673, 680, 24 L. Ed. 168.

"It is, accordingly, established doctrine that whenever an act is done or statement made by a party, which cannot be contradicted without fraud on his part and injury to others, whose conduct has been influenced by the act or admission, the character of an estoppel will attach to what otherwise would be mere matter of evidence." Davis, J., Dair v. United States, 16 Wall. 1, 4, 21 L. Ed. 491.

See, also, Dickerson v. Colgrove, 100 U. S. 578, 25 L. Ed. 618; Schroeder v. Young, 161 U. S. 334, 344, 16 Sup. Ct. 512, 40 L. Ed. 721.

We are of opinion that the defendant's original position as to the scope of this claim was the correct one, and that, aside from any question of estoppel, the claim ought not to be narrowed to the specific construction shown in the patent, as the defendant now contends. There is no question but what the elements of this claim, so construed, are found in the defendant's device.

It follows that the defendant has infringed the Briggs patent, and that as to this patent the decree of the District Court was right and should be affirmed.

[3] As to the White patent: The successive sheets of paper in a pile do not always move forward, under the action of the combing roll, exactly the same distance. It is necessary, as has been said, that the top sheet should each time be advanced just far enough to be caught properly by the forwarding rolls or the drawing-in mechanism of the receiving machine. Without a device to regulate this distance, some sheets would be moved too far forward, and some not far enough. The necessary regulation is accomplished by a trigger actuated by the forward end of the top sheet, which operates mechanism that throws the combing roll out of action when the desired point is reached by the sheet. This broad idea was old at the time of White's invention.

The claims of the White patent in suit are Nos. 1–4, 6, 9, 21–23. It will only be necessary to quote one of them, as the crucial element, "a latching device for holding said feeding device in action," is in substance common to all.

"1. In a sheet feeder, the combination of a sheet-feeding device, means for throwing said device into action, a latching device for holding said feeding device in action, and mechanical devices for controlling said latching device by the sheet."

The defendant contends that it does not infringe any of the claims in suit because its machine has "no latching device for holding the feeding device in action."

In the White structure, the combing roll is suspended on links, jointed like the elbow joint of a man's arm. Bending the links lifts the combing roll out of contact with the paper. When the links are straightened, the roll rests on the paper, being kept there by its own weight. Normally the links are kept bent by a spring, and the roll (which revolves continually) is off the paper. It is put into action by a cam which momentarily overcomes the spring, thereby allowing the roll to fall upon the paper. The cam goes out of action very quickly, before it is time for the roll to leave the paper. The spring, unless prevented from doing so, would thereupon pull the roll out of action. This is prevented by a "latch" mechanism, which, set by the cam, latches the spring, thereby "holding said feeding device in action" (claim 1) until the front edge of the sheet of paper reaches and trips the trigger. This releases the latch; the spring is freed, and instantly bends the link, which lifts the roll off the paper. The action of the cam may be likened to cocking a gun, which is discharged by the contact of the paper with the trigger. In every one of the claims in suit this latch and holding-in-action mechanism is incorporated as an element.

In the defendant's machine also the combing roll revolves continuously, is held by its own weight in contact with the top sheet when in action, and is put out of action by mechanism controlled by a trigger. Here the resemblance ceases, for the means by which these results are accomplished are essentially different in the two devices. In the complainant's machine, the combing roll moves up and down in the same place. In the defendant's, it has a forward and back movement

not found at all in the other. The trigger of the plaintiff's machine operates through comparatively simple mechanism to release the spring, whereupon the roll flies up. The trigger of the defendant's machine operates through rather complicated mechanism, which need not be described, to arrest at the proper instant, an inclined plane, called a "lifting foot," in the path of the horizontally advancing combing roll. The roll thereupon, owing to its forward movement, slides up the inclined plane off the paper, and goes out of action. Roll and lifting foot then return to their first positions; the trigger resets itself after the sheet has cleared from it; and the cycle is repeated.

The central idea of the White machine is a roll which, normally held out of contact with the paper by a spring, is dropped into contact at the proper time by a cam overcoming the spring, and remains in contact because a latching device restrains the spring until released by trigger mechanism. The central idea of the defendant's machine is a roll supported on a cam which is allowed by the movement of the cam to fall upon the paper and to remain there until, by reason of its forward motion along the paper, it rides out on the lifting foot.

There is in the defendant's machine a pawl in the mechanism between the trigger and the lifting foot which has a tension spring to keep it in engagement with its ratchet. The pawl is controlled by a "latch," so called, connected with the trigger. This ratchet and pawl control the motions of the lifting foot, and through it the time when the combing roll leaves the paper. There is nothing in the complainant's machine at all corresponding with this ratchet, pawl, and lifting foot. They are utterly different in construction and in operation from the heavy spring, and its controlling latch, which latch forms an element of the claims in suit. Moreover, as to the pawl, it is the engagement, not the release of it, which arrests the forward movement of the lifting foot and allows the roll to climb out of action. If the pawl can be regarded as a latch, it is one which throws the comb wheel out of action, not one which, in the language of the claim, "holds it in action." The so-called "latch" of the defendant's machine holds the pawl out of engagement with the ratchet; it has no other control of the combing roll, and does not restrain any force tending to lift it. It has no effect whatever to hold the feeding device in action. The mechanism by which the feeding device is put into action is wholly independent of this "latch."

The claims of the White patent relate to mechanism therein described. The "latching device" referred to in them is the latch therein used to restrain the operation of the spring and prevent the roll from being lifted by the spring until the proper instant. The words in the claim, "holding said feeding device in action," are, standing by themselves, inaccurate. What holds the combing roll against the paper is the force of gravity; and it is plain that this is not what the word "holding" in the claim refers to. The claim is predicated on a construction in which there is a force which constantly tends to lift the combing roll out of action, and is restrained from doing so by a "latching device." The latching device "holds the feeding device in action" only by restraining the action of this force. The latching device of the patent could not possibly be incorporated into the defendant's machine; the result which it accomplishes in the plaintiff's machine is

brought about in the defendant's machine in a radically different manner.

The defendant is estopped, as before stated, to deny that the claims cover what they purport to cover, and what it asserted they covered; and it is not, under the circumstances disclosed, entitled to close limitation and nice discriminations in determining what that purport is. The defendant, however, when owner of the White patent, never claimed, so far as appears, that it was entitled to a construction broad enough to cover the defendant's present machine. The utmost it asserted was that the claims could not be avoided "if a latch is used for *holding down* the comb wheel," etc. The plaintiff's machine did use a latch to restrain a spring, the release of which by trigger mechanism raised the combing roll. In this particular the machine now made by the defendant is quite different, both in construction and mode of operation, from that formerly made by the plaintiff.

The plaintiff's position is, in effect, that the latch element in the claims in suit, which, as therein described, is for "holding said feeding device in action," includes all latch-controlled mechanism for throwing the feeding device out of action; and this was the view taken by the District Court. We are unable to agree that the claims are entitled to so broad a construction.

[4] We are of opinion, therefore, that the defendant's machine does not infringe the White patent, and that as to that patent the decree of the District Court was erroneous, and must be reversed.

The decree of the District Court, so far as it relates to the White patent, is reversed, and the case is remanded to that court for further proceedings not inconsistent with the opinion passed down this day; and the appellant recovers its costs of appeal.

Rescript.

We have carefully reconsidered the question of costs. Only one bill was filed, and a single decree was entered in the court below, from which this appeal was taken. The issue upon which the appellant has prevailed seems to us of sufficient importance to entitle it to recover costs on the appeal. See Northern Trust Co. v. Snyder, 77 Fed. 818, 23 C. C. A. 480; Johnson v. Foos Mfg. Co., 141 Fed. 73, 90, 72 C. C. A. 105; The Steam Dredge No. 1, 134 Fed. 161, 168, 67 C. C. A. 67, 69 L. R. A. 293; The Horace B. Parker, 76 Fed. 238, 240, 22 C. C. A. 418.

The appellee, who has prevailed on the Briggs patent, moves that the decree of this court be amended by inserting therein an explicit statement that the decree of the District Court as to the Briggs patent is affirmed. We perceive no objection to such an amendment of the decree, with the qualification made necessary by the fact that since the entry of the decree in the court below the Briggs patent has expired.

It is ordered that the decree heretofore entered be rescinded, and that in lieu thereof the following decree be now entered:

The decree of the District Court, so far as it relates to the Briggs patent, is affirmed, except that no injunction is to issue for infringement of said patent; the decree of the District Court, so far as it relates to the White patent, is reversed, and the case is remanded to that court for further proceedings not inconsistent with the opinion passed down on November 11, 1915; and the appellant recovers its costs of appeal.

WILSON & WILLARD MFG. CO. et al. v. BOLE et al.

(Circuit Court of Appeals, Ninth Circuit. November 8, 1915.)

No. 2641.

1. PATENTS ⟹312—SUIT FOR INFRINGEMENT—BURDEN OF PROOF.
While it is the general rule that one who attacks the validity of a patent issued to another must make out his case by proof beyond a reasonable doubt, such rule does not apply to the question of priority of invention, where at the time the patent in suit was issued defendant had an application pending for the same invention, and the patent was therefore issued inadvertently, instead of being put in interference, as required by Rev. St. § 4904 (Comp. St. 1913, § 9449).

[Ed. Note.—For other cases, see Patents, Cent. Dig. §§ 544–549; Dec. Dig. ⟹312.]

2. PATENTS ⟹62—SUIT FOR INFRINGEMENT—PRIORITY OF INVENTION.
Evidence considered, and held to show that defendant, and not complainant, was the original inventor of the device of the patent in suit, for which defendant had an application pending at the time such patent was issued.

[Ed. Note.—For other cases, see Patents, Cent. Dig. § 78; Dec. Dig. ⟹62.]

3. PATENTS ⟹328—PRIORITY OF INVENTION—UNDER-REAMER.
The device of patent No. 1,080,136, for an under-reamer for oil wells, granted to R. E. Bole December 2, 1913, *held* to have been the invention of Elihu C. Wilson, and not of the patentee.

Appeal from the District Court of the United States for the Southern Division of the Southern District of California; Oscar A. Trippet, Judge.

Suit in equity by Robert E. Bole and Edward Double against the Wilson & Willard Manufacturing Company and Elihu C. Wilson. Decree for complainants, and defendants appeal. Reversed.

Raymond Ives Blakeslee, of Los Angeles, Cal., for appellants.

Frederick S. Lyon, of Los Angeles, Cal., for appellees.

Before GILBERT and ROSS, Circuit Judges, and RUDKIN, District Judge.

RUDKIN, District Judge. This was a suit for infringement of letters patent and for an accounting. From an interlocutory decree in favor of the plaintiffs, the present appeal is prosecuted.

For a number of years last past the appellant Wilson & Willard Manufacturing Company has been engaged in the manufacture and sale of under-reamers and other machinery used chiefly in oil well construction. Its place of business is Los Angeles, Cal. The appellant Wilson is president and general manager of the company, and for some years prior to 1913 the appellee Bole was either an employé of the company or intimately associated with the company in a business way. During the period in question under-reamers of different types were manufactured and sold at the shops of the appellant company, but the present controversy involves only a single-piece key which serves as a lock

and support for the spring which sustains the bit-carrying rod within the body of the reamer. Inasmuch as the novelty or patentability of the device is not here in question, a more detailed description of the reamer and its parts is not deemed material at this time.

On the 19th day of February, 1911, appellee Bole made application for letters patent on this single-piece key, and the patent now in suit was granted on that application under date of December 2, 1913. On the 18th day of March, 1913, the appellant Wilson made application for letters patent on the same device. The latter application is still pending. It will thus be observed that the Bole patent issued while the Wilson application for a patent on the same device was pending in the Patent Office.

The principal question in the case is the single one: Who was the inventor of the device in question, and therefore entitled to the patent? This, of course, is largely a question of fact. The contention of the different parties may be briefly summarized as follows:

The appellee Bole testified that in the month of September, 1908, he went from Los Angeles to Maricopa to take temporary charge of the shops of the Sunset-Monarch Oil Company at that place; that before he arrived at Maricopa the superintendent of the Monarch Company had sent a man from San Francisco to fill the position; that one Heber, general foreman of the Monarch Company, thereupon agreed to pay the witness the expenses of his trip and give him an order for a reamer and a Bole spear; that before giving the order for the reamer Heber informed the witness that his company had had so much difficulty with the reamers manufactured by the appellant company in the past that they did not desire to use them further; that the witness explained to Heber that this difficulty could be overcome by certain changes, and the witness then made a sketch of the key or device now in controversy, showing how the key could be driven in place from the side of the reamer, and removed by driving a drift under one end of the key, and then driving the key out from the opposite end; that with this change in contemplation Heber gave the order for the reamer; that at the same time and place the witness also explained the device to one Adams, a machinist in the employ of the Monarch Company; that an order for the reamer with these changes outlined was mailed to the appellant company at Los Angeles, or at the residence address of one Willard, a representative of the company; that this letter contained sketches and a full description of the key or device; that the witness returned to Los Angeles in the course of a week or ten days, and thereafter had numerous conversations with the appellant Wilson concerning the new key, but Wilson refused to adopt his suggestions or to use the key; that in the early part of 1911 the appellant company was having trouble with its reamers because of the difficulty of taking them apart, and its sales were falling off; that the witness again asked Wilson why he did not adopt the suggestions contained in his letter from Maricopa, and the matter was taken up and the key in controversy was then manufactured and installed under the direction and supervision of the witness. Bole is corroborated by Adams and Heber as to what transpired at Maricopa, the latter witness testifying by deposition. Each witness

prepared a sketch such as was exhibited to him by Bole at Maricopa. The witness Willard testified that he received the Maricopa letter, and thought it suggested some changes in the reamer, but what the changes were he could not recall. The appellees also offered in evidence a sketch of the single-piece key and a lever or other device for removing the same, bearing date January 27, 1911, and witnessed by two witnesses. Another witness for the appellees testified that some time during the month of February, 1911, he overheard some discussion between Bole and Wilson over the removal of the key, and saw Bole remove it by driving an old file under one end of it.

On the other hand, the appellant Wilson testified that the idea of using the single-piece key occurred to him as far back as 1906 or 1907; that on the 26th day of January, 1911, his company received an order from the Pacific Iron Works of McKittrick for one of their old-style reamers, the manufacture of which had been discontinued some years before on account of the weakness of some of the parts; that he then took up the question of the adoption of a new key, and after making sketches and considering the matter for some time, and discussing the subject with his brother, he called some of the employés of his company together during the first days of February, 1911, to get their opinion as to the best form of key to adopt; that the present form of key was there agreed upon, and was soon thereafter manufactured in the shops of the appellant company under his direction and supervision, and has been in general use ever since. The witness further testified that he had at no time received any information from the appellee Bole concerning the new key, except a suggestion at the February conference as to the manner of removing it. The witness further testified that the mode of removing the key by driving a drift under one end of it was first discovered by one of his employés some time after the key was manufactured and installed. This witness is fully corroborated by those present at the February conference to the extent that the form and nature of the device was there discussed; and that the appellant Wilson then had in his possession sketches of the present key. He was further corroborated by the testimony of two witnesses to the effect that the mode of removing the key was first discovered by one of his employés.

[1] There are many other matters discussed in the testimony, some wholly immaterial, but the foregoing is a fair summary of the principal testimony in the case. On these facts the appellees contend that the burden is upon the appellants to establish their case beyond a reasonable doubt in the face of the patent, and that, the court below having decreed in their favor on conflicting testimony, this court should not interfere. The appellants, on the other hand, controvert this rule of law, and contend that in any event the overwhelming weight of the testimony is in their favor.

The general rule that a person who attacks the validity of a patent issued to another must make out his case by clear and satisfactory proof, or by proof beyond a reasonable doubt, will not be gainsaid. But this rule is founded in reason. It presupposes an adjudication by the Patent Office of every fact essential to the validity of the patent,

and one who attacks that adjudication in a collateral proceeding must establish his claim by clear and satisfactory proof, or, as is often said, by proof beyond a reasonable doubt. But where it appears that there has been no such adjudication by the Patent Office, as where the patent has been issued through inadvertence or mistake, the reason upon which the rule is founded ceases, and the rule ceases with it. Section 4904 of the Revised Statutes (Comp. St. 1913, § 9449) provides that:

"Whenever an application is made for a patent which, in the opinion of the Commissioner, would interfere with any pending application, or with any unexpired patent, he shall give notice thereof to the applicants, or applicant and patentee, as the case may be, and shall direct the primary examiner to proceed to determine the question of priority of invention."

Instead of declaring an interference between the Bole and Wilson applications to determine the question of priority of invention, the Patent Office inadvertently issued the Bole patent. It would be illogical in the extreme to now hold that such a patent casts upon Wilson the burden of proving his case beyond a reasonable doubt, whereas, if the same inadvertence had resulted in the issuance of a patent to Wilson, the like burden would fall upon Bole. On the contrary, it has been repeatedly held by the Patent Office and by the Supreme Court of the District of Columbia, in interference cases, that a patent issued through inadvertence or mistake casts no such burden upon the party claiming against it. 30 Cyc. 894, and cases cited. The equity and justice of this rule is apparent and should control here. The fact that the trial court decreed in favor of the appellees on conflicting testimony is entitled to consideration; but if this court is convinced that the decree is erroneous, after giving due weight and consideration to the superior advantages possessed by the trial court, a reversal must follow.

[2] There are many inherent weaknesses in the case made by the appellees. The failure on the part of Bole to perfect his invention or reduce it to actual practice from September, 1908, until February, 1911, has not been satisfactorily explained. The pressure of other business was the only explanation offered, but in view of the simplicity of the device this explanation is far from satisfactory. Indeed, Bole never perfected his invention, or reduced it to practice at all, for the overwhelming weight of the testimony shows that this was done in the shops of the appellant company, by its employés, at its expense, and under the direction and supervision of the appellant Wilson. The fact that Bole permitted the appellants to manufacture and sell the device for a period of nearly 2 years without objection or protest, and did not file his application for a patent until 4½ years after his alleged discovery, and not until after he had difficulties with the appellants over the settlement of an account, likewise tells against him. The sketch of January 27, 1911, is a peculiar and suspicious piece of evidence. It is on a piece of tracing paper of small dimensions, evidently cut from a larger piece. The date, "January 27, 1911," appears twice across the top of the sketch; then appears a sketch of the single-piece key and a lever or other device for its removal. Be-

neath these are the words: "Key remover for new reamer if adopted." At the bottom appear the words: "Robert E. Bole, Inventor, Jan. 27th, 1911." The sketch and above writings are in indelible pencil, while across the center in ink are the words: "Witness—W. H. Fahnestock. E. F. Grigsby."

Bole testified that he fully explained this sketch to Fahnestock and Grigsby at the time they witnessed the same. Fahnestock and Grigsby, on the other hand, testified that they had no recollection whatever of any such explanation, or of seeing the sketch until long after its date, or that they had signed it, although admitting that the signatures were probably genuine. Furthermore, the difficulty of removing the key seems at all times to have been an obstacle in the way of its adoption. It is now conceded on all hands that driving a drift under the end of the key, and then driving the key out from the opposite end, is the simple and expeditious way of accomplishing that result, and if this was a part of Bole's original discovery in 1908, why should he be making sketches of levers for that purpose in 1911? This sketch is important, if genuine, because it would at least show that Bole had knowledge of the invention as early as January 27, 1911, and before the conference of February, 1911; but we are far from convinced that the sketch is genuine, or what it purports to be.

The appellees criticize the testimony relating to the conference of February, 1911, because of certain discrepancies in the testimony of the different witnesses as to how the conference was called, what was said, who was present, when and where the conference was held, etc. These minor discrepancies tend to strengthen rather than weaken the testimony. The witnesses were testifying to what transpired more than four years before the trial, and if they all agreed upon every detail it would afford strong and convincing proof that their testimony was prearranged. But whether it be called a conference or not, and whether it was called or not, the testimony shows beyond controversy that this form of key was discussed by Wilson and some of his associates and employés in the shop or office of the appellant company early in February, 1911, and that Wilson at that time had in his possession sketches of the key. We think the testimony shows with equal certainty that the appellee Bole was present at that conference, and his denial of that fact does not strengthen his testimony in other respects. The testimony of Heber and Adams is not convincing. They are both very friendly to the appellee Bole, the latter admitting that he would go a long way to help him out. And in this connection it is a significant fact that while Heber refused to order a reamer, except on the strength of the changes suggested by Bole, yet the reamer delivered was of standard make without a change of any kind. If there was any explanation by either of the appellants as to why the order was not filled as sent in, or if there was any objection or protest by Heber or his company because of that fact, the record is silent in regard thereto. The testimony of the witness Willard in relation to the Maricopa letter is so uncertain and contradictory that it is of little, if any, value. A further review of the testimony would unduly extend this opinion, but suffice it to say that a careful examina-

tion of the record convinces us that the appellant Wilson was the inventor, reduced the device to practice, and was entitled to a patent.

We might say in this connection that after the issuance of the Bole patent an interference was declared in the Patent Office between it and the Wilson application. A hearing was had on that interference before the Examiner of Interferences. The parties were represented by the same counsel, and substantially the same witnesses were examined. The record in this case shows that there was no controlling differences between the testimony before the Patent Office and before the court below. After a careful review of the testimony, the Examiner of Interferences found that Wilson, and not Bole, was entitled to a patent. An appeal was taken from that decision to the Examiners in Chief, where the testimony was again reviewed, and the decision of the Examiner of Interferences affirmed. An appeal has been taken from the latter decision to the Commissioner of Patents, where the matter is now pending. The first decision was prior to the decision in the court below, but the decision on appeal was of a later date. Had a final decision been reached in the interference proceedings in the Patent Office, that decision would be controlling in a large measure upon the courts. But what, if any, effect should be given to the decisions of the Examiner of Interferences and the Examiners in Chief in the present state of the record, we will not inquire, further than to state that their conclusion upon the facts is in full accord with our own.

In view of the conclusion we have reached on the merits of the case, we will not discuss or consider the admissibility of the Heber deposition.

The decree is reversed, with directions to dismiss the bill.

CHEATHAM ELECTRIC SWITCHING DEVICE CO. v. BROOKLYN RAPID TRANSIT CO. et al.

(District Court, E. D. New York. October 16, 1915.)

1. JUDGMENT ⟹707—RES JUDICATA—PRIORITY OF PARTIES.
   A decree is not res judicata as between other parties than those who were involved in the suit, unless privity in the way of succession to legal burdens is shown.
   [Ed. Note.—For other cases, see Judgment, Cent. Dig. § 1230; Dec. Dig. ⟹707.]
2. PATENTS ⟹328—INFRINGEMENT—SWITCH-OPERATING MECHANISM.
   The Cheatham patent, No. 612,702, for an electrically controlled switch-operating mechanism for railways, claim 3, *held* not infringed by the device of the Collins patent, No. 1,152,791, granted after interference proceedings, in which Cheatham claimed the invention as new and as his own, thus admitting the limitation of the claim in suit.
3. PATENTS ⟹237—INFRINGEMENT—EQUIVALENT PARTS.
   Similarity of result is not the test of equivalency.
   [Ed. Note.—For other cases, see Patents, Cent. Dig. §§ 374, 375; Dec. Dig. ⟹237.]

In Equity. Suit by the Cheatham Electric Switching Device Company against the Brooklyn Rapid Transit Company, the Brooklyn Heights Railroad Company, the Nassau Electric Railroad Company, the Brooklyn, Queens County & Suburban Railroad Company, and the Transit Development Company. On final hearing. Decree for defendants.

See, also, 194 Fed. 963, 114 C. C. A. 599; 197 Fed. 563; 209 Fed. 230, 126 C. C. A. 297; 226 Fed. 495.

O. Ellery Edwards, Jr., of New York City, for plaintiff.
Thomas J. Johnston, of New York City, for defendants.

CHATFIELD, District Judge. This action is based upon claim 3 of patent No. 612,702, issued October 18, 1898, upon an application filed March 12th of that year. The claim is as follows:

"3. In an electrically controlled switch-operating mechanism, the combination with a trolley wire and trolley wheel, and a double solenoid having a core armature connected with the switch point rail, of parallel contact strips supported at opposite sides of the trolley wire and having upward-inclined ends, one of said strips being integral throughout and the other being divided into three sections, an electro-magnet having a spring armature and two contact plates for said armature, the winding of said electro-magnet being connected with the trolley wire and with the integral contact strip, a wire connecting the spring armature with the middle section of the divided contact strip, and wires connecting the contact plates of said spring armature with the windings of the double solenoid, substantially as described."

The same claim of this particular patent and claims 1, 2, and 4 of patent No. 917,541, issued April 6, 1909, to Mr. Cheatham, for an improved form of the same sort of device, were the basis of a suit in this court, tried with a jury, against the Transit Development Company, one of the defendants herein. Verdict therein for the plaintiff was affirmed upon appeal. 194 Fed. 963, 114 C. C. A. 599.

[1] One of the questions seriously urged by the plaintiff in this case is the proposition of res adjudicata. It may be assumed that a patent adjudicated valid in a prior action will be considered as valid in an action between the same parties. In any other action before the same court, where the issues and the testimony present substantially the same questions as those previously decided, the previous determination would be taken as conclusive, unless some previously unnoted error or omission is presented for consideration. But in the latter case examination of the issue is not beyond the right of the court, as it would be if the question presented by the record had been finally adjudicated *between the parties.*

This proposition was discussed in connection with an action by the plaintiff herein to collect damages for infringement by the use of more of the devices held as infringements in the first action (in 197 Fed. 563) and to extend that decree to cover alleged violation of the injunction by the use of the switch (which is the basis of the present action and which is known as the "type 15 switch") by the various roads comprising the Brooklyn Rapid Transit system in the borough of Brooklyn.

A motion to dismiss for alleged lack of jurisdiction over parties defendant in the second action was discussed in a decision reported in 191 Fed. 727. Decree in that action was based upon an opinion reported in 203 Fed. 285, and affirmed in an opinion reported in 209 Fed. 230, 126 C. C. A. 297. It will thus be seen that much discussion of these patents and of the relation of the parties has already been had both in this and the appellate court.

Much point has been made in this action because certain additional defendants, all of whom are integral members of the system which is controlled or leased and operated by the Brooklyn Rapid Transit Company, are made defendants in an endeavor to bring into the one suit all of the devices under operation on the various street railroads in the borough of Brooklyn. If the question were important, it would be easy to hold, upon the evidence before the court, that identity of information, responsibility, and management was sufficiently shown to hold all of these parties, in the absence of new issues or newly discovered evidence, to any legal effects flowing from the existence of the judgments in the previous suits. On the other hand, there is sufficient difference in the corporate identity of the parties to this action, so that entirely different corporate responsibilities might follow as to liability for the different parts of the judgment.

A decree is not res adjudicata as between other parties than those who have been involved in the preceding litigation, unless privity in the way of succession to legal burdens is shown. The plaintiff has included the Transit Development Company (former defendant), and added the Brooklyn Rapid Transit Company, which appears to control or direct the activities of the constituent companies. It has also included all of these companies by which the switches are used, in order to prevent evasion of responsibility. In so doing, it seeks to unite in one action all the alleged infringing devices, and to be able to show profits to the defendants, as well as damage to the plaintiff, from each device. It is thus avoiding multiplicity of suits, and, as has been stated, the

relations of the parties are such that their rights can be disposed of in the one action, particularly where the use of the devices is made substantially one by the participation of the Transit Development Company and the Brooklyn Rapid Transit Company, and where community of knowledge is established.

But any of the new defendants could raise the separate issue of non-infringement, and any of these defendants must be allowed to try the case, and to urge all the defenses, as if it had been sued independently of those defendants who were directly concerned or participated as parties in the preceding action.

But, though some of the defendants can therefore be heard upon the issue of validity of the patent in suit, it makes no substantial difference in the present case and upon the present record. Upon similar testimony to that presented in the former action, so far as this issue is concerned, and upon the presumption of the patent, the same result must be reached, while the court has also to take into account the fact that, in a suit in this court, this patent has been held valid. Further than this, the validity of the patent and of claim 3, so far as it is based upon an invention and that this invention was that of Mr. Cheatham, is not seriously contested.

[2] The defense of invalidity is restricted to an attempt to narrow claim 3, with which we are concerned in this action, so as to exclude the structure used by the defendants herein, and thus to avoid the charge of infringement of that particular claim as so construed.

Again, the plaintiff claims that the decision of the trial before the jury renders this question res adjudicata against all the present defendants. But on this point the question of res adjudicata presents a slightly different issue.

It is contended by the plaintiff that the previous trial decided this patent to be a pioneer patent, and that the present defendants are bound thereby. As was pointed out in the decision in 197 Fed. 563, the verdict of the jury, in general form, upon all the issues presented, even against the same defendants, left to the court the right to determine just how far an issue had been presented to the jury and just what the effect of the determination of that issue might be.

In the former case before the jury, even though it be assumed that the issue of validity of claim 3, and the issue of its originality as defined and explained in the sense of a basic or pioneer patent, may have been disposed of in the plaintiff's favor, nevertheless the interpretation of what those terms mean, just what is covered by that claim as a basic or pioneer claim, and just what structure would infringe it in that sense, is entirely open, unless the device is identical with that involved in that action. When we consider this question, we come down to exactly the same proposition which has been litigated by the defendants and which is involved in the question of infringement herein.

The court is prepared upon the present record to find that in so far as Mr. Cheatham devised a mechanism for throwing a switch point, by means of ground solenoids practically controlling or moving the switch point, in so far as he transmitted the current to those solenoids from an insulated section of the trolley wire, to which he communicated an elec-

tric current by the closing of a circuit with the flanges of the trolley wheel, and in so far as he planned to have the trolley wheel, when performing this function, separated or insulated from other portions of the trolley wire (either by running the trolley wheel down a shoe or incline, so that it was out of contact with the trolley wire itself, or by maintaining the trolley wire in a lifted position, where the trolley wheel would be out of contact with it), when he so proportioned the parts of his device that a solenoid would be operated by the quantity of current necessary to furnish motor power to the car, but not by the quantity of current that would be continually passing for the use of the lights and heaters, when he contemplated securing a uniform operation or movement of the switch by the application of the motor current, when the trolley wire was upon the so-called insulated or separated section of the parts (taking the place of the trolley wire for the purpose of furnishing current to the car and also of working the switching device), and when he thus made it possible to always operate a switch for a curve by passing over a particular section with power on, and to make it possible to always leave the switch set for the straight track when passing over that particular section with motor power off the controller, he was utilizing and applying ideas that in combination were shown by no one of the patents in the prior art.

Much discussion has been devoted by the experts to such patents as Goetz, No. 489,944, which illustrates a device having two sections of insulated track connected electrically each with one of two solenoids moving the switch point in opposite directions. Likewise two separate sections of the trolley wire may be so insulated from each other that while passing under either one, if the motor current be on the car, electricity will be sent through the section of the track upon which the car rests and move the point the corresponding way. If the car be moved over that track without current, the point will not be moved, but would be moved in the opposite direction by the use of current when the car is under the second or different section of the trolley wire. It will be seen that this would not operate if the motorman cannot use power at the precise point required, and would be of no avail if some preceding or succeeding car or vehicle interferes with his free movement.

The Stone & Webster patent, No. 511,173, of December 19, 1893, showing a set of magnets closing or opening the switch for the curve, according to the use of a current of greater or less intensity, by the motorman, when within a certain limited area under the trolley wire, cannot be operated by having the motor current entirely on or entirely off, but does show the idea of selection of the solenoid by having present a weak or strong current as the case may be.

Another patent cited, showing the operation of the switch with the current entirely on or entirely off, is the Hearn patent, No. 543,181, of July 23, 1895; but this requires the motorman to be able to see the switch point and to move it, when passing under a certain section of the trolley wire, by applying current at that time, if he wishes to move the switch point.

It is unnecessary to discuss the difficulties attendant upon maintaining switch points so that they can be seen under all conditions of weather

and dirt, or the difficulties connected with the necessity of having the motorman operate the switch while at a certain portion of the track and at the same time see which way the switch point is working.

A number of other patents, which illustrate the differences between overhead and underhead trolley construction, raise somewhat the same questions, but none of them completely embody the ideas of the Cheatham patent. It would seem, therefore, that Cheatham was the first person to practically use what is called a "shunt circuit" to set the contact point (or select the contact point) to throw the switch by means of a solenoid, and to transmit this shunt circuit from a portion of the insulated section of wire, which the motorman could easily see, and while under which nothing more would be required than to have his motor current on or off.

As was stated in the charge to the jury in the preceding trial, a patent covering that idea would be a pioneer patent, if the art of making electric switches was based upon and followed the use of these general ideas. Such a patent would not have to be basic, to the extent of depending upon one sole, original conception, which was set forth in and which substantially comprised the entire claim of invention. The idea of Cheatham's patent was not a method patent. The turning of a switch point by means of transmitting electric current was old. The idea of insulating a section of the wire, so as to send a current only when the car was under the insulated section, was old. The idea of having the switch point turn or move when the current was on, and not move when the current was off, was old. But the combination of these features, and the application of the "current on" and "current off" principle to a device which would automatically or always send an electric current to make connection, so as to set the switch point in the desired position, by merely having the current on or off (whether or not the switch point had previously been in the desired position) was first shown in the Cheatham patent.

In the absence of the file wrapper, it is impossible to tell how broadly Mr. Cheatham sought to describe any mechanical instrumentality in the form of an insulated appliance (to take the place of a section of the trolley wire) with the necessary connections to send the requisite currents to accomplish the desired result. But, as the patent was issued, claim 3, which is in suit, seems to be the broadest of the claims which were allowed over the prior art. This claim has in it a number of features admittedly those of the prior art. The use of electricity to operate the mechanism, the use of the trolley wire and the trolley wheel to carry the current, of the solenoid connected with the switch point, of an electro-magnet, producing a contact when desired, wire connections between the various parts as required, and separation of the strips so as to insulate from each other (or separation of a strip into parts so as to insulate the various portions), and a physical inclining or turning up of the end of some strip to guide the trolley wheel, are all shown in the different patents of the prior art. But the *combination* described in claim 3 was new.

During the course of the trial an illustrative model called "type 14," which was the form of device charged to be an infringement in the

action tried before the jury, was used by the experts on both sides as a physical embodiment of claim 3. Examination of the physical exhibit, consisting of the record on appeal in that action, for the purpose of determining what were the issues and the subject-matter of that suit, accurately identifies the device which was there under consideration, and the determination of the appeal, affirming the verdict of the jury, sufficiently fixed as a matter of law the likeness of that device to that described in claim 3 of the patent in suit.

Objection has been made by the defendants to the use of this illustrative model; but, as has been said, both experts, accepting the determination of the previous action as authority therefor, made their comparisons in the present suit between this exhibit and the so-called type 15 switch of the defendant companies. No legal rights of the defendants seem to have been invaded thereby, and the convenience of so doing (instead of carrying the examination back to another set of exhibits, with further complexities introduced by other details of construction) made it seem unnecessary to require the plaintiff to add to the record by either bringing in or substituting the Cheatham exhibit of the previous action. The fact that both experts were able to use the No. 14 switch as an illustrative model shows that no accurate basis exists for objection on this point.

The device known as type 15 is:

"An electrically controlled switch-operating mechanism" combined "with a trolley wire and trolley wheel and a double solenoid having a core armature connected with a switch point rail," * * * "an electro-magnet," * * * "two contact plates" for the sending of current to "the windings of the double solenoid" by means of wires, * * * the "winding of said electro-magnet being connected with the trolley wire and with the" contact strip.

The points of difference between this device and the exact language of claim 3 arise from the words:

"Parallel contact strips supported at opposite sides of the trolley wire and having upward-inclined ends, one of said strips being integral throughout and the other being divided into three sections," and "an electro-magnet having a spring armature and two contact plates for said armature."

In claim 3 the winding of the electro-magnet is connected with the integral contact strip, and a wire connects the spring armature with the middle section of the divided contact strip. It is, of course, evident that, if these contact strips do not exist in this form, the wiring could not be thus accurately described, and on this point substantially rests the defendants' claim of noninfringement.

In the plaintiff's structure, when the trolley wheel reaches the section where the switching device takes the place of the trolley wire, or where the switching device is attached to the trolley wire, the wheel is drawn from the trolley wire by the inclined ends of two strips, one on each side of the trolley wire. These need not be insulated from the trolley wire, unless connected with the next sections of the strips, but at some point in proceeding on this incline the trolley wheel leaves the trolley wire. In the defendants' structure, the trolley wheel is guided by the ends of two strips, or of a plate extending on both sides of the trolley wire, and at some point in the incline leaves the trolley wire.

In both structures it follows the two strips or the two edges of the single strip, as the case may be. In the Cheatham structure, one of the strips at this point is insulated so that no current reaches it unless it passes through the trolley wheel. In the defendants' structure, the entire strip receives current, and as the trolley wheel passes along the strip it raises the strip by the spring of the trolley pole, so that after a short distance the trolley wheel again runs up into contact with the trolley wire. In the Cheatham structure, after having passed beyond this middle or operating section, the wheel runs up ends inclined for the purpose, to again come in contact with the trolley wire.

In the Cheatham structure, one side of this middle or operating section—that is, one strip—is in electrical contact with the trolley wire; but of course the opposite section is not in contact and receives no electricity unless through the trolley wheel, and can send no current through the armature with which it is connected by wire, and hence to either solenoid, unless the trolley wheel is upon this section and is forming a conductor for the current.

In the defendants' structure, current is always present and ready to pass from both sides of the single strip forming this middle section (or, conversely, current is drawn through a wire connection, which passes through the magnet to this section and hence into the trolley wheel whenever the wheel is upon this part of the structure), if connection is made through the car controller, so as to allow the motor current to pass.

In other words, being electrically connected, the trolley wire, the wiring of the magnet and the section against which the trolley wheel is pressing have the same potential, and current will pass when the trolley wheel is connected with the ground.

In Cheatham, however, the potential is not the same between the middle portion or "dead" part of one contact strip and the "live" portion of the other contact strip (which is connected with the trolley wire through the wiring of the magnet) until the trolley wheel furnishes the electrical connection. A spring armature may, of course, be replaced by an armature so arranged as to operate by gravity, in the same way in which the spring would move the arm, and in the type 14 a gravity armature is used.

When, however, in the Cheatham device the trolley wheel transmits current (either motor current or heating current) from the live section to the insulated section, this current is carried by a wire to the armature and through the contact point then in connection to one of the solenoids. So Cheatham provides against waste by sending a current only during the time that the trolley wheel is present. In the type 15 switch the current is sent only after the trolley wheel raises an arm and establishes contact.

If while, under the Cheatham switching device, with the current off the trolley wheel, the motorman wishes to back up the car, and for this purpose turns on the current, he will leave the switch set for a curve, or set it for a curve. Upon again coming under the section, he may set the switch or not according to the way he manipulates his controller. In the defendants' device, inasmuch as the operating section is all of the potential of the trolley wire, and as, of course, no cur-

rent is passing from the mere presence of the trolley wheel, no effect is produced either by the movement of the trolley wheel on or off the section, or by the turning on or off of the current while the wheel is upon that section, unless there is a change in the position of the section itself.

This is illustrative, rather than distinctive or distinguishing. But the next step in the progress of the car produces a different result. In the Cheatham structure, the car at any time in its progress along the operating section of the device will throw the switch by the presence of a motor current for the car. At any point, also, it will set the switch point for a straight track by sending a weak (or lighting current) if the controller is off.

In the defendants' structure the presence or absence of the current makes no difference, until an independent step has intervened. By the raising of the arm or section, under the pressure of the trolley pole, an oscillating contact finger is tilted against a contact block. The lengths and angles of the parts allow this finger (when free) to tilt in but one direction. When contact is thus made, and the current passes to the solenoid connected with this contact point, the switch point will be moved or held in the position for a straight track, if the car controller is off. But if the motorman be taking motor current at the time that the force of the trolley pole lifts the arm, this current will be drawn through the wiring of the magnet which is connected to the operating section of the device, and the passage of this current will move the core of the magnet, so as to physically interpose it in the way of the movable finger which is about to be tipped by the lifting of the section.

This core thus interferes so as to tip the finger in the opposite direction, and thus to send the current through the opposite solenoid, and to set or maintain the track for the switch. It follows that in the defendants' structure the use of a trolley wheel with a nonconducting flange upon one side, as well as the use of a point (or toe) upon the core of the magnet, made of nonconducting material, would have no effect upon the operation of the device, as no current passes or is transmitted through these points, while in the Cheatham device, as shown in the illustrative model, current must pass from one side to the other of the trolley wheel and must pass through the part moved by the magnetic action of the magnet.

It is evident that, for ordinary purposes, a movable core, which is the idea of a solenoid, and a movable armature attracted or repelled by the magnetic force, are equivalents in effect; but the defendants contend that in this instance the difference between the so-called solenoid and the so-called relay, with an armature proper, shows a difference in principle of the entire device.

Upon a strict reading of claim 3, this contention would seem to be well taken. The defendants do not seek to avoid the presence of the electric current in the entire section with which the trolley wheel comes in contact. They employ an outside or independent means (like the Eaton patent, No. 622,133) to establish an electrical contact by which the current from the trolley wire is sent to one solenoid, and not the other. When the trolley wheel is to use current, they take advantage

of that current to interfere with (by moving a magnetic core) the movable finger before the trolley wheel reaches it, and thus change the action, so as to send the same current to the different solenoid.

In Cheatham the parts are so arranged that the trolley wheel must send a current. If current is being taken from the switching device for the car, then this current is sent directly to the solenoid to operate it in the desired direction, and this current, as it passes through the magnet, also sets the armature. If no motor current is to be taken by the trolley wheel, then a current will still be sent through the trolley wheel, so as to establish or maintain the switch point exactly as if the trolley wheel were running on the trolley wire, instead of a switching device.

The statement of these differences, however, emphasizes the chief point of likeness between the two structures. Both make use of electric current which will pass by the establishment of electrical contact. This contact depends upon a selection by the motorman, merely between having power off and power on when at a certain point in the track. Both devices use the strong motor current to actuate the core of a magnet and to arrange by its movement the necessary form of electrical contact to be used when the motor current is on the car. Both sides have cited cases as to the meaning of the term "equivalents" and as to the range that should be given to a patentee in claiming equivalents for the exact parts stated in the patent.

In O'Reilly v. Morse, 15 How. (56 U. S.) 62, 14 L. Ed. 601, the Morse patent for a telegraph, which was evidently a pioneer patent, was limited to the form of claims chosen by the inventor. In the case of Westinghouse v. Boyden Power Brake Co., 170 U. S. 537, 18 Sup. Ct. 707, 42 L. Ed. 1136, the patentee was held to the claims of the patent, rather than to the ultimate appreciation or breadth of idea involved in his original concept.

[3] It is evident that similarity of result is not the test of equivalency. Dey Time Register Co. v. Bundy (C. C.) 169 Fed. 807, affirmed 178 Fed. 812, 102 C. C. A. 260; Knapp v. Morss, 150 U. S. 221, 14 Sup. Ct. 81, 37 L. Ed. 1059; Wollensak v. Sargent, 151 U. S. 227, 14 Sup. Ct. 291, 38 L. Ed. 137. The effect of treating Mr. Cheatham as a pioneer in a limited sense presents a situation like that in Groth v. International Postal Supply Co., 61 Fed. 284, 9 C. C. A. 507, and in McClain v. Ortmayer, 141 U. S. 419, 12 Sup. Ct. 76, 35 L. Ed. 800, which will be cited more particularly upon a succeeding point.

From the standpoint of result and of mechanical effect, the solenoid of type 15, with a nonconducting toe, to trip a movable contact piece, is the equivalent of a relay magnet attracting a spring or gravity armature, which takes the place of the movable finger in transmitting current to two contact points. The sending of a motor current at one time and a lighting current at another, through the trolley wheel as a conductor, is in the same sense equivalent to sending the motor current to one solenoid and the lighting current to another solenoid, by a separate conductor, when the trolley wheel arranges the conducting member instead of forming the same.

A single contact strip, with a movable member to start the formation of the contact, is the equivalent of a member composed of two

parts placed parallel to each other, and with one of these parts used in the same way that the movable member accomplishes the result by other parts in the type 15 switch.

But similarity of result and equivalency in function does not make the parts mentioned the equivalent, as a whole, of the specific device set forth in claim 3 and the specifications of the Cheatham patent; nor does the court consider that the so-called "pioneer" claim of Cheatham, for a practical working device, entitles him to the use of all other practical working devices performing equivalent results.

It appears incidentally that the Patent Office had granted a patent for the No. 15 switch to one Roy V. Collins upon the 7th day of September, 1915, under No. 1,152,791. An interference in the Patent Office between Mr. Collins and Mr. Cheatham was the occasion for an affidavit by Mr. Cheatham, claiming as an inventor the so-called invention of Mr. Collins. In this affidavit Mr. Cheatham stated that the invention was new.

While it is not necessary to hold that Mr. Cheatham has thereby intentionally disavowed a broad construction of the patent in suit, nevertheless the situation created by the affidavit of Mr. Cheatham and the subsequent issuance of a patent to Mr. Collins is so entirely consistent with the interpretation which the court is making of the patent in suit that Mr. Cheatham would seem to be unable to rebut the effect of his affidavit and the presumption of the Collins patent, and it must be held that Mr. Cheatham himself has looked upon the language of his original patent as an unsatisfactory statement of what he now considers his real invention.

In McClain v. Ortmayer, 141 U. S. 419, 12 Sup. Ct. 76, 35 L. Ed. 800, the patentee was held to have abandoned an idea which he had not included in an earlier patent and which he had sought to cover by a second patent held invalid. The present case leaves Mr. Cheatham in a similar situation. The evidence shows that he may have been the first to use an idea which by its application embodied a principle broader than the idea stated in his patent. It does not appear that he understood the application of the broad principle to be of itself an invention, nor that in describing his device he attempted to do more than to accurately state the mechanical means which he had in mind to produce the result which he realized was to be desired. He did not attempt to claim the idea of accomplishing this result by all possible mechanical means for so doing. He claimed as invention a limited physical embodiment of what might have been expressed in the form of a device for a general purpose, with every range of equivalents in its parts.

The Patent Office might have granted, if Mr. Cheatham had made the claim, a broader patent; but the court cannot now extend the scope of the present patent, and do for Mr. Cheatham what he did not do exactly 17 years ago, when he stated his own claim of his invention and *of what* he desired protection by a patent.

The defendants may have a decree.

PHILADELPHIA RUBBER WORKS CO. v. PORTAGE RUBBER CO.

(District Court, N. D. Ohio, E. D. April 8, 1915.)

No. 149.

PATENTS ⟹328—VALIDITY AND INFRINGEMENT—PROCESS FOR DEVULCANIZING RUBBER WASTE.

The Marks patent, No. 635,141, for a process for devulcanization of vulcanized rubber waste, is void for lack of novelty and invention in view of the prior art, and also for indefiniteness in stating the degree of heat to be applied during the process and the time during which it should be continued; also *held* not infringed, if valid.

In Equity. Suit by the Philadelphia Rubber Works Company against the Portage Rubber Company. On final hearing. Decree for defendant.

Charles Neave, of New York City, for plaintiff.

Francis J. Wing, of Cleveland, Ohio, and Hagelbarger, Mottinger & Doolittle, of Akron, Ohio, for defendant.

CLARKE, District Judge. This is a suit in which infringement of United States letters patent No. 635,141 is claimed and the usual injunction and accounting are prayed for. The specification of the patent in suit states the object of the claimed invention to be:

"The devulcanization of rubber in vulcanized rubber waste, and the reclaiming of such rubber in a condition capable of being used for the various purposes for which fresh rubber is used and of being revulcanized."

It is also stated in the specification that:

"The invention consists in subjecting the ground rubber waste when submerged in a dilute alkaline solution—as for example, a 3 per cent. solution of caustic soda—to the action of great heat, say from 344° to 370° Fahrenheit, more or less, for 20 hours, more or less, under conditions which prevent the evaporation of any considerable quantity of the solution."

It is claimed for the process that it so removes vegetable fiber and sulphur from vulcanized rubber that, when the product of the process is thoroughly washed to remove the chemicals, there remains devulcanized rubber having substantially the characteristics of fresh rubber and capable of being used in like manner and for like purposes.

The process described consists in submerging the finely ground rubber waste in a dilute alkaline solution in a tightly closed vessel, which is inclosed within an outer vessel so constructed that by letting steam into this outer vessel the rubber waste and the solution in which it is submerged may be kept at a temperature of substantially 344° Fahrenheit for a period of not less than 20 hours.

The patent contains but a single claim, as follows:

"The described process for devulcanizing rubber waste which consists in submerging the finely-ground rubber waste in a dilute alkaline solution in a sealed vessel, in heating the contents of the vessel to a temperature of 344° Fahrenheit, more or less, substantially as specified, and in maintaining said temperature for 20 hours, more or less, substantially as specified."

⟹For other cases see same topic & KEY-NUMBER in all Key-Numbered Digests & Indexes

In its answer the defendant claims, first, that the patent is void for want of novelty. It is also claimed, in the alternative, that if the patent shall be held valid it should be strictly limited to the precise process described in the letters patent, and that the only departure from what was familiar practice in the art before this patent was allowed consists in stating a specific temperature at which the materials must be maintained during the process, and the number of hours until completed.

The defendant also denies that it is guilty of infringement, and claims in the testimony introduced that what it has done in the way of reclaiming rubber waste differs from the process described in the patent in suit, and has been done pursuant to the process described in United States letters patent No. 993,485, dated May 30, 1911, and granted to Wildman and Christy.

What the defendant does is described by complainant's witness, Shanks, as placing about 700 pounds of the ground rubber waste in a tank, and by the use of steam cooking it with muriatic acid for about 1½ to 2 hours. The product is then cooled with water and left to settle for about 30 minutes, when the tank is drained, and about 45 pounds of caustic soda put into it, and the mixture pumped into a retort filled up to within a foot of the top with water. This retort is then kept for 7 hours with a boiler steam pressure of 120 pounds. The product is then cooled and run through a rotary washer, and it then goes into a press, which squeezes the water out of it, resulting in the product which it is claimed is substantially similar to that obtained by the process of the patent in suit.

The application for the patent in suit was filed on February 27, 1899, and it contained three claims, all of which were rejected March 28, 1899. On April 20, 1899, the application was amended by substituting one claim for the three claims of the first application. On May 9, 1899, this claim was rejected for want of patentable novelty in the process, when considered in connection with the prior state of the art, and upon references given.

Notwithstanding this rejection, the department permitted further argument by counsel and the introduction of an affidavit by the applicant, which was accompanied by samples of the reclaimed rubber, with the result that the patent was allowed on October 17, 1899.

Claim 2 of the original application reads as follows:

Claim 2: "The process of treating vulcanized rubber waste which consists in submerging the ground rubber waste in a dilute alkaline solution, and in heating the mixture to a high temperature and maintaining that heat for a long period and at the same time preventing any considerable evaporation of the solution, substantially as specified."

The single claim allowed in the patent has been quoted in this opinion.

When the court came to examine this record it was discovered that the file wrapper and the testimony disclosed that the patentee was an educated and experienced chemist, being at the time of his application superintendent of a rubber company at Akron. In the affidavit which he filed in support of his application he gives the results of his

own experiments in applying the examiner's reference to the publication of Hoffer.

It also appears in the evidence that one of the plaintiff's expert witnesses, Fox, went into the employ of the rubber company, by which the patentee was then employed, in June, 1899, and immediately began experimenting in collaboration with the patentee, for the purpose of determining the amount of the caustic solution and the degree of heat which could be used to the best advantage in reclaiming rubber, and that he reported his results to Mr. Marks, although the claim allowed, specifying with great precision the degree of heat to be used and the time it must be maintained, was filed on April 20th of that year.

It also appeared that it is undisputed in the record that in vulcanizing rubber there is a chemical combination of the rubber with sulphur, and that the Marks patent process does not dissolve this chemical union and separate the rubber from the sulphur; that no process was known at the time the Marks patent was applied for and granted, and that no process is yet known, by which the sulphur combined with rubber in the process of vulcanization can be removed without destroying the rubber, and that rubber which has once been revulcanized and then devulcanized by the Marks process does not have all the characteristics, or substantially the same characteristics, as fresh crude rubber—the record showing that it is not used for all of the purposes for which crude rubber is used, and that it is much cheaper, because it is an inferior article.

With these facts before it, and noting that the specification of the patent in suit declares that the invention has for its object the devulcanizing of rubber in vulcanized rubber waste and the reclaiming of such rubber "in a condition capable of being used for the various purposes for which fresh rubber was being used, and of being revulcanized," and noting also that the specification declares that the result of the process is "devulcanized rubber having substantially the characteristics of fresh rubber and capable of being used in like manner and for like purposes," and also that in the arguments presented in support of the application it is distinctly declared that the process has the effect of breaking down the chemical union between the sulphur and rubber in vulcanized rubber, the court was of opinion that the record showed that the patentee, being an experienced chemist, must have known at the time he applied for the patent that the claim that the chemical union between the sulphur and the rubber was broken down by his process was not true, and since it seemed very obvious from the file wrapper that this claim constituted the only advance in the process upon what had gone before, and was therefore the reason for allowing the patent, the conviction became very strongly settled in the court's mind that the patent had been obtained by deliberate fraud on the part of the patentee. The court, however, concluding that the state of the pleadings was such that the question of fraud in obtaining the patent could not properly be considered, and that if it were made, justice required that the plaintiff should have an opportunity of meeting such a claim, counsel for the defendant was requested to amend his answer by setting up fraud in obtaining the patent, which was done.

The court then notified the parties that further testimony would be taken, limited to the question of fraud in obtaining the patent made by the amendment to the answer. Considerable testimony was taken on this question, with the result that the court is persuaded that the proof is not sufficient to justify setting aside the patent on the ground of fraud in procuring it.

The state of the knowledge of the chemistry of rubber and of the chemical combination of rubber with sulphur involved in vulcanization was in 1899, and still is, much less definite than the court supposed that it was from the reading of the record. The plasticity obtained in the product of the Marks process is such that the patentee claims that he honestly supposed at the time, and that he still believes, that the process produces some sort of a change in the chemical combination of sulphur and rubber existing in the vulcanized rubber treated, but that he is satisfied now that it does not result in a complete breaking down of chemical union.

While the court is persuaded that the representation that the chemical union of the sulphur with the rubber was dissolved by the process was the occasion of the granting of the patent, and while this claim certainly was not true in the scope in which it was made, yet the evidence is not sufficient to justify a finding that Marks had such knowledge upon the subject that his representation was a deliberately false one, and therefore there will be no finding that the patent is void for fraud practiced in obtaining it.

Passing to a consideration of the validity of the patent in view of the state of the prior art, and comparing the claim allowed in the patent with claim 2 in the original application, as supplemented by claim 3 in the original application, both of which were rejected, and the rejection acquiesced in by the applicant, it seems very clear what the department conceived to be an invention or discovery by Marks consisted in the exact temperature to which the dilute alkaline solution must be raised in the process, and the time during which that temperature must be maintained to accomplish the desired result, and, when the extent to which the art had advanced at the time the application was made is considered, it must be concluded that the range of equivalents allowed must be an extremely narrow one, for it is just as essential that "the public should be protected against unwarranted monopoly, as much as the inventor" should be protected "against piracy." Union Match Co. v. Diamond Match Co., 162 Fed. 148, 89 C. C. A. 172; Goodyear Dental Vulcanite Co. v. Davis, 102 U. S. 222, 26 L. Ed. 149.

The patented process consists in submerging finely ground rubber waste in a dilute alkaline solution in a sealed vessel, and in heating the contents of the vessel to a temperature of 344° Fahrenheit, more or less, and in maintaining said temperature for 20 hours, more or less, substantially as specified.

The question for decision is: Was this process so new and novel as to constitute that invention and discovery for which it is the policy of the law to grant a monopoly.

The record shows that the recovery of rubber from rubber waste in a form such that it might be used again has been a result much

sought after by inventors ever since vulcanization of rubber brought it into general use.

The patents relating to the subject range in dates from the Beer United States patent, No. 12,983, dated May 29, 1855, and the English patent to Christopher & Gidley No. 1,461, dated 1853, to the date of the patent in suit. The advent of the automobile and the extensive use of rubber tires, of course, greatly increased this interest and activity in later years.

That the use of "a dilute alkaline solution" to "devulcanize" rubber, meaning a more or less perfect restoration of vulcanized rubber to a state in which it might be used as crude rubber was used, was well and commonly known, is clear from the following United States patents:

Hall,	No.	19,172—1858.
Hayward,	"	40,407—1863.
Mitchell,	"	249,970—1881.
Chadwick,	"	288,013—1883.
Bourn,	"	292,891—1884.
Mitchell,	"	300,720—1884.
"	"	395,987—1889.
"	"	419,697—1890.

These British patents prove the same thing:

Christopher & Gidley,	No.	1,461—1853.
Heinzerling & Liepmann,	"	2,495—1875.
Gomess,	"	10,528—1891.
Anderson,	"	18,008—1898.

To this proof that the subject was common knowledge must be added the publication by Hoffer in 1883, referred to by the department, and especially to chapter 29, entitled "Waste and Its Utilization," which appears in the record.

It is equally clear that it was well known before the Marks application that better results were obtained when the ground rubber and alkaline solution were treated by exposure to a high degree of heat in a closed vessel, as is shown in the following patents:

U. S.	Patent	No. 395,987	to	Mitchell	dated 1889.
"	"	" 419,697	"	"	" 1890.
"	"	" 308,189	"	Montgomery	" 1884.

The Mitchell patent, No. 395,987, comes very close to being, if indeed it is not, a clear anticipation of the process of the Marks patent, claiming as it does in the first claim of the patent:

"An improvement in reclaiming rubber from waste, consisting in heating the waste immersed in the reclaiming solution in a closed vessel under pressure above the ordinary boiling point, of such solution substantially as described."

And in the second claim, describing the use of a closed vessel under pressure to about 340° Fahrenheit, substantially as described. And in the third claim describing the processes patented as "consisting in treating the waste with a reclaiming solution, so as to corrode the

fibrous matter, and then washing out the products of corrosion, and steaming the rubber at a high temperature and pressure" substantially as described. When, turning from these claims, we find the description to include subjecting the waste to the action of reclaiming reagents, such as a solution of caustic alkalies or acids, which act upon the fibrous matters, and in some cases also upon the mineral compounds, so as to form products which can be washed out, leaving the rubber in a more or less pure condition, it becomes difficult to see what advance the Marks patent makes upon this Mitchell patent. Precisely the treatment of the Marks patent is suggested, even to the degree of heat adopted.

The reading of these patents referred to, and assuming, as we must assume, that Marks had knowledge of them when he filed his application, makes it convincingly clear to this court that there is no such advance upon the state of the prior art shown in the Marks patent as rises to the dignity of invention, and the patent will therefore be decreed to be void for want of novelty and invention.

While it is not necessary for the court to go further in the discussion of this case, yet I think it proper to say that, if the patent had been found to be a valid one in the opinion of this court, it would have been limited to the precise terms expressed in the one claim allowed by the Patent Office, and since the process used by the defendant is so distinctly different from that of the patent in suit, it being neither a chemical nor mechanical equivalent of it, and especially since the record shows that the acid treatment was in use long before the Marks patent was granted, and also shows that the plaintiff claims the superiority of the Marks process over the acid treatment to be that it results in a very superior product, I am of opinion that there is no infringement by the defendant. I cannot help noting, also, that the claim allowed in the Marks patent is extremely indefinite, consisting as it does in heating the contents of the sealed vessel to a temperature of 344° Fahrenheit "more or less," and in maintaining said temperature for 20 hours, "more or less." Such a claim really leaves the whole subject in such an indefinite state as to leave the user to the necessity of experimenting to find out how the process must be used in order to realize the claimed advantage of it.

The testimony of Expert Fox shows that after the filing of the claim allowed, which purports to state the temperature ("more or less") to which the materials must be raised and the time ("more or less") for which they must be maintained at that temperature, he (Fox) was engaged under the direction of the patentee in experimenting for the purpose of determining the amount of the caustic solution and the degree of heat which could be used to best advantage in the process. This also suggests that the user of the process is left by the patent to experiment for the purpose of obtaining the results claimed for it, and this does not fulfill the statutory requirement (Rev. St. § 4888 [Comp. St. 1913, § 9432]) of definiteness in valid patents, as was said by the Circuit Court of Appeals for this Circuit in Overweight Counterbalance Co. v. Vogt Machine Co., 102 Fed. 961, 43 C. C. A. 80, citing as authority for this conclusion Howard v. Stove Works, 150 U. S. 167,

14 Sup. Ct. 68, 37 L. Ed. 1039, and In re Incandescent Lamp Patent, 159 U. S. 465, 16 Sup. Ct. 75, 40 L. Ed. 221.

A decree will be entered in conformity to this opinion, finding the patent in suit void for want of novelty and invention.

NATIONAL CHEMICAL CO. v. LLEWELLYN & DOYLE.

(District Court, N. D. New York. November 17, 1915.)

PATENTS ⚷310—SUIT FOR INFRINGEMENT—PLEADING.

Allegations in a bill for infringement of a patent *held* not subject to a motion to strike out as impertinent and immaterial.

[Ed. Note.—For other cases, see Patents, Cent. Dig. §§ 507-540; Dec. Dig. ⚷310.]

In Equity. Suit by the National Chemical Company against Llewellyn & Doyle. On motion to strike certain allegations from bill. Denied.

H. P. Denison and Eugene A. Thompson, both of Syracuse, N. Y., for complainant.

Parsons & Bodell, of Syracuse, N. Y., for defendant.

RAY, District Judge. Complainant sues in equity to restrain and enjoin alleged infringement by the defendants of United States letters patent No. 1,138,686, for collar ironing machine, and for an accounting and triple damages.

The paragraphs which defendants on this motion seek to have expurgated from the bill of complaint, paragraphs 6 to 11, inclusive, allege in substance that defendants at all the times mentioned in the bill of complaint were running a machine shop in which they did repair and construction work for others, and not for themselves, and so assumed and undertook confidential relations with their customers; that, knowing this and relying thereon, and that all secrets and information would be confidential, the plaintiff contracted with them to manufacture certain collar machines at an agreed price; also that defendants agreed as a part of such contract of employment to assist plaintiff in perfecting its machines, and also in devising other and new machines, and that all inventions and improvements made during the existence of the contract should belong to the complainant, be disclosed to the officers of the complainant, and that on request they would also execute application or applications for letters patent thereon and assign same to the complainant; also that the contractual relations thus established commenced in the fall of 1911, and continued until in the spring of 1913; also that the defendants reconstructed for the complainant a large number of collar machines, which had been made by others, but thereafter constructed over 650 new collar machines for the complainant, and complainant paid for such work some $26,880; also that, when completed and crated, such machines were forwarded by defendants to the purchasers, the customers of the

plaintiff, and that by these means and contractual relations defendants became familiar with the business and customers of complainant, to whom such complainant was selling and delivering the machines made in accordance with the patent in suit, and alleged to have been infringed by defendants; also that, possessing this knowledge and availing themselves thereof, the defendants during the continuance of such contractual relations began to produce and put on the market and sell collar machines similar to and embodying the improvements set forth in complainant's letters patent sued upon, all without the consent and allowance of the complainant. The complainant seeks to recover and demand treble damages and also an injunction.

As bearing on these questions, and, it may be, on the question of infringement, I think these allegations should stand. When the answer is filed, and on the trial, it can be determined whether proof of these allegations is pertinent and material.

Motion to strike out denied.

McCARTHY v. L. ADLER BROS. & CO.

(District Court, S. D. New York. November 9, 1915.)

COPYRIGHTS ⟹67—SUIT FOR INFRINGEMENT—EQUITIES OF PARTIES.

Defendant company, a manufacturer of clothing, desiring to issue a booklet advertising its products, through one of its members submitted to two artists, one of whom was complainant, the same general design for a picture to be placed on the cover, leaving the details to the artists. Complainant copyrighted his sketch, which was not accepted. The one accepted and used was necessarily similar in general design, but different in detail. *Held:* (1) That defendant's picture did not infringe the copyright; and (2) that under the facts a court of equity would not subject defendant to the severe penalties of the copyright law for the use for commercial purposes of a picture of which it was to large extent the originator.

[Ed. Note.—For other cases, see Copyrights, Cent. Dig. § 64; Dec. Dig. ⟹67.]

In Equity. Suit by Clarence Joseph McCarthy against L. Adler Bros. & Co. Decree for defendant.

Lucius E. Varney, of New York City, for complainant.
Julius Henry Cohen, of New York City, for defendant.

MAYER, District Judge. The facts in this case are comparatively simple, and, as the record stands, there seems to be no conflict of testimony on any material point. The plaintiff, a young artist, obtained an interview with Mr. Adler, a member of the defendant company. Mr. Adler was contemplating putting out a booklet, advertising the clothing manufactured by defendant. Mr. Adler seems to have had his own ideas, in a general way, as to an artistic cover for this booklet. An agreeable presentation to the public is important in a booklet advertising merchandise of this kind. In brief, Mr. Adler's idea was

the representation of a stage, on which a "show" was about to be opened or commenced. That idea is illustrated by the introduction to the booklet, which is:

"All the world's a stage. Play your part in the great drama of life in correct costume."

Mr. Adler gave to Mr. McCarthy every essential feature of the proposed artistic cover, and not only gave to him the broad general thought of a stage on which a performance or show was about to be opened, but also gave to him certain important details. Those details included, among other things, an orchestra in the lower left-hand corner, the representation of a shield, a curtain, and the label or trade-mark of the defendant company. Mr. Adler also gave to Mr. McCarthy the choice of deciding whether there should be a man in formal evening dress or a Pierrot on the stage; the obvious purpose of this figure being to announce or introduce to an imaginary audience the performance which would take place upon the stage, and presumably would begin as soon as the curtain was raised.

There had already been published, among other things, two covers of the American Magazine, one for the month of January, 1914, and the other for the month of August, 1914; each of these covers being the work of Louis Fancher, concededly a man of high standing in this branch of artistic effort. In the January, 1914, cover was the representation of a spotlight and a part of an orchestra. The part of the orchestra had three figures, one of whom was the leader of the orchestra. In the August, 1914, cover there was the representation of a stage, with the curtain slightly opened, and the announcer a Pierrot.

After Mr. McCarthy had made his drawing in accordance with these general instructions, this drawing was submitted to Mr. Adler, and for some reason or other ultimately was not satisfactory to Mr. Adler. Some dispute between the plaintiff and the defendant company arose as to the compensation which was to be accorded to the plaintiff, there being some difference of opinion about the agreement; and from his point of view, in order to protect himself, the plaintiff caused his production to be copyrighted.

The defendant submitted by correspondence to the Mr. Fancher above referred to instructions as to the same subject-matter. These instructions contained the same limitations as were given to Mr. McCarthy, in respect of the space to be occupied, a necessary limitation in view of the size of the booklet; and these instructions likewise required, as would be entirely natural, that the label or trade-mark of the defendant concern should appear upon the picture to be drawn by Fancher, and in respect of details Fancher was permitted to exercise his own judgment.

In view of the previous work of Fancher, it was quite natural that he should finally conclude that a Pierrot would be a more attractive figure than a man in evening clothes. Fancher treated the orchestra in an entirely different way, not merely as to perspective, but he introduced a leader, which to my mind, from a layman's standpoint, was one of the elements that made his representation more attractive than that of McCarthy, and the leader was obviously his own idea, as ap-

pears from the fact that he used a leader of the orchestra in the January American Magazine.

Of necessity, with the general instructions that were given, and the liberty to both of the artists in respect of detail, there was not very much room for general variation. The scheme was the same scheme in both instances, and did not originate with either of the artists, but originated in the mind of this business man, who had his own ideas as to what would be effective for advertising purposes. The carrying out of the detail was a matter that one would expect would be left to the artist, and was left to the artist. From my point of view the difference in the detail is substantial; but, even if it had been closer, I think the result would be the same, because of the limited character, both in space and in theme, of the subject-matter to be treated.

If it be assumed, for the purpose of the argument, that Mr. McCarthy's composition was copyrightable, then by the same token it must be assumed that Mr. Fancher"s composition was an independent effort. Each of these compositions had a common source, and it is the settled law in copyright that, where two men work independently from a common source and produce different results, neither infringes upon the other.

I have had the advantage of seeing the witnesses in this case, and therefore have exercised my judgment as to the truth of their statements upon the stand, and I am entirely satisfied, from the standing of Mr. Fancher in the art, from the prior work of his own which has been introduced in evidence, and from the appearance that he made upon the stand, that he is stating the absolute truth when he says that his production was an independent effort, from the same general instructions as those which were given to Mr. McCarthy. I think that in no manner did he copy Mr. McCarthy, nor do I think that he intended to copy Mr. McCarthy. And, therefore, if it be conceded, solely for the purpose of argument, that Mr. Carthy's composition was copyrightable, I find no infringement.

But, further than that, I am impressed by the suggestion of counsel for the defendant that the case may go off on another point. The suit is in equity, and I should regard it as a very dangerous doctrine to hold, in the circumstances, that a defendant might be gravely penalized where, as a business man, desirous of producing a useful cover for a commercial purpose, he lays the same general proposition before two artists, and then, when he accepts what seems to him to be the better execution of his idea, he should be subjected to the serious penalties which Congress has imposed in the very laudable desire to protect authors, musicians, artists, and other men of the professions whose work is copyrightable. It is conceded in the case that, had Mr. Carthy received the sum of $150, which he said was the agreed price, which on this record is not controverted, the work or composition would have belonged to the defendant company. In equity, and from the ordinary everyday standpoint of what is fair and right, that would be the compensation to which he is entitled, and in view of the fact that the same composition was not used, but one which in my opinion is so substantially different as not to infringe, it would be flying, in

my judgment, in the face of equity, to allow a recovery under the copyright law under the circumstances.

For the reasons I have briefly outlined, I dismiss the bill—first, because there is no infringement; and, second, for want of equity.

THE ALCAZAR.

(District Court, E. D. North Carolina. October 11, 1915.)

No. 126

1. SALVAGE ⟹17—NATURE OF SERVICE—SUCCESS OF EFFORTS.

A tug, at the request of a steamship stranded on a shoal off the North Carolina coast, stood by for several hours in a heavy sea, taking off the crew because, after the steamer had been forced off the shoal by the wind and waves, she had a 45 degree list, and was unmanageable, which in the opinion of both officers and crew rendered it very dangerous to stay on board. Early the next morning the tug undertook to tow the steamer to port, but owing to the heavy wind and sea was unable to make much headway, and about noon cut the hawser and took the crew to Wilmington, and after obtaining coal and supplies went back to look for her, but she had been taken in charge by another vessel, and the tug did not find her. *Held* that, while the service did not result in saving the steamer, she was in undoubted peril, and the service left her in less dangerous case, and probably, although not certainly, contributed to her safety and was entitled to compensation as a salvage service.

[Ed. Note.—For other cases, see Salvage, Cent. Dig. § 30; Dec. Dig. ⟹17.]

2. SALVAGE ⟹21—NATURE AND SUCCESS OF SERVICE—SALVING OF QUASI DERELICT.

The passenger steamer Dorchester, on her trip from Savannah to Philadelphia, in December, off the North Carolina coast, at night, and in rough weather, came upon the Canadian steamship Alcazar, with no one on board, without steam or lights, and having a list of 40 to 45 degrees. After 45 hours' work with the assistance of a sister vessel, which came along, and later of a government vessel, which she called by wireless, the Dorchester got the Alcazar anchored in Lookout Bight, which was the nearest place of refuge. In the course of operations, however, the Alcazar was anchored, and owing to unfamiliarity with the English anchor hoisting mechanism, both bow anchors were unintentionally dropped, and when she was again moved it became necessary to slip both anchors, so that when she reached the Bight there was only a kedge anchor, the flukes of which were rusted or "frozen" and failed to open when the anchor was dropped. In stormy weather following the vessel dragged this anchor and stranded on a shoal in the Bight. The Dorchester had no knowledge of the ownership of the Alcazar, and left men on board with instructions to allow no one to come on board without showing authority. The next day a representative of the owner, having learned her position, came out to her, but was refused permission to come on board, and during the ensuing delay a severe storm drove the vessel further on the shoal. Claimant defended against the suit for salvage on the ground that the service was negligently performed in losing the anchors and failing to inspect and put in proper condition the kedge anchor, and that the salvors wrongfully withheld possession. *Held*, that the Dorchester was justified in regarding and treating the Alcazar as a derelict, although she was not strictly such, her crew having abandoned her only temporarily because of her dangerous condition, that

---

⟹For other cases see same topic & KEY-NUMBER in all Key-Numbered Digests & Indexes

the salvage service rendered was meritorious, and that the matters urged in defense went only to the question of the amount of compensation to be awarded.

[Ed. Note.—For other cases, see Salvage, Cent. Dig. §§ 48–51; Dec. Dig. ⟹21.]

3. SALVAGE ⟹4—"DERELICT"—WHAT CONSTITUTES—"QUASI DERELICT."

A vessel found at sea in a situation of peril, with no one aboard of her, is prima facie a "derelict"; but when the crew have left her temporarily, with the intention of returning to resume possession, she is not technically a derelict, but is what may be termed a "quasi derelict."

[Ed. Note.—For other cases, see Salvage, Cent. Dig. §§ 7–11; Dec. Dig. ⟹4.

For other definitions, see Words and Phrases, First and Second Series, Derelict.]

4. SALVAGE ⟹41—DERELICT—SURRENDER OF POSSESSION.

The lien of the salvor of a derelict is not lost by surrender of possession, and unless there is a probability that before process can issue and be served the property will be removed beyond the jurisdiction, or to a place rendering the enforcement of the lien more difficult or expensive, possession should be surrendered to the owner on demand, at least to the extent of permitting him to come on the vessel and aid in taking care of her.

[Ed. Note.—For other cases, see Salvage, Cent. Dig. § 106; Dec. Dig. ⟹41.]

5. SALVAGE ⟹28—AMOUNT OF COMPENSATION—QUASI DERELICT.

The amount of compensation to which salvors of a steamship, found abandoned at sea and which was a quasi derelict, were entitled, considered, and determined on the evidence.

[Ed. Note.—For other cases, see Salvage, Cent. Dig. §§ 69, 71; Dec. Dig. ⟹28.

Salvage awards in federal courts, see note to The Lamington, 30 C. C. A. 280.]

In Admiralty. Suits for salvage by the Merchants' & Miners' Transportation Company, and by Rufus S. Salas and Thomas B. Starratt, against the steamship Alcazar; the Inter-American Steamship Company, Limited, claimant. Decrees for libelants.

Libels were filed by the Merchants' & Miners' Transportation Company, owners of the Dorchester and the Merrimac, and Rufus S. Salas, owner of the steam tug Columbia, and Thos. B. Starratt, master, against the steamship Alcazar, for salvage service. The libels were consolidated and heard together. Several members of the crew of the Alcazar filed intervening libels.

Daniel H. Hayne, of Baltimore, Md., and J. O. Carr, of Wilmington, N. C., for libelants.

Harrington, Bigham & Englar, of New York City, and Chas. L. Abernethy, of Newbern, N. C., for claimants.

Lawton & Cunningham, of Savannah, Ga., for The Columbia.

CONNOR, District Judge. The Alcazar, a tramp steamer, owned by claimant, Inter-American Steamship Company, Limited, a Canadian corporation, leaving Port-au-Paix, Haiti, with a cargo of logwood, or dyewood, December 18, 1912, destined for Chester, Pa., went on a

shoal, on the North Carolina coast, "just inside the Knuckle Buoy, between Cape Lookout and Cape Lookout Lightship," at about 1:55 p. m., December 23, 1912. Her dimensions are: Length, 322 feet; beam, 41.5 feet; depth, 20.7 feet; register, 3,129 tons gross, 2,020 tons net. Her draft, loaded, 18 feet 2 inches. Her crew consisted of captain and 25 men. Cargo, 2,800 tons. Built 1893.

The Columbia, owned by libelant Rufus S. Salas, left Savannah, Ga., December 21, 1912, with a tow, on a voyage to Norfolk, Va. She dropped her tow off Charleston, S. C. Her dimensions are: Length, 101 feet; beam, 23 feet; draft, 14 feet; steel, fore and aft compound engine 500 horse power; built 1904. On December 23, 1912, she was off Cape Lookout. Crew, captain and nine men. About one-half hour after the Alcazar went on the shoal, she called the Columbia to stand by her. Garrod, master of the Alcazar, says that the Columbia came as near to him as she could get; tried to shout through the megaphone, but master could not hear—wind was blowing. Starratt, master of the Columbia, says that the Alcazar tried to hail, but could not understand; wind was blowing too hard; sent up signals; wished to communicate; signaled to send boat; sounding showed that where he was had 20 feet water; his tug was drawing 14 feet; went as near as he thought safe; thought that he was putting his boat in danger; sea was heavy, choppy, breaking from northeast; boat came from the Alcazar with captain and five sailors; came aboard the tug; thought it best to stand by and get hold as soon as we could; if she floated, to take a line; and, if she was damaged in any way, to tow her to the nearest port. Garrod says:

"I asked him to stand by, and he said he would. I was preparing to come aboard [the Alcazar] again, when the lifeboat was smashed. It was our own lifeboat."

The Columbia "stood by all the time and we saw the steamer come off the shoal." The Alcazar, without assistance, came off the shoal about 6 o'clock, the wind was about northeast and aided her in getting off. After getting off the shoal, the Alcazar began to list—between 40 and 45 degrees, port. The crew on board blew whistles and fired rockets—distress signals. The master of the Alcazar says:

"I got as close to the ship as I could with the tug, and the men were all shouting; they sent rockets up. We got as close as we could and took them off, and then I asked the tug to stand by until daylight to see what she was going to be like."

The other members of the crew of the Alcazar reached the Columbia at about 7 o'clock. Garrod says that, at the time he left the Alcazar, it was not his intention to abandon the ship; "only to come off for fear she would turn over; waiting to see what she would be like. It was coming on dark at that time; it was dangerous enough at that time of night." All of the crew came to the tug on the same boat, making three trips. On cross-examination, he says that the crew left "because she lay over that far that men had to leave." Did not consider it safe; left in a hurry; afraid that she would turn turtle. Sea was increasing all of the time. He was asked whether any one, who would stay on a vessel of that character, would be taking his life in his hands, to which he answered:

"Yes; he would be thinking about committing suicide; it would be a very hazardous thing to do. Some of the crew said that they did not think they would return; came off to save our lives; expected to capsize at any minute; grabbed our clothes best we could; all glad to get away; did not know what they intended to do."

There is much contradictory evidence respecting the articles brought to the Columbia by the crew of the Alcazar, which will be hereafter noted. The sea was quite heavy from the northeast at 7 o'clock; moderated to calm later on. The next morning, at about 3:30 o'clock, six of the crew of the Alcazar, under the direction of the captain of the Columbia, took a line to the Alcazar, for which he paid each of them $5, attached it to a hawser furnished by the Columbia, and began towing the Alcazar. After coming off the shoal, she had drifted with the current to the westward, and with the wind to the southeast. Shortly after the tow line was attached to her, the wind began to blow from the southwest. Garrod says:

"They had hold of the ship, towing her against the wind, but the wind was too strong. We made no headway; hardly any headway at all. This continued until about 7:30 a. m., making two or three miles. The wind then blew to the southwest. The tug changed her course westward, to keep from being blown to sea; held this course until 12:30 p. m. There was then a strong gale; held this westward course to keep from being blown to sea, to try to keep as close to the shore as possible; then cut the hawser. She was then approximately 8 or 10 miles southward of the lightship; well and clear of Cape Lookout shoals; wind blowing approximately west-northwest; cut the hawser, because weather conditions were such as were unsafe for the tug or crew, or the crew of the Alcazar, to remain in that position any longer. The sea was breaking over the tug."

The master of the Alcazar says that the reason given by the master of the Columbia for cutting the hawser and leaving the ship was that she "wanted more coal"; that she did not have sufficient coal to continue her operations then. The master of the Columbia denies this; says that he had, when he left Savannah, 110 tons, and when he left the Alcazar he had 55 or 60 tons, enough to last three days; that he may have stated that he would take coal supplies when he reached Wilmington. He assigns as his reason for not continuing the work that, with the coming of 26 additional men on board from the Alcazar, he did not have a sufficient supply of provisions. He was nearer to Beaufort than Wilmington, but knew nothing of the conditions at Beaufort—had no chart for that harbor. It was his purpose to go to Wilmington, take on stores and coal, and return to look for the Alcazar. He arrived at Wilmington about noon of December 25th. While going up the river, he met the revenue cutter Seminole; shouted to her captain, asking if he was going to the Alcazar; said he was going to search for her. The captain of the Columbia landed the crew of the Alcazar at Wilmington, took on coal and stores, and that evening left for the purpose of looking for the Alcazar; searched for her from 6 in the morning until 4 o'clock in the afternoon, at the place where he supposed she would be. Not finding her, he continued his trip to Norfolk. He says that he told the men on the Seminole, as he passed, that he was going back to look for the Alcazar. He did not know, positively, that the Seminole was going out to look for her, but supposed so; heard, when he got to Wilming-

ton, that she had gone out to look for a steamer; knew that it was the Alcazar. He was engaged in standing by the Alcazar from 2 o'clock p. m., December 23d, until 7:30 a. m., December 24th; in towing her from that time until 12:30 p. m. For the purpose of taking her crew into Wilmington, and taking on a supply of provisions and coal and searching for the steamer, the tug was detained until 4 o'clock p. m. of December 26th. She lost a hawser, worth $391.23; consumed 50¾ tons of steam coal, $233.38; furnished provisions, $86.02; paid crew of Alcazar to take line to her, $25; charges for three days, $300; aggregating $1,033.63.

H. S. Chase, master of the Dorchester, owned by the Merchants' & Miners' Transportation Company, on her trip from Savannah to Philadelphia, says that at 9:25 p. m., December 24, 1912, his attention was called to "something on the starboard bow." He slowed the ship down, ported the wheel, and swung around on the starboard side of the object, and with glass and searchlight made it out to be a steamer, with a deck load. He thus describes the situation and the course pursued by him:

"She was laying over very dangerously. I came on by the ship until I circled around and turned the light on the name, and saw she was the Alcazar, and stopped the ship close to the Alcazar and looked her over. I was possibly 25 yards [away from her]. It was rough, and both ships were rolling badly. I told the mate it was a prize there, and it looked to be in pretty bad shape; * * * and I said, 'I would like for you to go aboard of her, but I would not order you to go aboard, but would be glad if you would go.' He took a volunteer crew of five men in a small boat, and I got him clear of the ship, and he rowed to the Alcazar. The men were very scared, and I heard them talking and shouting. They were gone possibly half an hour, and came back. The mate came on deck and said he could do nothing with those men, and the men said themselves they would not risk their lives to go on that vessel. The mate said, if he could get a volunteer crew, he would try again."

The men were called up; none of the sailors would go; the pantryman, the second cook, and two waiters and several others offered to go. They went with the mate. The towing hawser of the Dorchester, 90 fathoms, 8-inch manilla, was gotten out.

J. G. Beranger, the mate, who went with the crew, after describing the first effort to get on the Alcazar, and the refusal of the men to do so, and their return to the ship, describes the second effort, saying:

"She was surfing 12 or 15 feet high. * * * We got started, and had about the same difficulty as on our previous trip, getting away from the ship's side. The little boat was tossing very heavily, and there was danger of falling overboard, and we had about as much trouble getting alongside as before. However, I got the bow of the boat about 25 feet from the stern, when we boarded her, and the boatswain was the first man to get aboard, and he grabbed the rail, and went aboard as she came down, and fell inside."

He describes how each of his crew, by the same method, got on the vessel. He says that he went on and placed the quartermaster in charge, etc. He describes the difficulty which they had in securing a position on the vessel and putting on the hawser. They finally succeeded, and called to Capt. Chase to go ahead. Chase says:

"With great difficulty we gave a line to the Alcazar, and he got one or two more men, and they got up on the bow and hauled the heaving line aboard, and I got my hawser through the starboard bow chock, and he hauled it in,

possibly 10 fathoms of it, and made it fast, and said he had her all right. Owing to the sea, which was heavy, and the vessel acting badly, my own vessel acted very badly, and the Alcazar going up and down 10 or 15 feet, I did not dare start with my ship towing the Alcazar, with any men on her, and I called them back. They came back, and we secured our boat, and started ahead very slowly, and before going ahead I told the chief officer that we were up against a dangerous proposition, and I wanted him to instruct his men not to make any mistakes, because one single mistake with the engine meant the destruction of both vessels. Or course, handling a ship like that at night is an ugly business, especially backing and filling. The men worked very nicely then. I made the hawser fast, and the Dorchester started to towing the Alcazar. We did not do much on it, because she took charge of us, and not us of her. She persisted in going around in a circle, no matter what I did with the Dorchester's engine or wheel. Instead of going towards the land, as I wanted to go, she persisted in going the other way. For half or three quarters of an hour, the Alcazar was sheering, sometimes almost abreast of the ship, and the hawser coming up in the sea, and after an extraordinary sheer the hawser parted, with 40 fathoms from the Alcazar and about 30 fathoms from us. While we were doing this, the Merrimac, one of our own ships, came up, winked his eye at us, and, as I had no other hawser then for that purpose, I wirelessed the Merrimac to come back, and he came back about half past 2, and we held a consultation, and I told the captain of the Merrimac that we had an abandoned steamer here, and did he have any towing hawser, and he said he had about 120 fathoms of 10-inch manilla."

They decided to do no more that night, to wait for the sea to go down.

"The Alcazar was free, and I took the bearing of the ship. She was 7 miles southwest and ½ west from Lookout Lightship, and I watched her from 2 o'clock."

He indicated on the chart her location. She moved about half a mile, drifted an hour in a northeast direction.

"When morning came we discovered what the trouble was with the Alcazar, in regard to swinging us around in that circle. We found she was about 2½ feet down by the head, and her rudder was jammed hard over port."

He gave directions to the mate and his crew, who went to the Alcazar, in regard to straightening out the rudder. This was done by going below to examine the gear around the rudder. He says:

"I would not have gone below for the whole vessel, under those circumstances, because, if she capsized, he would never have gotten out, and nobody knew it was not going to capsize."

The captain of the Merrimac sent a boat with a second officer and five men, and they put one more man on the Alcazar, and with this boat he sent a small 2½-inch manilla rope, and on this he bent his 10-inch hawser and got it fastened in the same position it had been fastened on the night previous. After getting the hawser fastened, as described by Chase, he—

"headed north-northeast, which was about the direction we had to go to clear the shoal, and, after towing possibly half an hour or more, the Alcazar doing the same trick with him as she did with me, sheering first one way and then another, then the line went in the air and parted about two fathoms of the bridle. There was the Alcazar free again, with this 10-inch hawser hanging down from her bow."

Chase describes his efforts to pick up the hawser, saying:

"I had to back my ship towards the Alcazar; my ship was rolling one way and she was rolling the other. I don't know whether any of these gentlemen have ever been masters of vessels; but if you have a vessel worth $300,000 and about 60 or 70 people, all under you, on that boat, and if you succeed in a thing like this, you get greatly praised, but you know what you get if you fail. * * * We were gradually drawing up around the end of the shoal, and I could see the top of the Life Saving Station. I was trying to get her into Lookout Bight, if I could; but about 3 o'clock the new hawser, which belonged to the Merrimac, parted, and it left me about 60 fathoms out of the 120 which we had in the morning. My crew was fagged out, they had been up since the night before, and with part of the Alcazar it didn't look very good about getting her in, and the Merrimac came there and said: 'If you will run a line, I will tow her.' It was getting dark then, and we had to do what we had to do, quick."

While he was engaged in this effort, Yeomans, of the Life Saving Service, came to him in a gasoline boat. He undertook to pilot the Dorchester, having the Alcazar in tow, and finally got her in the Bight within about 4½ miles of the light, and he said that would be all right. When they got in the position Mr. Yeomans said was all right, told him to let go the anchor and hawsers. In letting go the anchor, both sides were unlocked, instead of one; was not familiar with the English anchor; "so there she was with two anchors."

Chase, in the meantime, had sent a wireless to the captain of the Seminole, revenue cutter, at Wilmington. He brought the Dorchester nearer to the Alcazar, to carry the men from the Dorchester, who had been on her during the time, something to eat. While on the Alcazar, the Seminole came up and steamed to the Dorchester. After looking after his men on the Alcazar, he went to the Seminole and there met Lieut. Covell, the officer in charge, told him who he was, and that he wanted him to take the Alcazar into Lookout Bight. After discussing the weather, he proposed to start early in the morning. Chase then went to Beaufort for the purpose of communicating with his people, spent the night there, December 25th, returned next morning. The Seminole, at Wilmington, received a wireless from the Dorchester on the morning of December 25th, stating that she was standing by the Alcazar, 7 miles southwest of Lookout Light Vessel. Covell, her first lieutenant, in command, started at once to give assistance. At 2 p. m. of the same day he received a message from the steamer Merrimac, stating that the Dorchester and she were accompanying the Alcazar toward Lookout Bight, the weather was good, very little wind, and smooth sea. Lieut. Covell says that, when he reached the Dorchester, Capt. Chase was on the Alcazar. He soon came alongside the Seminole in the Life Saving boat, and said that the Alcazar had been anchored by him in her present position and wished him to tow her into Lookout Bight. He went on the Alcazar, taking his carpenter with him; looked over the situation, and found both anchors down, and, in order to take her into the Bight, they slipped both chains. Before doing so, talked with the five men on board, the prize crew from the Dorchester; no protest was made; had no means of getting the anchors up; started with her at 3:45 a. m. on December 26th; anchored her in the Bight with a kedge

anchor, which was on her forward bow. There was one small kedge on the starboard bow; used the heavier kedge. While they were trying to get the anchor off, she drifted in on Cat Fish Point. They pulled her off; stood by her all that night, and left the morning of the 27th December; left several members of the Dorchester's crew on her. There was no safer anchorage in the Bight. One anchor would have held her under those conditions. He says:

"It is the safest place in that vicinity, and is considered a safe harbor in everything but a southwestern, which blows into the Bight. In a southwest gale, there is danger of her dragging ashore."

He says that while he was towing her into the Bight the Alcazar sheered—on account of her list and the fact that her steering apparatus was not used—she sheered all she could.

Returning to Capt. Chase's testimony, he says that the Merrimac left him at 6:10 p. m. December 25th; that the prize crew, consisting of four men from the Dorchester, went upon the Alcazar, and—

"I gave them instruction under no circumstances to allow any one aboard that ship, except the life saving crew, and the cutter people, until some one came from our company down there and he knew them, and then he could turn the vessel over to them. Then my ship was anchored about two miles outside of this Bight. I proceeded to Philadelphia short of two licensed men and two other men."

He took from the Alcazar mail packages, which were delivered to the post office, etc. He says:

"From the first time I was notified at 9:25, December 24, 1912, and by the time I got my ship back to the same place she was before, to my original course on my way to Philadelphia, it was 6 o'clock on December 26th—44½ or 45 hours."

It was very cold. The foregoing constitutes the outlines of the transaction, up to the time the Dorchester left the Alcazar, as narrated by the principal actors. Other persons on the vessels engaged were examined at much length. The other incidents occurring prior to December 27, 1912, in regard to which controversies have arisen, will be noticed in the discussion of these questions.

In respect to the events subsequent to the morning of December 27th, giving rise to serious differences between the parties and counsel, dates are of special interest. The libelants claim that when anchored in Lookout Bight, on the afternoon of December 26, 1912, the vessel was in the safest available place, and that they had performed a complete salvage service. This is seriously contested by the claimant. On December 26th, the Merchants' & Miners' Transportation Company of Baltimore, having been notified by Chase of the Dorchester's situation with reference to the Alcazar, wired Marwood & Co., Liverpool, England, stating that their steamer had—

"picked up abandoned steamer Alcazar off Carolina coast. Advise us name owner's representatives in America."

On December 27th, at 9:43 a. m,. they received answer:

"Owners Alcazar. Late Eva—Inter-American Co., Toronto, Canada."

Mr. Hassler, the treasurer of claimant company, residing in New York, on December 25th, learned through the shipping news in the New York Herald that the Alcazar was in distress somewhere below Cape Lookout Lighthouse. He immediately communicated with the Treasury Department at Washington, and learned, through the Department, that the Seminole was in communication with, or had knowledge of, the whereabouts of the vessel. Together with his marine superintendent, Mr. Davies, he came at once to Beaufort, N. C., reaching there December 27th, and endeavored, without success, to get some one to take him to Cape Lookout. He learned, through Mr. Sprunt, at Wilmington, that the captain, second officer, engineers, and two or three of the crew of the Alcazar, had left there for Beaufort. They arrived that afternoon. He secured, on December 28th, a boat, and, with Mr. Davies and the members of the crew, reached the Alcazar during that morning. He found Chamberlain and the other members of the prize crew on board. He describes the appearance of Chamberlain; says that he had a gun laying on the rail. He tried to talk with him and explain that he was the owner of the vessel and wished to go on her, but he would not allow him to go up; told him that he had some telegrams to show that he was the owner, said that he could send them up in a canvas bucket; that Chamberlain was very rude to him; told him in a very impolite way that there was no use in his staying there; that Capt. Chase was his captain; had his hand on his gun. In regard to this conversation. Chamberlain says that he was left in charge of the ship, with instructions not to permit any one to come aboard unless they showed that they were authorized to do so; that some men, on Saturday morning, came on a small fishing boat; one of them wanted to come on, and said that he had a telegram showing his authority; that he told him to send it up in the canvas bucket, which he refused to do, and left.

That Mr. Hassler asked permission to go on the vessel, and that Mr. Chamberlain refused him, is not open to debate. A correspondence over the phone and by wire was conducted between counsel in Baltimore and New York, during the 27th and 28th of December, trying to arrange about a bond, etc. Sunday, the 29th, intervened, and other causes prevented an understanding. Mr. Hassler returned to Beaufort. The libel by the Merchants' & Miners' Company was filed on the 30th of December, and bond filed by claimant. The libel was not filed by Salas until January 7, 1913. On Tuesday, December 31, 1912, Mr. Hassler and his men went on board, and, with the consent of the representatives of the libelant, remained there. In consequence of a controversy about the form of the receipt, it was not signed, nor the vessel and cargo turned over to him, until January 1, 1913. The receipt acknowledged that the claimant had "this day taken possession of said steamer and cargo, as she lies." On the 31st of December, by the consent of Chamberlain, the engineers got up steam in the main boiler of the Alcazar.

In view of the contentions made by the claimant in regard to her condition on December 28th, it is necessary to examine the evidence regarding the manner in which the anchors on the Alcazar were

dropped and the place at which she was anchored in Lookout Bight. There does not appear to be any controversy in regard to the fact that, after the Alcazar came off the shoal on December 23d, she listed very heavily—at an angle of 40 to 45 degrees. This, it seems, although unknown to the captain and crew, at the time they left her and went on the Columbia, was caused by the fact that while on the shoal they had started to pump some of the ballast out to lighten her, and when she came off into deep water she took a list to port. When she got afloat again, all the water ran down to the lee side. Her chief engineer says that they pumped out from 200 to 300 tons of ballast; that had a decided effect; gave her a list to port; after she came off, she took a sudden list to port, the water being out of the tanks—close on 40 degrees. When the prize crew from the Dorchester went on the Alcazar, they found about a foot, or foot and a half, bilge water in her—ordinary bilge water; she was not leaking. Beranger, the first officer on the Dorchester, was on the Alcazar when it was decided to anchor her. He says:

"I went forward and looked the windlass over, and, it being an Englishman, I did not understand it very well, and I knew the necessary levers to operate the windlass were locked up and I could not get at them. I tried the compressor, and the stern buckle also; and I tried to pry that out, and it would not come; and I tried the port anchor, and it would not go. I came up with both of them, and both of them went at the same time, and in paying out chain they both paid it out at the same time. I did not understand the windlass, and I gave her about 15 or 20 fathoms; did not give her much chain. We remained there about 20 minutes. During this time we wanted lights and did not have any. We were anchored, and we went down in the forecastle. We lit our way with matches until we found a lantern, and lit the lantern, and found two more lanterns and a can of oil. We came up and lighted one of these lanterns. It was at this time that the Seminole came up. We lowered a little boat, and he came up, and said Captain Chase had sent him there to tow us in. I said: 'We have just anchored. What can you do in getting the anchors up? We have got no steam.' And he said, 'We have got to slip those anchors;' and I said, 'It is a shame to let these anchors go;' and he said, 'There is no other method;' and I said, 'We can't lose these anchors and chains.'"

He says that he saw the spare anchor; they are supposed to be kept in good shape. This witness was examined at great length in regard to the manner the two anchors went off. He finally said, in reply to the question by the court:

"Tell me how it happened that two went when you only wanted one to go? That is what I didn't understand. You see it is a combination windlass and hoisting gear, and the necessary levers to operate that windlass were locked up in turrets on each side of this windlass, and we could not get in there. Then, as I said before, the starboard anchor would not go, and I put the compressor on this starboard anchor, also the turn buckle; then I tried the port anchor, and did it the same way, and that one would not go; so I came up with both of them at the same time and both of them went."

The relevancy of this and other testimony, regarding the manner in which the anchors were handled, is found in the contention, made by claimant, that the negligence, or ignorance, of Beranger, in operating the hoisting gear, deprived the Alcazar of the means of having proper anchorage in the Bight, resulting in her going aground and

sustaining injuries. After the vessel was anchored in Lookout Bight, by the Seminole, Chamberlain, with the other members of the prize crew, remained on her pursuant to the instructions of Capt. Chase. Chase had wired the Merchants' & Miners' Company, at 8 o'clock of the morning of December 26th, that he had brought the vessel, and to send a representative down to take charge.

Maj. Stickle, the officer in charge of the work by the government for making Cape Lookout Bight a safe place for anchoring vessels, was examined. Referring to conditions existing on December 27, 1912, he expressed the opinion that it was not safe to anchor a vessel drawing 18 feet of water in Lookout Bight in a southwest storm; that she would be safer at sea than in the Bight during a southwest gale. On cross-examination, upon a recital of the conditions claimed by libelants to have existed, he was asked:

"Then you think that when the Seminole took it into Cape Lookout Bight and anchored it, while it might later prove not to be an absolutely safe place, under all the circumstances it was the reasonably prudent thing to do?"

He answered:

"I do. The government proposes to make it perfectly safe by the proposed work, which is now under construction."

He further said:

"It would be the prudent thing to do under emergency, which I assume existed; and as to later disposition, it would depend on developments of the weather. It would undoubtedly be necessary to take care of the vessel after bringing her into this harbor."

Lieut. Covell says:

"There was no safer anchorage than the one selected in that vicinity. It is the safest place in that vicinity, and is considered a safe harbor in everything but a southwester, which blows into the Bight."

Lieut. Chalker, who was also on the Seminole at the time, says:

"We considered she was in a safe place. We deemed we had anchored her the best we could under the circumstances. She was in no distress when we left her. * * * At the time we left her, she was in no danger," etc.

There is other evidence to the same effect and to the contrary.

There was much testimony in regard to the condition of the anchor, with which the Alcazar was anchored in Cape Lookout Bight, by the Seminole. Chamberlain, who was on board, says that he saw the anchor when they pulled it over the side and "it looked all right to me" —did not examine it carefully. Chase says that he saw it, but did not examine it carefully. It seems that the anchor was rusted or "frozen." Its flukes did not turn, and therefore, as said by Capt. Carden and several other witnesses, it was of little or no use—nothing more than a piece of iron.

Claimant contends that it was negligent to drop this anchor without examining it. This becomes material, in view of the course taken by the vessel after being anchored. Chamberlain says that the vessel went aground when he was aboard of her. Hassler says that she was "aground" when he reached her on the morning of December 28th.

Adams, one of the prize crew, says that on the night of the 27th of December he had the watch from 12 to 6; that—

"she dragged on her anchor from the storm blowing in there; a storm was raging that night. She touched a shoal, and she was dragging, and the stern of the ship touched bottom, according to the bearing I had in that cove, and when the heel touches, her bow is bound to swing around parallel with it, and she swung around parallel with it, about 4 or 5 o'clock in the morning. The storm died down about half past 9 Friday morning, and about 10 o'clock, to our surprise, we found the ship coming up on a straight keel almost, and I stated to the second mate that we must have touched bottom. She stayed that way for two hours. * * * I never heard her pound until she started to come up straight about half past 9 Friday morning." On December 27th, "about 12 or 1 o'clock, she started to take that same list she had before again. We accounted for that by the fact that she must have gone ashore on low tide, and on high tide she floated again and took the same list she had when she was floating. She continued this as long as I was on her—until January 1st, Wednesday."

He says that after the crew of the Alcazar came on, Tuesday, December 31st, they pumped the water out of the ballast tanks on the low side and also pumped the bilge water out, and all that pumping made her come up straighter. She stayed in the same locality—did not change her position. Chamberlain gives about the same account of the movement of the vessel; that, during the time he was on her, the wind was westerly; the anchor did not drag. Hudgins, of the Life Saving Service, was on her while in the Bight; says she went aground; does not think she would have done so if she had been anchored with two anchors. There is very much contradictory evidence in regard to the location and condition of the vessel on January 1, 1913. Mr. Hassler says that, after consulting Capt. Davies and Capt. Garrod, they decided to see if they could move her; get her out of the position she was in. The Life Saving crew gave assistance. He describes the efforts made to move her, none of which succeeded. He returned to Beaufort and wired for the Seminole, January 2d, and started back to the vessel. He was caught in severe storm and went to the Seminole, Capt. Carden being in command; reached the Alcazar on morning of the 3d of January. The weather moderated. The Seminole put a line out and pulled on Alcazar, but could not move her. He returned to Beaufort Sunday morning to get lighters. He returned to the vessel Monday morning, January 6th.

Capt. Carden, in his report to the Department, gave a very full and interesting account of his coming to the Alcazar and his work, resulting in pulling her off the ground and floating her. The portions of the report, read as a part of his testimony, material to the questions discussed by counsel, are:

"The Seminole left Wilmington at 7:10 a. m., January 2d, in response to a call for assistance from the Alcazar. * * * From Wilmington to Lookout Bight the Seminole made the best of her way; by that I mean she made the best speed possible, under conditions of wind and weather. The barometer was falling rapidly throughout the day, and there was every indication of the approach of a storm of considerable intensity. At 7:10 p. m. was able to bring the ship to anchor near the Alcazar in Lookout Bight, and immediately sent an officer on board that vessel to ascertain her condition and to request the presence of her master on board the Seminole."

He met Mr. Hassler and took him on board. The officer came and made his report, as did the officer sent by Capt. Carden. He says:

"The Alcazar had been driven bodily up the beach; she had a list of 15 degrees port; she had an anchor to seaward from the bow, and was riding to this anchor by a 10-inch hawser; the anchor had failed to hold, for the ship had been driven ashore. * * * The weather conditions during the evening of January 2d continued to get worse. The master of the Alcazar was sent back to his vessel and advised that the Seminole would commence work as soon as we could sound out and take a position."

By midnight of January 2d—

"it was blowing a whole gale and close attention had to be paid to taking care of the Seminole, the sea and weather conditions continuing throughout January 3d; the wind moderating at times, but gale practically holding true all day. There was no improvement by night; in fact, by 11 p. m. great care had to be exercised over the Seminole. Steam was kept on the main engine and the vessel made ready to go ahead at full speed from the signal. * * * A heavy sea was running into Lookout Bight, and the wind, instead of coming from the southeast, as predicted, was from southwest to west. I found it necessary to pass practically all night on the bridge; that is, up to 4 a. m., when the wind and sea moderated. During January 3d, salvage operations, on account of the storm, of any kind, were out of the question. It was estimated that the wind, at times, was blowing 50 miles per hour, and the barometer, at 8 p. m., read as low as 29.30; the wind, at the time of the reading, was southwest. It was not until 10 a. m., January 4th, that I was able to send a boat from the Seminole to sound out around the Alcazar. It was apparent to me that the Alcazar had been thrown still higher on the beach by the action of the storm."

The officer sent to take soundings made his report, and Capt. Carden decided how he would proceed to float the vessel. He produced the chart which was made, showing the soundings taken. He gave an interesting account of the manner in which the Seminole, from January 4th until January 8th, operated, saying:

"On the morning of January 8th the Seminole was in position early for pulling. Removing the deck load lightened the after portion of the ship. The Seminole commenced pulling well before high water, and about 30 minutes before high water was reached the stern of the Alcazar was seen to move. All available power was exerted on the Seminole. The ship was slowly pivoted into the tackle on the quarter, and once the stern was swung clear around. The Seminole had a straight pull of it to seaward. The Alcazar moved along with the Seminole into deep water. During the last state of the pull the line leading from the Seminole's spare anchor, which was being hauled on by the Alcazar's winch, parted. This anchor had been previously buoyed to guard against such a tendency, and we were thus able to raise it later and land it aboard the Seminole; shoved the Seminole out by the stern, from her, and got aground and got the 10-inch hawser to the fore chock, from whence we pulled until the ship was well out in deep water and able to take care of herself under her own steam. We then signaled the Alcazar to cast off the 10-inch line, which was done, and, in accordance with previous arrangements, the Alcazar steamed outside the Bight and circled until we were able to plant our spare bower, with the 10-inch hawser attached and buoyed and placed in deep water; that is to say, about 5½ fathoms, with mud bottom. As soon as the anchor was placed, we signaled the Alcazar to come in. This she did, picking up the hawser from the anchor as planted, and also letting go her own anchor. After anchoring her, the weather came on thick, with considerable wind. The Alcazar began to move. It was evident that the ship would again go ashore. The ground tackle was insufficient to hold her, consisting, as it did, of the Seminole's spare bower, anchor, and the useless bower anchor of the Alcazar. As there appeared to be uncertainty and hesitancy aboard the

Alcazar, I sent an officer aboard, with instructions to urge the master to slip everything and steam out. This was done, and the Alcazar stood out at 4:30 p. m. under her own steam, on January 8th."

The log of the Alcazar, from and including January 8th, shows that she encountered stormy gales, heavy seas; that her engine was disabled; ship leaked and listed; she gave distress signals. She was evidently in great danger from the Diamond Shoals.

"All hands engaged in throwing deck cargo over from starboard side on account of heavy list to that side. Ship making water rapidly, 5 feet bilges; engineers constantly pumping."

On January 10th, weather conditions improved, and, proceeding slowly, she reached Newport News the evening of that day.

Capt. Carden says:

"Every day the vessel was left in her position which we found her in meant the piling of sand around her and sinking deeper into her bed. If prompt action had not been taken, it would have been a very serious, difficult, and expensive job—probably entailing the jettisoning of every bit of cargo in her; and I even have my doubts whether it could have been accomplished at all."

During the operations of the Seminole, 190 tons of the logwood on her deck was thrown overboard. Capt. Carden says:

"The bottom is sand; nothing there to injure her bottom, no rocks. She was stranded broad on the beach. I think the storm drove her about 100 feet on the shoal. She was hard and fast aground when we arrived there."

Capt. Carden was examined several times. The foregoing is the substance of his narrative of events which came under his personal observation. In an examination, taken subsequently, he said that the bottom on which the Alcazar rested was "as soft as an asphalt pavement." He says that he used this expression simply by way of illustration; that he intended to say that it was a very hard beach.

She went on the dry dock at Newport News and received some temporary repairs. After two days she proceeded on her voyage, arriving at Chester, Pa., January 18, 1913. After discharging her cargo, or so much thereof on deck as had not been lost, she proceeded to Kensington shipyards, where, after being examined, she underwent extensive repairs. Prior to and on the trial a large number of witnesses were examined, their testimony covering more than 1,500 typewritten pages. Many exhibits, photographs, charts, etc., were filed. The case was fully argued, orally and upon briefs, with marked ability. Both the claimant and the Merchants' & Miners' Company agree, and that is about their sole point of agreement, in suggesting that the Columbia has no standing in a court of admiralty. In respect to the value of the Alcazar and her cargo, the differences are as widely divergent as in respect to the merit of libelants' services.

Libelants insist that, when salved and delivered to the owner, the value of the Alcazar was $100,000, and that of her cargo $60,000; that the damage sustained by her, subsequent to the delivery to her owner, was due entirely to its negligence in failing to care for her safety. The claimant insists, with equal earnestness, that her value, when libelants took her in charge, was not to exceed $65,000, from which should be

deducted the cost of repairs made necessary by libelants' negligence, $51,079.35; that the value of the cargo was but $23,444.72. They agree that her freight was $7,155.81. In addition to the charge of negligent conduct on the part of the crew of the Dorchester, claimant charges that the prize crew looted the vessel, carrying off every article of personal property of any value, and injuring, defacing, and wrecking her furnishings. With all deference to the contentions of the learned and zealous counsel, it may be that a fair measure of justice may be found somewhere between the divergent lines.

An examination of the depositions and oral testimony of the principal witnesses make the impression that, while they endeavored to describe conditions as they saw them, their inferences are more or less colored by their viewpoint. The conflict between the witnesses in regard to the alleged "looting" of the vessel is quite intense—probably some human feeling finds its way into this phase of the case.

[1] Taking up the claims of the libelants, and defenses of the claimant, in the order of time in which the transaction occurred, it will be convenient to first dispose of the claim made by the Columbia. The claimant moved the court to dismiss this libel "on the ground that it does not state a cause of action." This motion is renewed at the conclusion of the hearing upon the ground that "the libelants Salas and others have not shown any facts which would support a salvage award." This motion is opposed by the learned counsel for these libelants as "untenable." The question involved in this motion is whether the service rendered by the Columbia comes within the definition of salvage. Mr. Hughes defines salvage as:

> "The reward allowed for a service rendered to marine property, at risk or in distress, by those under no legal obligation to render it, which results in benefit to the property if eventually saved." Adm. 127.

Judge Brawley, in The Apache (C. C.) 124 Fed. 905, says:

> "Any service or assistance applied for or received by a vessel in peril or distress which in any measure conduces to its safety is in the nature of salvage service."

See The Besnard (D. C.) 144 Fed. 992; The Lowther Castle (D. C.) 195 Fed. 604; The Brina P. Pendleton (D. C.) 200 Fed. 848.

Claimant, conceding the correctness of these definitions, insists that, upon the facts disclosed by the testimony, the Columbia fails, in several respects, to bring the service rendered by her within its terms.

Was the Alcazar in peril or distress? Dr. Lushington, in The Charlotte, 3 W. Rob. 68, says:

> "All services rendered at sea to a vessel in distress are salvage services. It is not necessary, I conceive, that the distress should be immediate and absolute; it will be sufficient if, at the time the service is rendered, the vessel has encountered any damage or misfortune which might possibly expose her to destruction if the service was not rendered."

In The Phantom, L. R. 1 A. E. 58, he says:

> "It is sufficient if there is a state of difficulty and reasonable apprehension."

In the Ella Constance, 33 L. J. Adm. 191, he awarded salvage, saying:

"It is a case in which there was no immediate risk, no immediate danger, but there was a possible contingency that serious consequences must have ensued."

It would seem, upon the testimony, which, in respect to the condition of the Alcazar when her crew called for assistance from the Columbia, is not seriously controverted, that she was in a state of difficulty and reasonable apprehension. Her master and his men manifestly thought so; their conduct is not open to any other interpretation. Garrod, master of the Alcazar, says that for a man to remain on the vessel, while she was listing heavily, "he would be thinking of committing suicide"—that it "was a dangerous situation." His log shows:

"Ship bumping heavily until 5:50 p. m., when she came off with assistance of engines and immediately began to take heavy port list. Until about 6:30 p. m. the ship having a list of about 45 degrees, it was decided to abandon ship and go on board Columbia, to await events. In getting aboard tug with lifeboat and one small boat, the lifeboat, on account of heavy sea, was thrown under tug's counter and broken, so that she sank immediately; the small boat being hoisted on board. In the meantime, the Alcazar, drifting to southwest, with port rail awash; * * * wind shifting to west, southwest, and northwest, and increasing to heavy gale, with tremendous sea. The Alcazar became unmanageable."

Garrod further says that, if the sea had calmed down again, he would not have hesitated to go back on the ship. It was only during the rough weather that he was afraid to go and stay on her; that, in the light of subsequent events, knowing what she went through and did not turn turtle, he does not think was in danger of doing so. The evidence makes the impression that, at that time, the master of the Alcazar did not know the cause of her listing. He had on his deck 600 or 700 tons of logwood, piled some 10 or 12 feet high. Claimant insists that, however this may be, the services rendered were of no benefit to the ship.

"Success in the performance of the service for which a salvage reward is claimed, to the extent at least of the service contributing to the ultimate safety of the property in danger, is, as a rule, necessary."

Dr. Lushington, in The Zephyrus, 1 W. Rob. 329, says:

"I apprehend that, upon general principles, a mere attempt to save a vessel and cargo, however meritorious that attempt may have been, or whatever degree of risk or danger may have been incurred, if unsuccessful, cannot be considered in this court as furnishing any title to salvage reward. The reason is obvious, viz., that salvage reward is for benefit actually conferred, not for a service attempted to be rendered."

Counsel for the Columbia insists that the evidence shows that the service rendered by the Columbia contributed to the ultimate safety of the ship. This is earnestly controverted by claimant, to the extent of suggesting that all of the evils which overtook the Alcazar, by reason of the negligent manner in which she was handled by the Dorchester, would have been avoided if the Columbia had not placed her in the position in which the Dorchester found her; that "it would probably have been better for the claimant if the Alcazar had not been thrown in the path of the Dorchester"; that she would have been overtaken by the Seminole and brought safely into harbor. What may have been the fate of the ship if she had not called to her aid

the Columbia is necessarily speculative. The rule of the law is consonant with the only fair way in which men's conduct and the result flowing therefrom must be judged. The principle, consonant with reason and supported by judicial decisions, is that the character of the service performed is not to be fixed in the light of subsequent events, but in view of conditions existing at the time of performance. In The Apache (C. C.) 124 Fed. 905, Judge Brawley finds that, notwithstanding his conclusion that, at the time the service was rendered, the vessel salved was, for the reasons stated by him, in no actual danger of sinking, the libelant, acting in good faith upon reasonable apprehension to the contrary, was entitled to a salvage award. He says:

"It is none the less a salvage service that the peril apprehended did not befall, or that the labor expended was insignificant, and performed without actual risk. These considerations affect the quantum of compensation, but not the nature of the service, or the principles by which that compensation is to be measured." The Lowther Castle (D. C.) 195 Fed. 604.

The question which has given most concern is whether the service rendered by the Columbia contributed to the safety of the Alcazar; whether the element of success is found in the testimony. Whether she would, if not towed by the Columbia, have drifted back on the shoal, is necessarily a matter of conjecture. The testimony, in regard to the wind and currents, rather tends to show that she would not have done so. Claimant insists that, upon the testimony of the Columbia's witnesses, "the Alcazar was in no danger of drifting ashore at any time on December 24th, and that the only effect of the Columbia's towing was to retard, to some slight extent, her drifting seaward." Whether she would have been "picked up" by the Seminole or Dorchester, and what result would have followed, is, of course, speculative. That the Columbia responded to the call of the Alcazar when she was in apparent danger, and that she rendered such service as was in her power, is undoubtedly true. The captain of the Alcazar says that when the Columbia left her she was "in a place of safety, but I don't say that the Columbia towed her to a place of safety, * * * because the Columbia was only just holding her head to the wind: she was drifting, the Columbia with her."

There does not appear to be any very serious controversy that when the Columbia left the Alcazar, and its master cut the hawser, it was a prudent thing to do. The fact that she was caring for 26 men, in addition to her own crew, the captain and crew of the Alcazar, who did not consider it safe to return to her, is sufficient to relieve her of the charge of abandoning the Alcazar. It is evident that, at that time, the captain of the Columbia intended to return and render her such further service as was in his power, and that he did, after getting coal and supplies, return to the place at which he expected to find her. The Columbia responded to the call of the crew of the Alcazar, at a time and under conditions which they regarded as dangerous to her position. She did all in her power to aid and contribute to her safety. In the light of what occurred thereafter, it is impossible to say, with any reasonable degree of certainty, what would have been the ultimate result if she had not done so. It would seem that her claim, at least,

for compensation, comes within the principle announced in The Camelia, 11 P. D. 2:

"That services which should have contributed to the ultimate safety of a vessel, if interrupted before completion, without default of the salvor, are entitled to some remuneration, is applicable not only to a vessel saved from imminent risk of wreck, but also to a case like the present, where the vessel is brought into a case of greater comparative safety than that in which she was when she asked for assistance."

The suggestion, on the part of claimant, that she would have been overtaken by the Seminole and had a more effectual salvation than was secured to her by the course pursued by the Dorchester, involves the merits of the controversy between her and the Dorchester, which will be considered later on. There is nothing upon which to base the suggestion that the Seminole would have gone to the rescue of the Alcazar —certainly not at the time she did, but for the call of the Dorchester; hence, whatever suggestion may be made in respect to the Seminole is necessarily based upon the fact that she was called by, and responded to, the call of the Dorchester. The motion to dismiss the libel of the Columbia is denied. The question of the amount which should be awarded to her will be considered later.

[2] The discussion of the merits of the claim made by the Dorchester has taken a wide range. It cannot be, and is not, denied that the Dorchester undertook to salve the Alcazar at a time and under conditions which justified her captain and crew in regarding her as a derelict. She had been abandoned by her crew; that is, they left her under conditions which they regarded as unsafe. She was, when discovered by the Dorchester, at 9:25 at night, listing at 40 to 45 degrees, without light or steam, in a place and under conditions which were dangerous. Capt. Chase and his crew, whatever may have been their expectation in respect to salvage, undoubtedly, in good faith and, so far as the evidence shows, on the night of December 24th, did all in their power to secure the vessel and tow it into a place of safety. The description of the efforts of the mate and his voluntary crew, as given by Capt. Chase and Beranger, leave no doubt upon my mind in that respect. It is not very material, as it affects the services rendered at that time, whether the crew of the Alcazar intended to return to her. The fact is that they were not on board, and left no evidence that they intended to return. There is much contradictory testimony regarding what they took away with them. However that may have been, the condition in which the crew of the Dorchester went upon the Alcazar did not enable them to stop and look for the personal belongings of her crew.

[3] "A vessel found at sea in a position of danger and without any one of her crew on board of her is prima facie a derelict." Law of Salvage (Kennedy) 55; The Laura, 14 Wall. 336, 20 L. Ed. 813. In The Shawmut, 155 Fed. 476 (D. C. S. C.), Judge Brawley says:

"Prima facie a vessel found at sea in a situation of peril, with no one aboard of her, is a derelict; but where the master and crew leave such vessel temporarily, without any intention of final abandonment, for the purpose of obtaining assistance, and with the intent to return and resume possession, she is not technically a derelict. * * * She was what may be called a quasi derelict."

The condition under which her crew left the Alcazar, and in which she was found by the Dorchester, distinguishes her status from The Kelton (D. C.) 181 Fed. 237. It is not very material, at this point, to fix her status in that respect. Her condition was well calculated to create the impression on the mind of Capt. Chase and his crew that she had been abandoned by her crew. There is evidence sufficient to support the conclusion that it was difficult and somewhat dangerous for the men who went upon her. Of course, it is a question of degree; and as is usual in such cases, the degree of danger is more or less magnified and minimized, according to the viewpoint. There is no doubt that the first volunteer crew who went were unwilling to take the risk and returned to the Dorchester. The difficulty experienced by the Dorchester in getting control of the vessel, the parting of the hawsers, her eccentric behavior, and the assistance rendered by the Merrimac, are all testified to by credible witnesses, who are not contradicted. Nothing is found in the conduct of the officers and crew of the Dorchester subjecting them to criticism until after the Alcazar, on December 25th, was towed into a place where it was thought advisable to anchor her. Capt. Chase was not willing, and it would seem correctly so, to take the Dorchester, with the Alcazar in tow, into the Bight; it was not safe to do so. He sent a wireless to the Seminole at Wilmington to come to his assistance. He, of course, did not know when she would arrive. It would seem, therefore, that, acting under the advice of Yeomans, of the Life Saving Service, his decision to anchor her was wise and proper. Yeomans reached the Dorchester about 4:30 p. m., December 25th, and piloted her, with the Alcazar in tow, until 9 o'clock p. m., to a point at which he says:

"I told him to let the anchor go. * * * I thought it was too dangerous to go any closer, with that ship, with a vessel as large as the Dorchester, with a tow of that kind. * * * Thought this was a reasonably safe place, under the circumstances."

Counsel for the claimant criticizes this action. Under existing conditions, it would seem that the course pursued is not justly subject to criticism. The trouble which arose after she was anchored by the Seminole in the Bight, it is insisted, resulted from the negligence of Beranger in dropping both of her anchors. It is manifest that Beranger did not intend to drop both anchors; that he did not understand how to operate the gearing and, in his effort to drop one, both went. It appears that this was the result of ignorance, rather than negligence. While his manner of getting the vessel anchored undoubtedly resulted in dropping both anchors, instead of one, as he intended, it cannot be termed gross negligence or misconduct. It is clear that, when Lieut. Covell came with the Seminole, it was impossible, in the condition of the Alcazar, to raise the anchors. It was necessary to slip them in order to take the vessel into the Bight. This condition necessitated the dropping, when she was in the Bight, of the kedge or spare anchor, and here claimant criticizes the conduct of the crew of the Dorchester. The evidence shows that this anchor was so constructed that, if in proper condition when dropped, its flukes automatically open. A model of the anchor was shown on the trial. By reason of rust, the flukes did not

open; it was said by the witnesses that it was "frozen"; the result being that it was of but little value as ground tackle.

Several phases of the controversy were urged in regard to this anchor and its condition. Claimant insists that it was negligent on the part of the crew of the Dorchester, who were in charge of the Alcazar, to drop the anchor without examining it and correcting its condition. By way of answer, they insist that they were entitled to assume that the anchor was kept in working order; that it was the duty of the crew of the Alcazar to keep it in proper condition, and, if they failed to do so, any damage sustained by its use should be attributed to their negligence. There is no doubt that the anchor was rusted, or "frozen." A number of interesting suggestions are made in regard to placing liability for the condition and use of this anchor. The weight of the evidence tends to show that, while the Alcazar was in charge of the crew of the Dorchester, both of her anchors were dropped by reason of the failure of the mate to understand the proper way to operate the gearing; that the kedge anchor, which was dropped, was not in proper condition; that if the Alcazar had not lost both her anchors, before being towed in the Bight, her ground tackle would have enabled her to keep off the shoal. There is evidence that these anchors, by reason of being exposed to the salt water, are apt to become rusty in a short time. There is no evidence that their attention was called to its condition, or that, without examination, such condition would be observed. Lieut. Covell, who was in command of the Seminole and superintended anchoring the Alcazar in the Bight, did not observe any trouble with the anchor. He says that they anchored with "the best appliances available." He thought she "was safe to anchor." The weather at that time was good.

"It would have been much better to have had one of her bow anchors. She would probably have held on there, although I can't be sure of that."

She went on the shoal on December 27th, and was never again, until pulled off on January 8, 1913, off the shoal. To what extent her conduct and condition would have been different if she had been anchored with one of her bow anchors, it is impossible to say; and to what extent the kedge anchor would, if in proper condition, have protected her, is equally conjectural. That the loss of the first, and the condition of the other, were misfortunes, cannot be doubted; and that the loss of the bow anchor is attributable to the ignorance of Beranger is equally clear. These conditions cannot be lost sight of in fixing the degree of merit to be given the libelant in awarding salvage.

If the vessel had been delivered to its owner on December 28th, or the 31st, many of the difficult questions which have given counsel and the court much trouble would have been avoided. That which occurred between December 28th, when Mr. Hassler first appeared and sought permission to go on the vessel, and January 1, 1913, when he was given possession, gives rise to questions in regard to which there is much divergence of opinion and some feeling. As we have seen, Capt. Chase, on the morning of December 26th, wired the home office of the Merchants' & Miners' Transportation Company. This telegram is not in

evidence; but it is in evidence that counsel promptly wired appropriate parties for information as to the owners of the Alcazar, and on December 27th received the desired information. Mr. Hassler, the treasurer of the claimant company, knowing that the Alcazar was on her trip, was on the lookout to ascertain, from the shipping news in the Herald, her whereabouts, expecting to see notice of her arrival at Chester, her destination. He says, and for manifest reasons stated by him, that he was very much interested in her safe arrival. A large portion of his estate was invested in the vessel and his personal interest in her safety very deep. On December 25th, he saw from the Herald that the vessel was in distress somewhere on the North Carolina coast. He immediately resorted to the most reliable source to locate her and learned that the revenue cutter Seminole was in communication with her. He promptly came to Beaufort, the nearest point from which he could reach the vessel, reaching there December 27th, where he met the crew, who, by his direction, came to Beaufort. He went as quickly as possible on December 28th, with his marine superintendent, to the Alcazar, and asked permission to go on her. His company had employed counsel in New York, and communication had been opened with counsel for the Merchants' & Miners' Transportation Company, by phone and wire, for the purpose of entering into stipulation for bonds, etc.

All parties were diligent in endeavoring to have the vessel delivered to its owner. While Mr. Chamberlain was obeying the orders of Capt. Chase, in refusing to permit any one to go on board, it would seem that the appearance and manner of Mr. Hassler and his frank statements should have secured to him at least some consideration. Failing to secure admission on his vessel, which he saw "aground," he returned to Beaufort and promptly resorted to every possible method of getting into a position to do so. Arrangements having been made between counsel, the libel was filed and bond given. Mr. Iseberg, a representative of the libelant, was sent to the Alcazar, and on December 31st Mr. Hassler was, with his crew, permitted to go on board, and at once began preparations to get her off. On January 1, 1913, receipt was signed and possession given to Mr. Hassler. Some criticism is made of the failure of Mr. Hassler to act more promptly than he did in securing the aid of the Seminole. She was aground. The crew, beginning on December 31st, to fire her engine, endeavored to move her without success. Mr. Hassler returned to Beaufort, and on the morning of January 2, 1913, wired the Seminole at Wilmington. She started at 7:10 a. m. for Lookout Bight, and reached there at 7:10 p. m. on that day—arrived in very severe weather. I am unable to perceive any unreasonable delay or negligence on the part of Mr. Hassler. He was examined orally before me. He gave a frank, intelligent, and interesting account of his experience and the course pursued by him under most trying and difficult circumstances, with his vessel aground and in danger of becoming a total wreck; a crew on board unable themselves, and unwilling for him, to take any action for her safety, a stranger, on a dangerous coast, it is impossible to doubt, after hearing him testify and seeing his manner, that he was strongly moved and anxious to leave nothing undone, at the grave peril of his life, to

save his vessel. There were no tugs or salving machinery at Beaufort, and none, other than the Seminole, at Wilmington, or nearer than Norfolk.

Harsh words of criticism on the part of either of those who were endeavoring to clear up an unfortunate situation do not afford much aid to a solution of the questions to be decided. Capt. Carden, with the Seminole, responded promptly to the call and came to the Alcazar. He acted with commendable promptness and intelligence, but before it was possible to begin operations a severe storm came up, rendering it necessary to use every precaution for the safety of the Seminole. The description of the storm on the night of January 2d, continuing through January 3d, as given by Capt. Carden, was quite graphic. The wind was "blowing a gale" from the southwest, driving into Lookout Bight; the unfortunate Alcazar being driven further on the shoal. It was not until January 4th that it was possible to begin the work of pulling her off. This was intelligently and diligently continued until, at 4:30 p. m. on January 8th, she "stood out under her own steam." The season and the weather contributed to complicating the situation. While each of the parties feel that they pursued a course entirely within their legal rights and with due regard to the rights of the other, it is manifest that, if in close touch, some of their differences would have been avoided. While the Dorchester sustained no injury in her effort to tow the Alcazar into a safe place, as said by her captain, the conditions under which the work was undertaken were dangerous, and—

"if you have a vessel worth $300,000 and 60 or 70 people, all under you, if you succeed in a thing like this, you get greatly praised; but you know what you get if you fail."

He has had 33 years' experience "in following the sea" from "cook to master," and 13 years as master mariner. His manner in testifying was frank and his testimony intelligent; his description of the situation and his manner of dealing with it clear and free from any attempt at exaggeration. The Alcazar was listing heavily. She had a deck load, approximately 10 to 12 feet high, of logwood. "She would roll the top of the load down to the water, and also the bridge, and then she would come up, so the deck load would be up, and then it would go down again." Capt. Carden says that, if in the condition described by Capt. Chase, he would regard the Alcazar "in a very dangerous position" and "a menace to navigation"; that with the currents at that place "she would have a tendency to drift on the shoals." Capt. Chase says:

"It is the currents which drift her. The current had the best of the wind, at the time the Dorchester found the Alcazar." The Alcazar was, when found by the Dorchester, "directly in the path of every vessel that goes up and down the Southern coast, except those going to Cuba, and it had been very dark, and we would have run into her before seeing her ourselves." The crew of the Dorchester found on the Alcazar a "rope, indicating that some one had been trying to tow her." This was the hawser cut by the Columbia. The weather "was getting better."

When asked why he did not wait until morning before putting a line on her, he said:

"The vessel was in a bad place, and it was my duty as a master to take her out of the place as soon as possible. You can never tell anything about the weather down here, especially in the winter time."

He says that there was danger of coming into collision with the Alcazar while towing her, by reason of a mistake in the signals; that this danger is always incident to navigating in close quarters. The condition described by Capt. Chase and the danger incident to towing the Alcazar are very similar to those described by Judge Hughes in The Great Northern (D. C.) 72 Fed. 678. The uncertainty of the wind and weather, at that season and place, is illustrated by Capt. Carden, who says that while in the Bight, on January 2d, he received a radiogram from Washington, announcing the approach of a southeast storm; that by midnight it was blowing a whole gale; "a heavy sea was running into Lookout Bight, and the wind, instead of coming from the southeast, as predicted, was from southwest to west southwest, by south, and again southwest."

It would seem that the course pursued by Capt. Chase is not subject to criticism. That he showed skill and determination to accomplish his purpose is manifest. The coming of the Merrimac was fortunate, and the aid rendered by her was valuable, if not essential to success. The first mistake made by the crew of the Dorchester was in dropping both of the anchors. Capt. Chase wisely called the Seminole to his aid. Prudence dictated that he should not take the Dorchester, with the Alcazar in tow, into the Bight. The conflict in the evidence in regard to the safety of Lookout Bight is more apparent than real. Maj. Stickle, a very intelligent officer, who has been in charge of the work being done by the government, at a cost of more than $3,000,000, to make Lookout Bight a safe harbor for vessels, says that, except from a southwest wind it was, on December 27, 1912, a safe place in which to anchor a vessel. It is to protect vessels from this danger that the government work, a sea wall, is being constructed. The testimony of the other witnesses accords with that of Maj. Stickle. Lieut. Covell, who was in command of the Seminole, and towed and anchored her into the Bight, manifestly regarded it as the "safest place available." As insisted by claimant, he was pro hac vice the agent of the libelant, and it is responsible for his conduct, in respect to the anchoring of the Alcazar. It is manifest that he thought the course pursued the best that could be done under existing conditions. It is difficult to see what else could have been done. The Dorchester was a passenger boat, running on a schedule. It was not practicable for her to stand by the Alcazar. She had been delayed 45 hours, and owed the duty to her passengers to proceed on her trip. In the absence of a crew on the Alcazar, or any evidence of her ownership, or information enabling him to ascertain the name of, or communicate with, her owners, Capt. Chase pursued the only course open to him.

[4] In the case of a derelict, the salvor is entitled to retain possession; but in such case it is not the duty of the salvor, under all circumstances, to retain exclusive possession. Law of Civil Salvage, Kennedy, 8. The right to retain possession is not absolute, but dependent upon conditions affecting the mutual rights of the salvor and owner. Dr.

Lushington, in The Lady Worsley, 2 Spinks E. & A. 255, criticized the doctrine laid down by some authorities holding that, under "whatever circumstances, it was the duty of the salvors to retain possession of the property." As the surrender of possession does not constitute an abandonment or waiver of the lien, it would seem that, unless there was a probability that, before process could issue and be served, the owner would remove the property beyond the jurisdiction of the court, or to a place rendering the enforcement of the salvors' lien more difficult or expensive, possession should be surrendered to the owner, or his representative, upon his appearance and demand, at least to the extent of permitting him to come on the vessel and aid in taking care of her. There seems to be no hard and fast rule prescribing the relative right and duty of the owner and the salvor in regard to the time of, or condition upon which, exclusive possession may be held by the salvor. The purpose of the court of admiralty is to protect the rights of both parties. The primary purpose of salving maritime property is presumed to be for the benefit of the owner. The reward given to the salvor is by way of compensation for benefit received, combined with a just regard for the general interest of ships and marine commerce, or as a reward for perilous service voluntarily rendered, and as an inducement to mariners to embark in such dangerous enterprizes to save life and property. The right to demand possession by the owner, and to retain it by the salvor, will therefore be measured by the necessity for preserving the rights of both parties.

"As a general rule, unless a vessel has been utterly abandoned, and is, in contemplation of law, a derelict, the occupying salvor has no right to the exclusive possession, and is bound to surrender to the master on his appearing and claiming charge; and the master can, in such case, employ whom he pleases, and take what measure he thinks proper, for the preservation of the ship. The court will, however, be guided by the circumstances of each case in determining whether or not the master of the salvors' vessel is justified in refusing to allow the crew of the salved vessel to return to their ownership before the completion of the salvage. And if the vessel is, at the time of the demand by the master, in such critical position that there may be risk of loss or damage to her unless the salvors are allowed to complete their operations, it seems that they may retain possession pending such completion." 24 Am. & Eng. Enc. 1225.

The conditions existing on the morning of December 28th were embarrassing to all persons concerned. The actors, on the vessel and at the Bight, were not advised as to their respective rights and duties. Chamberlain and his three associates were in charge, under instructions given them by their superior officer, of a vessel which had been found in a condition which justified them in regarding it as abandoned by her crew, for reasons which appeared to be sufficient for such abandonment. They found a hawser attached in such manner, and in such condition, as indicated an unsuccessful attempt to tow her. Such was the fact. They knew nothing, and had no means of learning, the whereabouts of the crew or of their purpose to return. The Seminole brought no information respecting their having gone to Wilmington. Capt. Chase had been to Beaufort and learned nothing of them. The Alcazar was found on a coast having a well-known record for danger and disaster to mariners and marine property. Members of the Life Saving

Service knew nothing of the fate or whereabouts of the crew of the Alcazar. Chamberlain knew that Capt. Chase had, on December 26th, notified the owner of the Dorchester that he had left them on the Alcazar—the vessel on the shoal, with insufficient anchorage, or ground tackle, and in danger of going further on, as she did. Mr. Hassler, acting under a natural impulse and in conformity with his legal rights, hastened to the nearest place from which he could reach his stranded vessel. In all that he did he acted in absolute good faith, and without any purpose of depriving the salvors, then unknown to him, of their rights or reward. The only information which he had, when leaving home in search of his ship, was that the revenue cutter Seminole was in communication with her. He had learned of the whereabouts of the crew through Mr. Sprunt, the British vice consul at Wilmington.

The account given by Mr. Chamberlain, and the other persons present, on December 28th, as to what passed between them in regard to Mr. Hassler's request and his refusal to permit him to go on the vessel, does not, in any material respect, differ from that given by Mr. Hassler. While Mr. Chamberlain was under no obligation to accept his statement, it would seem that the fact that he had gone out to the vessel, his appearance, his manner, all clearly carrying the strongest possible evidence of credibility and sincerity, would have produced on the mind of a man of fair intelligence belief in the truth of his statement. Mr. Hassler made no suggestion of a purpose to take exclusive possession of the vessel, or interfere with the possession of Chamberlain. He had not, at that time, received the telegram from his counsel, advising him to take possession by force, if necessary. That telegram directed him not to interfere with the crew left on her by Capt. Chase, but simply to do what was necessary to the safety of the ship. It is difficult to understand how Mr. Chamberlain could have supposed that Mr. Hassler intended, or had the power, to interfere with his rights in regard to possession. It is clear that he and his associates were unable to get her off the shoal, or prevent her from going further on. It is not probable that Mr. Hassler, and those who were with him, could have done so. They could have ascertained more clearly her position, tried her engine, as they did on December 31st, and been enabled to seek the aid of the Seminole earlier.

Without undertaking to inquire what injury, if any, claimant sustained by the refusal of Chamberlain to permit Mr. Hassler to go on the vessel, I am of the opinion that he was not justified, under the circumstances, in doing so. Mr. Hassler was entitled, as a matter of right, to go on board and take such action, not inconsistent with the right of the salvor, to get her off the shoal and protect her from further injury. After his unsuccessful effort to get control of, or to secure an opportunity to rescue, the vessel, he returned to Beaufort. He telegraphed his associates and attorneys, doing all in his power to get in position to secure admission to the vessel. The 29th of December being Sunday, he remained in Beaufort, where he met Mr. Boyt, who, together with Mr. Cornbrooks, had been sent by the libelant to Beaufort to inspect the Alcazar. Mr. Boyt, with whom he was acquainted, told him that the vessel was "in a bad position and something ought to be done as

soon as possible." This conceded fact "cuts both ways." Libelant finds in it the imposed duty on Mr. Hassler to "get busy"; whereas it shows that Mr. Boyt, the representative of libelant, had on the 28th made an examination of the vessel, knew her position, and appreciated the necessity for prompt action. He remained in Beaufort on Monday, December 30th, waiting for advice. It was useless for him to return to the vessel until he had some assurance that he would be permitted to go on her. Libelant sent as its representative Mr. Iseberg, and arrangements having been made between counsel for filing the bond in New York, he returned with the original crew, with the exception of one man, to the Alcazar, on Tuesday, December 31st, and was permitted to take them on board. He describes the condition which he found, saying:

"I walked over the deck load aft to the cabin, and I don't think there is anything in the world that could convey to you my feelings when I saw the state of things. I felt like a child who has broken the best thing he had ever wanted. This steamer was the realization of my life, and when I saw the cabin with everything smashed to pieces, the table upside down, * * * and it was a horrible thing to see."

In consequence of a disagreement in regard to the form of the receipt, possession was not given until January 1, 1913, but with the consent of Mr. Chamberlain steam was gotten up on the main boilers and the next day they decided to try to move her. Their effort was unsuccessful, and on January 2d Mr. Hassler wired for the Seminole to come to his assistance, with the result set forth in Capt. Carden's testimony. That the vessel was driven further on the shoal between December 31st and January 2d, when the "great storm" came on, is quite probable; to what extent is conjectural. Under the circumstances, no criticism can be made of the course pursued by Mr. Hassler, nor any injury sustained by the vessel during that time attributed to him. He was not called upon to wire the Seminole to come to his aid under the conditions existing on those days. On January 1st, with the assistance of the Life Saving crew, Capt. Davies and Garrod endeavored, by using all of the means within their power, to move the vessel. Assuming that the Alcazar was in good condition on December 23d, when she first went on the shoal, and that upon coming off she immediately took a list of 45 degrees, and assuming that, during the time intervening between that day and December 31st, we have a fairly accurate account of the experience through which she went, the conditions described by Mr. Hassler on December 31st, when he went upon her, are not difficult to understand. That she sustained injury during these days is manifest; but when we undertake to fix, with any degree of certainty, at what particular time and under what particular condition the injuries were sustained, we are in the realm of conjecture. She was on the first shoal, December 23d, only a few hours, from about 2 o'clock to 6:30 p. m., and came off without assistance. Between that time and the time she went on the shoal in Lookout Bight, she was in water of sufficient depth. What damage she sustained during this period, if any, was the result of rolling and listing. She evidently pounded somewhat during December 27th and the 31st. It was manifestly impossible for the Seminole to render any assistance prior to January 4th. It is suggested

by libelant that Mr. Hassler should, on December 28th, or prior to January 1st, have wired to Norfolk for aid. It would seem that, as the result showed, he pursued the wisest course open to him.

In regard to the conduct of Beranger, which resulted in the loss of both anchors, and the use of the kedge anchor, after the Alcazar was towed into the Bight, and its effect upon the safety of the vessel, there is a wide divergence of view on the part of counsel. The measure of duty imposed upon salvors in caring for the property under such circumstances is that they act in good faith and with reasonable judgment and skill. The Laura, 14 Wall. 336, 20 L. Ed. 813; The Infanta Maria Teresa, 188 U. S. 283, 23 Sup. Ct. 412, 47 L. Ed. 477; The S. C. Schenk, 158 Fed. 54, 85 C. C. A. 384; The Henry Steers (D. C.) 110 Fed. 583; Dorrington v. City of Detroit, 223 Fed. 232, —— C. C. A. ——. While in the application of this principle, and upon the evidence in this case, the libelant should not be held to forfeit all claim to salvage, it becomes material to be considered in fixing the degree of merit to be attached to the service as affecting the amount of the award. If the loss of the anchors and the use of the kedge anchor contributed to the condition in which the vessel was found by the claimant and the injury sustained by her, it becomes of interest to inquire as to the degree of blame, if any, which should be attributed to Beranger and his crew, in dropping the two anchors and using the kedge anchor in its "frozen" or rusted condition.

After a careful consideration of the evidence, aided by exhaustive oral argument and briefs, I conclude:

(1) That the Alcazar was, when overtaken by the Dorchester, on the night of December 24th, a quasi derelict, and the crew of the Dorchester were justified in taking such a course with her as if in truth she was a derelict—assuming, of course, the resultant liability to take such care of her as, under similar circumstances, they would have taken of their own property.

(2) The salvage service rendered, in securing control of and towing her, involved danger to their lives and the property in their care, and was therefore meritorious.

(3) That such service contributed to her safety, and although, by reason of conditions pointed out, its final outcome was not so beneficial to the owners as they anticipated, they are entitled to a salvage award, the amount to be measured by the elements uniformly recognized by courts of admiralty.

[5] The two elements, in respect to which there is an irreconcilable contradiction in the testimony and the views of the parties, are the value of the vessel and her cargo and the benefit conferred on its owners. Here there is no point of agreement. It is impracticable and would serve no useful purpose to set out the evidence at any considerable length. The Alcazar was built in 1893, and registered in Lloyd's Register—Class "100—A 1"; passed her last examination in 1912. She was purchased by claimant January 17, 1912, for $64,900 cash. On December 28th Mr. Cornbrooks and Mr. Boyt, both of whom had considerable experience and knowledge in the construction and sale of ships, representing the Merchants' & Miners' Transportation Com-

pany, went to Lookout Bight and examined the Alcazar. They place her value at $100,000. Mr. Cornbrooks saw her again at Newport News, at Chester, Pa., and in the dock at Kensington Shipyards, Pa., while undergoing repairs, made an inspection at Newport News and the shipyard, and says:

"She was in very good condition. They had the bottom plates off and could get at the interior, the tanks, etc."

He gave the prices at which several other vessels, of approximately the same size, etc., of the Alcazar, were sold during the year 1913. He used these sales as a basis of comparison to sustain his opinion. He says that, in the latter part of 1912, and during the first part of 1913, "tonnage was in demand and prices were higher." He says that all of the vessels, whose sales he referred to, were "American boats"—that they brought higher prices than vessels of similar character under the English flag. The Alcazar sailed under the English flag. Mr. Boyt, who also saw and examined the vessel, concurred with Mr. Cornbrooks in regard to her value. Both these witnesses were cross-examined, at considerable length, in regard to the basis upon which they place her value. They are intelligent and appeared to be honest in the expression of their opinions. Libelants also rely upon the estimated value placed upon the vessel and cargo by Willcox, Peck & Hughes, the insurance agents of claimant. Claimant wired counsel for libelant, December 26th, that their agents would attend to giving bond—that counsel wired the agents for information as to value for the purpose of enabling him to fix amount of bond. On December 27th, they wired counsel for libelant:

"Alcazar valued at seventy five thousand dollars, cargo about fifty thousand dollars—please wire amount bond required."

This is relevant, but not conclusive, evidence upon the question of value. Claimant avers that Mr. Hassler said to Mr. Willis, while on the vessel, that her value was approximately $100,000 and the cargo $60,000, and that, upon that information, Willis made his wreck report; and he so testifies. Mr. Hassler denies having made any statement to Mr. Willis in regard to her value. He says that he knew nothing whatever of the value of the cargo, and that, acting under the advice of counsel, he refrained from "talking." He is very positive in his denial. I am of the opinion that Mr. Willis is mistaken in saying that he received the information regarding the value from Mr. Hassler. It is quite certain that he did hear the estimate, as he reported it. Mr. Cornbrooks and Mr. Boyt had, prior to the time Mr. Willis fixes the alleged conversation, expressed their opinion in regard to her value and telegraphed to the Merchants' & Miners' Transportation Company. It was doubtless a subject of conversation between the "prize crew" and other persons interested in her value. It is quite improbable that Mr. Hassler should have made the statement, and equally probable that Mr. Willis heard it from others about the place.

Counsel for libelant further insist that claimant, by the solemn admission in its answer that the value of the Alcazar, "prior to her

£12,250, or $61,250; "but, in order to get that price, we had to put her through the survey, costing between £2,000 and £2,500, $10,000 or $12,500, in repairs to get her in her class" in Lloyd's Register. This was in 1914.

While it is true that sales made one year prior, and one year subsequent, to the date at which the value of the vessel is to be ascertained, are not of controlling probative force, yet, as said by the court in The Albert Dumois, 177 U. S. 255, 20 Sup. Ct. 595, 44 L. Ed. 751, it is better evidence than the conflicting opinions of experts, an illustration of which is seen in The Haxby, 83 Fed. 715, 28 C. C. A. 33. There is no suggestion that Mr. Hassler bought her for less than her value. Mr. Garney says that he advised against the purchase. She was then 18 years old. All of the witnesses concur in saying that the percentage of deterioration at that age is quite large. It does not appear that any repairs were put upon her after the purchase by Mr. Hassler. There is abundant uncontradicted evidence that Mr. Hassler used every possible effort to secure her full value. It was to his interest to do so. He had spent $51,000 on repairs, and, to make the sale at $61,250, he was obliged to spend as much as $10,000 more. According to the decided weight of the opinion evidence, she was not worth to exceed $63,000, when she was overtaken by the Dorchester, on December 24, 1912. It is not denied, and is abundantly proven, that the amount expended for repairs was necessary, and of this $1,881.30 were not due to recent damage, which leaves the net amount for repairs caused by the injuries sustained between December 24, 1912, and January 10, 1913, when she reached Newport News, $49,159.65, thus leaving her actual value, on that day, $13,840.35.

The question around which counsel have had strenuous struggle is the location of liability for this result. The situation comes to this: The Alcazar was worth, when the salvage service was begun, about $63,000. When she was placed on the dry dock at Newport News, she was worth $13,840.35. She was surrendered to her owner, for practical purposes, December 31, 1912, aground, in Lookout Bight. She went on the shoal, while in possession of the salvor, December 27th. Between December 23d and December 27th she had been listing heavily—abandoned, in fact, by her crew, because in a dangerous condition. She had, as her cargo, 2,800 tons of logwood, 700 tons piled on her deck, 10 to 12 feet high. Claimant charges that her injuries should be attributed to three causes, each of which, it alleges, resulted from the acts of the salvors: (1) That she lost both her bow anchors; (2) that she was anchored in an unsafe place; (3) that, by the negligence of the salvor, the anchor used in Lookout Bight was rusted or "frozen" and unfit for use. I am of the opinion that Lookout Bight was the safest available place in which she could be anchored, and that no blame attaches to the Dorchester in that respect; that the loss of the bow anchors and the use of the kedge anchor, while not sufficient to sustain an action for negligence, should be taken into consideration in fixing the degree of merit attaching to the salvage service. I am of the opinion that both causes contributed to the condition in which the Alcazar was found on December

28, 1912; to what extent and how far is necessarily conjectural. I am inclined to think, from the evidence, that, as said by several of the witnesses, the vessel was, before her misfortune, "in a run-down condition," and was not worth so much as $63,000. It is not very material on the question of her value whether the necessity for spending the large amount for repairs resulted from her condition before going aground, or because of injuries sustained while aground. The result is the same. Her value was not so large as thought by libelant's experts.

If it be said that when, on January 1, 1913, she was delivered to the claimant "as she lies," such injury as she had, to that time, sustained is to be charged the salvors, and that injury sustained subsequent thereto is to be charged to claimant, other questions at once arise: Whether, and to what extent, the condition produced by her anchorage continued to contribute to the injury sustained until she reached Newport News; whether, if possession had been surrendered on December 28th, the injury sustained by the "great storm" of January 2d would have been averted, etc. It is manifestly impossible to separate the injury with any degree of accuracy, either in respect to time or cause. An appeal to the common-law doctrine of proximate cause for the purpose of fixing liability for any specific act of omission or commission, by either party, is impracticable, and would lead to unsatisfactory results. Courts of admiralty have wisely applied the doctrine of comparative negligence or divided liability for injury sustained by collisions, and apportioned the damage and burden. This doctrine has been applied in cases of collision, not because it is logical, but because of necessity, or because it is more consonant with justice. While the practice had its origin in collisions, it has been applied in other cases.

In The Max Morris, 137 U. S. 1, 11 Sup. Ct. 29, 34 L. Ed. 586, its history and application is discussed by Mr. Justice Blatchford. He said:

> "Some of the cases referred to show that this court has extended the rule of the division of damages to claims other than those for damages to the vessels which were in fault in a collision. * * * They show an amelioration of the common-law rule, and an extension of the admiralty rule in a direction which we think is manifestly just and proper. Contributory negligence, in a case like the present, should not wholly bar recovery."

While not strictly analogous, the reason of the thing leads to the same conclusion. The tendency to thus deal with similar conditions is seen in the Employers' Liability Act (Act April 22, 1908, c. 149, 35 Stat. 65 [Comp. St. 1913, §§ 8657–8665]). While in the strict sense of the term, neither party was guilty of wrongdoing—a tort—they were dealing with a condition produced, in part, by causes for which no one was liable—the elements, the sea, the winds, currents, and shoals. If the crew had not left the Alcazar, as they now insist was unnecessary, but few, if any, of the misfortunes which she sustained would have overtaken her. Their abandonment of the vessel in a sense, and to a degree, was the first act of an intelligent human agency, creating a condition, which produced results involving the crew of the Dorchester

in a difficult salvage service. Their absence from the vessel, in a measure, contributed to the loss of her two anchors; if they had remained or returned to her, as it seems they could have done by the same means used by Mr. Hassler, Beranger would not have found conditions which resulted in the loss of the anchors. Again, there is evidence that it was their duty to keep the kedge anchor in proper condition for use in case of an emergency. These are only illustrations of the numerous co-operating causes contributing to the final result.

Without extending the discussion, I am of the opinion that a division of the cost of repairing the vessel on account of recently sustained damage is, pro hac vice, approximately fair. This places the valuation as a basis for fixing the amount of award, so far as value is an element, at $38,420.17. The parties are as far apart in regard to the value of the cargo as of the vessel. Claimants have filed exhibits showing actual weight, value, etc., together with evidence of its value. Eliminating several items in regard to which there is controversy, I find that the value of the cargo was approximately $25,000 and the freight $7,155.81—making a total of $70,575.98. There is an irreconcilable conflict in the testimony in regard to the alleged spoliation and carrying away of articles from the vessel. I am inclined to the opinion that this has been exaggerated, both as to extent and amount. I am impressed with the belief that, in the hurry of leaving the vessel, and the uncertainty of their return, the crew of the Alcazar took away with them quite a large quantity of their personal belongings. It is certain that nothing of much value was taken away by the crew of the Dorchester, when they left the Alcazar at anchor, other than the mail packages which Capt. Chase delivered to the post office authorities. Counsel frankly conceded that no point was made in regard to this. I am unable to find that the four men who remained on her until January 1st took with them, or carried away before leaving, articles of much value. They, of course, used so much of the provisions on board as were necessary for their support. This they were entitled to do. It is evident that some feeling has been engendered between the witnesses in regard to this subject. The condition of the furniture, fittings, etc., found by Mr. Hassler, may be accounted for by reference to the heavy listing and rolling of the vessel for several days and her pounding with the rise and fall of the tide while aground, prior to December 31st, when he went on her. I see no reason for fixing liability for these conditions upon the crew of the Dorchester. While this conduct was improper, I am not inclined to attach much importance to it in fixing the award.

Complaint is made that both libelants made excessive demands for salvage and required large bonds. This is true, but the only information which counsel for the Merchants' & Miners' Transportation Company had, as to value, was furnished by the insurance agents of claimant, who put the value of the vessel and cargo at $125,000. It seems that counsel for the Columbia had practically the same information. At the time the libels were filed, none of the parties supposed that the cost of repairs would be so large. The evidence in regard to the Dor-

chester puts her value at $125,000, and the Merrimac at $110,000. I do not find any evidence of the value of their cargoes. The evidence tends to show that the value of the Columbia is about $50,000. Neither of the vessels sustained any injury, nor were any of their crew injured. Except in going on the Alcazar, on the night of December 24th, none of them were in serious danger of injury.

Counsel devote considerable portions of briefs to the citation of cases discussing the moiety rule in cases of derelicts. They do not seriously controvert the conclusion that the rule does not now obtain, and is not considered as controlling in fixing amount of awards. It is referred to in The Cato, Fed. Cas. No. 13,786, as "exploded." In the B. C. Terry (D. C.) 9 Fed. 920, it is said that in the early part of the last century (eighteenth) the correctness of a rule of fixed proportions began to be questioned, then discountenanced, and at length abandoned, and a flexible and more salutary rule was declared by the British admiralty, and approved and adopted in this country, by the Supreme Court of the United States, in Post v. Jones, 19 How. 150, 15 L. Ed. 618. The elements entering into a salvage award have been so frequently stated and so uniformly adopted that they need not be repeated. Judge Hale, in The Lyman M. Law (D. C.) 122 Fed. 816, says that Judge Hughes, in The Sandringham (D. C.) 10 Fed. 556,

"in a masterly and exhaustive opinion reviews the principles upon which cases of this character should be decided. * * * Embodying the result of the decisions of the English and American courts of admiralty, the Board of Trade laid down the rules to be considered in determining the amount of the award."

After naming six elements which the court should consider, he says:

"And Judge Hughes adds a seventh consideration: The degree of success achieved, and the proportions of value lost and saved."

It is in applying the last, and the one in regard to which counsel differ most widely, that I find most difficulty. As said by Judge Goff in The Haxby, 83 Fed. 715, 28 C. C. A. 33:

"The law relating to the question of salvage, as well as the rule by which the same is to be applied to the facts of any given case, has been repeatedly announced and illustrated in decisions of the Supreme Court of the United States. * * * It is hardly safe to make comparison of cases of this character, unless at the same time careful attention is given, and proper discrimination made, as to the facts and the special circumstances existing in each case."

While this is manifestly true, it is also true that such examination and discrimination discloses a fairly harmonious and orderly development of judicial thought on the subject and removes it from the field of arbitrary personal opinion. Like so many subjects in the domain of the common law, precedent "embalms a principle" and a rule of more or less safe general application is established. In The Lyman M. Law, supra, it is said:

"It is not necessary * * * to discuss the * * * question whether or not the schooner was a derelict, or to consider all the old learning upon the subject of derelicts. The question to be decided is in what peril the vessel was found, and what reward should be given for the services rendered by the

salvors. It cannot be doubted that the crew abandoned the schooner in great haste, in fear of their lives; the seamen taking with them their personal effects."

As said in The Great Northern (D. C.) 72 Fed. 678:

"Towing a disabled vessel on the high sea, owing to the latent danger from the multiform accidents to which ships are constantly liable is always a salvage service."

In the presence of wrecks, in the regular track of vessels, without lights, in the nighttime, especially in thick weather, with no one to give warning of their location, may justly alarm, for they are liable to occasion great loss of life and property. The ship salved was of about the same dimension as the Alcazar, valued at $100,000, and an award of $10,000 was made by Judge Hughes. The crew remained on the Great Northern.

In The Minnie E. Kelton (D. C.) 181 Fed. 237, the crew temporarily abandoned the vessel. Judge Wolverton says:

"The allowance of salvage is based upon two considerations—one, of public policy, which suggests a liberal bounty to induce vessels and water craft to turn aside from their regular course and endure the hardships and perils of removing dangerous wrecks from the pathway of commerce; and the other, to restore the wreck of disabled vessel to the owner, and the service which is adequately commensurate with the successful performance of the undertaking is * * * of high merit, and the award is therefore measured accordingly."

The value of the Kelton was fixed at $45,000. The cost to repair the damage sustained was $20,000. She had a cargo of lumber valued at $36,000. An award of one-sixth of the value, after deducting the cost of raising the vessel and repair, was made.

In The Apache (C. C.) 124 Fed. 905, Judge Brawley says:

"It is the policy of the maritime law to encourage spontaneous services rendered in going to the aid of a ship in distress by giving some remuneration beyond the value of the work actually done, as an encouragement to induce the salvor and future salvors to incur risk in saving life and property; but this extra remuneration is always proportioned, * * * and it is never the policy of the law, nor in accordance with justice, to allow a situation created by calamity to be converted into an opportunity for extortion."

The value of the tugs salved was fixed at $20,000 to $30,000 each, and an award of $1,500 each was made.

In The Edith L. Allen (D. C.) 139 Fed. 888, Judge Adams said that, while the schooner was not, strictly speaking, a derelict, she might justly be so considered for salvage purposes, her value was $25,000, an award of $8,000, with reimbursement for actual expenses, was made. In The Haxby, supra, the value of the property used in the service was about $117,000. The court gave an award of $16,666.

Judge Hughes, in The Sandringham, supra, said:

"The task of the wreckers was full of toil and risk, performed as it was on a dangerous coast, liable to sudden storms and sea swells. The work was bravely undertaken, perseveringly and faithfully pursued, and successfully accomplished."

The value of the vessel saved was $193,000. An award of one-fourth her value made.

In The Lamington, 86 Fed. 675, 30 C. C. A. 271, Judge Lacombe says:

"'Regard is always paid to the value of the property saved, and an award will not be made of such an amount as to deprive its owners of the benefit of the service, with the view of recouping to salvors their losses. It is one of the risks they run that they may not be indemnified for their sacrifices. It is said that the court of admiralty has hardly ever, and then only in the case of a derelict, awarded as salvage more than half the value of the property saved.' * * * That the compensation of salvors is subject to reduction, even below a fair quantum meruit, when otherwise nothing would be left for the owner, is a proposition approved in the opinions of the courts in the following cases, although in none of them are the facts exactly like those in the case at bar."

Following this language is a careful analysis of a large number of cases. While, for the reasons stated, and for the purpose of fixing approximately the value of the vessel and her cargo, they are fixed at the amount named, it is manifest that the owners received in actual value only about $13,840 in the Alcazar, and the owner of the cargo only about $23,000, which, with the freight, is approximately $45,000. An award will be made to the Columbia of $1,000 and her expenses, $1,033.63, and to the Dorchester and Merrimac of $10,000 and expenses incurred, $2,097.89. The cost of depositions will be taxed against the party taking them; that is, the cost of witnesses, commissioners, and stenographers. The balance of the cost will be taxed against the claimant. The question of apportionment of the award between the vessel and crews will be retained for further consideration; if not agreed upon, a reference may be taken.

A decree may be drawn accordingly.

HEUBLEIN et al. v. WIGHT et al.

(District Court, D. Maryland. November 19, 1915.)

1. CORPORATIONS ⟹320—MANAGEMENT OF CORPORATE BUSINESS—POWER OF COURTS TO REVIEW—RIGHTS OF MINORITY STOCKHOLDERS.

While, in general, a court is without authority to interfere with the management of the business of a corporation by a majority of its stockholders, yet their action in a matter in which their personal interests are opposed to the interests of the corporation is subject to review by the courts at the instance of minority stockholders.

[Ed. Note.—For other cases, see Corporations, Cent. Dig. §§ 1426–1431, 1433–1439; Dec. Dig. ⟹320.]

2. CORPORATIONS ⟹320—MANAGEMENT BY DIRECTORS—EXCESSIVE SALARIES—RIGHTS OF MINORITY STOCKHOLDERS.

A stockholder, who owned one-third of the stock of a corporation, *held* entitled to relief in equity against the action of the president, secretary-treasurer, and a selling agent, who were all members of the same family, owned a majority of the stock, and constituted a majority of the board of directors, in fixing their own salaries as officers at amounts which were unreasonably high, in view of the business and earnings of the corporation, and largely in excess of the value of the services rendered to the corporation, and this, although the same salaries had been in effect

for a number of years, during the time when the business was more prosperous.

[Ed. Note.—For other cases, see Corporations, Cent. Dig. §§ 1426–1431, 1433–1439; Dec. Dig. ⟹320.]

In Equity. Suit by Gilbert F. Heublein and Louis P. Roberts against John H. Wight, William H. Wight, Frank L. Wight, and the Sherwood Distilling Company of Baltimore City. Decree for complainants.

Haman, Cook, Chesnut & Markell and Vernon Cook, all of Baltimore, Md., for plaintiffs.

Keech, Wright & Lord, W. H. De C. Wright, and Robert R. Carman, all of Baltimore, Md., for defendants.

ROSE, District Judge. The defendants are the Sherwood Distilling Company, a Maryland corporation, hereinafter called the Company, John H. Wight, its president, his brother, William H. Wight, its secretary-treasurer, and his son, Frank L. Wight, one of its salesmen. They are all citizens of Maryland. The two elder Wights between them hold a majority of its capital stock. Each of the three individual defendants is in receipt of a very substantial salary from the Company. These salaries are fixed by the directors. Each of them is a director, and the three of them constitute a majority of the board of five.

The plaintiff, Gilbert F. Heublein, is a citizen of Connecticut. He owns almost precisely one-third of the Company's stock. One-half of his holdings stand in the name of his coplaintiff, Louis P. Roberts. The latter has no real interest in the Company and no concern in the outcome of this litigation. When the word "plaintiff" is used, the reference is to Heublein.

The substantial complaint of the bill is that the three Wights have used their control of the stock and of the board of the Company to get for themselves salaries far in excess of the value of their services, and unwarranted by the financial condition of the Company. In July, 1915, the plaintiff, through his representative on the board, unavailingly sought to have these salaries reduced. The bill asks that such reduction be made by this court.

Many years ago the father of the two older defendants, and their uncle, one Edward Hyatt, went into the distilling business at York, Pa. They subsequently removed to Cockeysville, in this state, and were there established as early as 1868. They originally operated as copartners, but in 1882 the Company was organized with a capital of $30,000. The defendant John H. Wight was one of the original stockholders. He increased his holdings; he bought some of those of Hyatt. Ultimately all of his father's stock came to him and his two brothers, the defendant William H. Wight and one Alpheus H. Wight, who will be hereafter referred to. Hyatt died in 1894. The three Wight brothers owned among them 200 of the Company's 300 shares; 33 others stood in the name of a Mrs. Vanneck, a daughter of Hyatt. By the latter's will he left the remaining 67 shares to the defendant John H. Wight, in trust, to hold the same for 10 years for the benefit of his widow and daughter, and at the expiration of that period to turn over

50 shares to his widow and 17 shares to his daughter. For 10 years after the death of Hyatt the Wight brothers held in their own right, or one of them held in trust, all the stock of the corporation, except the 33 shares which belonged to their cousin, Mrs. Vanneck. The defendant John H. Wight had her full confidence. Dailey v. Wight, 94 Md. 269, 51 Atl. 38.

In September, 1905, shortly after the 10-year trust expired, there was a meeting of the board of directors of the Company. There were present only the defendants John H. and William H. Wight and one Geddes. The last named was bookkeeper of the Company, held none of its stock, and cannot be assumed to have been in a position to have exercised any judgment independent of that of the Wights. At this meeting the salary of John H. Wight was raised from $10,000 to $15,000 and of William H. Wight from $5,000 to $7,500. Their salaries have remained at those figures ever since.

About the time that this increase was voted, the 50 shares which had passed to Hyatt's widow, who had become a Mrs. Dailey, came upon the market. The stock was offered to the plaintiff and his brother, since deceased, and they ultimately bought it. Before doing so, however, they had one or more interviews with the defendants John H. and William H. Wight. The latter had neither liking nor respect for the Heubleins. They thought they knew that the Heubleins had been in the habit of mixing inferior, or at least less famous, whiskies with the Sherwood whisky, and then branding the compound in exact imitation of the Company's genuine and unadulterated product. This practice had been stopped about 1903. There had been an adjustment, with which the Wights professed themselves satisfied; but their opinion of the Heubleins apparently remained unchanged. They did not want the latter in the Company. They told them that if they bought the stock they should not forget they were buying a minority interest and would be only minority stockholders. Precisely what significance the Wights attached to this warning does not appear, otherwise than may perhaps be gathered from their subsequent actions. The record does not show whether they attempted to secure the stock themselves, or, if they did, why they did not succeed.

The annual profits of the Company for each of the six years from 1902 to 1907, inclusive, averaged $70,000, or 2⅓ times its then capitalization. The plaintiff paid for the stock he first purchased 15½ times its par value. In 1907 those interested in the Company thought it best to increase its capitalization. To this course the plaintiff consented. The Company distributed what may be called, for lack of a better term, a bond dividend of $300,000; that is to say, it issued $300,000 of bonds and at least attempted to secure them by mortgage. These bonds were distributed among its stockholders, so that every holder of one share of the Company's stock received $1,000 of the bonds. As the defendant owned 50 shares, he received $50,000 of bonds, and apparently still holds them. The capital stock was increased from $30,000 to $700,000; that is to say, for each share of the old stock 23⅓ shares of new were given. The earnings of the Company for the six years preceding this augmentation of the nominal capital would have allowed the payment

of 5 per cent. interest on the bonds and left enough for a dividend of between 7 per cent. and 8 per cent. on the new capital stock.

But, as has happened to many another company, the increase in capitalization was followed immediately by a great reduction in profits. The average of these for the eight years succeeding 1907 was $35,000 a year, or only one-half of what they had been for each of the six years preceding that date. In the answer and the various statements submitted by the accountants, the total profits for the eight-year period foot up $293,136.17; but in all fairness there should be deducted from this total a net loss of $12,872.91 incurred in the operation of the Dairy Food Company. All the stock of this latter company is held by the Sherwood Company; all its assets and liabilities appear upon that company's annual balance sheets. The subsidiary company's net loss in operation is carried as an asset of its parent. Of the remaining $280,-263.26, $120,000 has gone to pay interest on bonds. This left $160,-263.26, which was theoretically available for dividends on capital stock. Dividends, however, were paid in only four of the eight years. None were paid in 1909, and none have been paid in any year since 1912. During the eight years, the aggregate dividends paid were $133,000, or at the rate of $16,666 a year, a sum equivalent to a little over 2 per cent. on the capital stock. On its books, the net increase of the Company's surplus during the eight-year period was, after deducting the loss of the Dairy Food Company, $27,263.26. Nevertheless the excess of the value of the quick assets of the Company over its current liabilities is probably less that it was at the beginning of the period, as it certainly is less than it was in 1910, the first year for which a detailed balance sheet appears in the record. This result is due to the fact that the Company has had to lock up some $90,357.17 in the buildings and machinery of the Dairy Food Company. As a consequence, although the Company has since 1910 charged off $59, 246. 92 to depreciation, its building and machinery account shows an increase of $36,387.74 in the last five years. Moreover, in 1910 the Company was using some $76,-000 lent to it by its stockholders and friends. On July 1, 1915, this sum had been reduced to $35,000, and the Company will apparently shortly be called upon to pay off some $28,000 of that. The change in the state of the Company's affairs is reflected, among other things, in a reduction of the cash on hand from $66,531.27 on July 31, 1910, to $15,805.34 on the 1st of July, 1915.

Ever since the plaintiff became a stockholder, there has been recurring friction between him and the two elder defendants. From time to time he suggested that the salaries paid were very large. These suggestions were usually ignored and have never been accepted. Some years ago the plaintiff sought to have the Company's books audited by accountants of his own selection. The Wights refused. They said, and they doubtless believed, that the plaintiff's purpose was to secure a list of the Company's customers, so that he might unfairly compete with it for their trade, to his gain and its loss. Litigation followed. Wight v. Heublein, 111 Md. 649, 75 Atl. 507. When that case came back to the lower court to be tried, as the Court of Appeals directed, upon its merits, the parties reached an agreement that the Company

would put one set of auditors to work and the plaintiff another, but that those employed by him should have no access to the books which contained the names of the Company's customers. In a very few days after the audit began, two of the Company's employés, namely, its bookkeeper and its distillery superintendent, were each found to be defaulters in large sums, aggregating for the two, as finally determined, nearly $40,000. After this discovery, all the Company's books were thrown open to the plaintiff's auditors, under promise, however, that they would not copy the names of the customers. Up to that time the bookkeeping of the Company had been poor. The highly paid president and secretary-treasurer had assumed that the far more moderately compensated bookkeeper and superintendent needed no watching. Since then the accounting methods of the Company have been good. Its books are subject to annual independent audits. The auditors furnish a copy of their report to the plaintiff, omitting from his copy the names of the company's debtors, presumably to keep him from obtaining from such list the names of many of the Company's customers. This omission is unimportant, except that on one or two occasions the discovery otherwise by the plaintiff of certain facts which the list of debtors would have disclosed, and which, if known, might have given occasion for some more or less legitimate criticism, has led him to suppose that such facts had been intentionally suppressed. The friction and the hard feeling between the parties were thereby increased.

When in the first audit that was made the books covering the preceding five years were examined, the cost was considerable, and from the fact that the Company or the Wights had one set of auditors, and the plaintiff another set, the expense was larger than was strictly necessary. When the audit was completed, the plaintiff felt that, in view of the disclosures resulting from it, the Company should pay his auditors. The Wights thought not. After considerable negotiation, and apparently some friction, the Wights agreed that the Company should pay the bill upon condition that the plaintiff should sign a letter or receipt to the effect that:

> "We accept this check in full settlement of all grievances which we have heretofore had against the Company, or its officers, so far as the conduct of the Company has been made known to us. We know of nothing which will interfere with our pleasant relations in the future, for which we earnestly hope."

This letter was dated January 12, 1911. About March 9, 1913, the plaintiff purchased 1,166 shares, which had formerly stood in the name of John T. Vanneck, apparently the son-in-law of Edward Hyatt. With this stock plaintiff acquired no bonds, so that, while he owns one-third of the stock, he has only one-sixth of the bonds. For some reason the plaintiff did not have this stock transferred to his own name, but to the name of one Louis P. Roberts, who, as already stated, is nominally a coplaintiff in this case. At the time of this last purchase the plaintiff knew, and had known for at least three years, that the defendant John H. Wight was drawing $15,000 a year salary, and his brother, William H. Wight, $7,500. In the three preceding years

the stock had paid dividends, although the dividend for 1912 was at the rate of only 3 per cent. For the second purchase plaintiff paid $25 a share, or a total of $29,150. His total investment in the Company is accordingly $106,650.

Upon his first investment of $77,500 he has for the 8½ years received interest on his bonds at the rate of 5 per cent. per annum, or $21,250 in all, and on his stock dividends to the amount of about $36,900, or a total of $58,150, or at the rate of little less than 7½ per cent. per annum. On his second investment of $29,150, he has received nothing whatever. In the last three years of the period his total return on the $106,650 he has in the Company has been only $2,250 a year, or about 2 per cent. Not unnaturally, under these circumstances, the plaintiff's conviction that the salaries of the Wights were far too large has been intensified. In 1914 he renewed his protest against them. At that time the defendant William H. Wight said that, if the surplus of the Company was cut into during the next year, he would voluntarily agree to a reduction of his salary. During that next year the surplus was reduced, upon the face of the official audit, $4,738.98. In addition, plaintiff ascertained that there had been a loss of $2,174.59 upon a debt of a customer who had gone into bankruptcy. On the other hand, there was a net profit during the year in the operations of the Dairy Food Company of $3,724.63. This had not been brought into the profit and loss account of the defendant Company, but had been used to reduce an amount that was carried as due by the Dairy Food Company to the defendant Company. After these corrections are made, the net reduction in the surplus during the year amounted to $3,188.94. The defendant William H. Wight, however, says that there was no impairment of the surplus, because during the year the Company refunded to himself and his brother certain sums which they had individually paid for taxes on the capital stock standing in their names. What the amount of these taxes paid during the year was, or precisely upon what theory such payments were supposed not to be payments out of the Company's revenue or surplus, I confess I do not understand. At all events, he was not willing to accept any reduction in his salary.

It can be stated in passing that some two years ago the plaintiff had asked to be made a director of the company. The Wights were not willing, but they did thereafter elect to the board a gentleman who had sometimes represented the plaintiff at the stockholders' meetings in Baltimore, and who was manager of his business in Hartford, Conn. At the directors' meeting in July, 1915, there were present the three individual defendants, Mr. Alpheus H. Wight, a brother of John H., and William H., and the plaintiff's representative, Mr. Booth, so that at the directors' meeting there was actually represented every share of the company's stock. During the preceding year the defendant Frank L. Wight had been made assistant salesman of the Company at a salary of $4,200. He had previously been in its employ in other capacities at a compensation which had never exceeded $205 a month, or $2,460 a year. He succeeded a salesman whose salary in the later years of his connection with the Company was $4,000. Earlier in his

employment it had been less. The defendant Frank L. Wight was therefore employed in a business with which it does not appear that he had become familiar at $200 a year more than the experienced man who had preceded him had received.

At the directors' meeting in question, Mr. Booth moved that the salary of the president be reduced to $7,500 a year, and that of the secretary to $5,000. At first this motion was not seconded. The defendant John H. Wight was in the chair, and he stated that, if it was not seconded, nothing more could be done with it. Thereupon Mr. Alpheus H. Wight said he did not wish to be placed in a position of antagonism to his brothers, but in order to bring the motion before the meeting he would second it. Mr. Booth voted for the resolution, the three individual defendants against it, and Mr. Alpheus H. Wight declined to vote either for or against it. Mr. Booth then moved that there be only one salesman, instead of two, and that the salary paid such salesman should not exceed $6,000 a year. At that time and now the Company is paying $8,000 to one salesman and $4,200 to another. On this resolution Mr. Alpheus H. Wight was recorded with Mr. Booth in the affirmative, but it was voted down by the three individual defendants. This suit followed.

At the hearing the plaintiff called as his first witness the defendant John H. Wight, apparently to show two things: First, that his services to the Company were worth only a small fraction of $15,000 a year; and, second, that in his relations with the Company, whether as president or director, it was impossible for him to get permanently out of his head the idea that the Company belonged to himself and his brother, that the plaintiff had no right to expect to be consulted about anything, that any questions he might ask about the Company or any suggestions that he might make as to its management were mere impertinences, and that subconsciously, if not consciously, the witness did not feel that the plaintiff had any right in the business which he and his brother were bound to respect. Perhaps no better witness to sustain both these propositions could have been found.

The Sherwood whisky is one of the celebrated whiskies of the country. It brings from 2½ cents to 5 cents per gallon more than most, if not all, other rye whiskies. Its reputation must depend in the first place upon the possession of qualities which make it attractive to consumers of a high-class whisky, and, secondly, on the skill with which it has been advertised and marketed. None of the defendants even claim that their services have in any way contributed to the first of these. Not one of the three knows or pretends to know the slightest thing about distilling. The president of the Company visits the distillery perhaps about half a dozen times a year, and when he is there he does nothing more than walk around and shake hands with the employés. The secretary-treasurer, during the operating season, does go to the distillery every morning, sometimes in the afternoon, but he knows nothing about the distiller's art. He looks after the construction and repairs.

For many years prior to 1913, the whole business of making the whisky, including the inspection of the raw material used, seems to

have been absolutely in the hands of a superintendent, who received about $2,000 a year, and of a yeast man, who was paid $5 a day when the distillery was actually running. To them, or to the water used, or to some other still more occult cause, the quality which gave the whisky its vogue must have been due. With that part of the business the Wights had nothing to do. The efficiency of the distillery, as shown by the number of proof gallons of whisky obtained from each bushel of grain, was never very high. It seemed to be tending downwards. As the defendant John H. Wight said, they never tried to increase the yield. They never knew anything about it. They then employed a Mr. Boykin, who had made some study of scientific distilling, and had considerable practical experience in the management of distilleries, to examine the Sherwood plant, to see whether the yield could be improved. This gentleman found the machinery and arrangements antiquated. He thought that, if improvements were made, the yield would immediately increase. He was ordered to make the changes he recommended and to put the new methods into operation. He declined to do so unless he was employed for three years at $300 a month for each month during which the distillery was operated. He was not expected to spend all of his time at the distillery, or indeed, after the new methods had been put thoroughly into operation, any considerable portion of it. He accepted the employment, the changes were made, the methods recommended by him introduced, with the result of increasing the yield, which in the years 1912–13 had fallen to 3.93 proof gallons to each bushel of grain, to 4.25 gallons in the season of 1913–14, and to 4.33 in the season of 1914–15. What he did therefore resulted in an increase in yield of four-tenths of a gallon of whisky for every bushel of grain consumed. The yield in the season of 1914–15 was about 37,835 gallons more than it would have been, had the ratio of yield been no greater than it was two years before. At 57½ cents a gallon, the increased amount of whisky produced was worth $21,735. Mr. Boykin's employment will end at the close of the season of 1915–16.

A couple of years ago another son of the defendant John H. Wight, a man then about 40 years of age, who had been superintendent of an acid plant of a very large chemical company in Baltimore, at Mr. Boykin's suggestion gave up his place with the chemical company and went into the distillery, to act as understudy to Mr. Boykin, and to be ready to take his place when the latter's three-year contract expired. He was getting $50 a week at his former employment. He is paid $30 a week in his present, although, of course, he is now paid for a great many weeks during most of which he has little or nothing to do. He knew nothing of distilling until two years ago. Looking after the making of the whisky is not one of the things which the defendants John H. and William H. Wight do in return for the salaries they receive. It is equally plain that they are not close and careful supervisors of the Company's bookkeeping and office administration. So much was shown by the state of the books when the audit was made, and by the fact then revealed that easily detectable defalcations to a large amount and for a considerable time had been going on under their very noses. While the accounting system of the Company was good, it does not appear that

any of the individual defendants exercise any real supervision over it. Nor do they take such precautions as would be easily in their power to keep track of the Company's expenditures. For example, the salesmen are not required to render any expense account, but are allowed to draw what they please. Under such a system, or lack of it, it is not surprising that the sums expended by the defendant Frank L. Wight, in a three weeks' trip, appear to have averaged $30 a day. Nor was I impressed with the fact that either of them were of any special value to the Company as a credit man. The Company does not sell a great many different people. Its total customers number only 175, and they do not change very frequently. Nothing in the examination of either of the defendants, or of any of the other witnesses, suggested that they had any well-organized credit system. Their apparently very capable head salesman, Mr. McCunn, and Dun and Bradstreet seemed to be their equipment in that direction.

Their office hours, to say the least, are not excessive. During the four to six months in which the distillery was shut down, Mr. John H. Wight spends from about 10 o'clock, or a little before, at the Company's office, to the neighborhood of 1:30. In other seasons of the year he stays until from 3 to 5 o'clock, perhaps on an average to 4, or something after. His only connection with running the distillery is to determine when rye should be bought and how much shall be bought. He is no judge of rye and does not pretend to be. He simply makes up his mind how much rye it is judicious to buy at a particular time, in view of the needs of the distillery, as reported to him, and the state and prospects of the market as he sees them. He gives his orders to the grain brokers to make the purchase. They buy it, and when it arrives at the distillery it is inspected by the $2,000 superintendent, and accepted or rejected, according to the latter's judgment. It is unnecessary to say, however, that though these services probably take very little time, perhaps only a very few hours in the year, the skill and judgment with which they are done may, in seasons in which the price of rye markedly fluctuates, have a very material effect upon the profit and loss account of the Company. John H. Wight's good judgment, or the favorable conditions of the market, or the combination of both, during the past season, enabled the Company to resell at a profit of over $3,700 rye which had been bought in excess of its needs.

He specifies as a part of his work the fixing of the price of the whisky. It may be doubtful whether this is either a very important or a very arduous duty. The price for many, many years was always 55 cents. Three years ago it was raised to 57½ cents, and has never since been changed. He says that he manages the finances of the Company. Such management seems to consist in borrowing from one particular bank such sums as the Company may need, and in paying therefor, year in and year out, 6 per cent. interest, neither more nor less, no matter what the state of the money market may be. He has at times used securities of his own as collateral for advances to the Company. To avoid a detailed and irritating examination into his private affairs and the state of the accounts between him and the Company at various times, it was stipulated that his assumption of per-

sonal liability should not be taken into account by the court in appraising the value of his services to the Company. Of much that one who was so closely identified with a Company as he is, who has so large a portion of his fortune invested in it, who holds the position of its president, and who is so liberally compensated for what he does for it, should seemingly know, he professes himself ignorant. In some respects, it is true, this ignorance may be more in seeming than in reality. His indignation at being subjected to an examination as to what he does to earn his salary, combined perhaps with an inability to recall promptly things he really knows, may very probably have led to his making a far worse impression on the witness stand than the actual facts justified.

Nevertheless, after making all possible allowances, it must be said that in none of the respects thus far examined are the services he renders the Company of a high order or worthy of anything more than a very moderate compensation. The real value of himself and his brother to the Company must have been in keeping it in touch with the jobbers throughout the country, who were prepared to buy an expensive and high grade whisky. Of course, it is impossible to tell how much of this in the last 15 years has been the work of their salesmen, and for how much they are entitled to credit. Somebody, at some time prior to the employment of the present salesmen, must have succeeded in making the whisky known. However easy it may be to sell it on its reputation now, there must have been a time when a reputation for it had to be made.

It is probable that at present the most important detailed work with which John H. Wight busies himself is the determination when it is prudent to buy back the Company's product from some one who has bought it, and wants to get rid of it, and the finding, of course largely with the aid of the salesmen, some one who will take it off the Company's hands. There are other questions of policy, the right decision of which may be of vital importance to the Company. Some of these may be decided in a moment; some may require long reflection. When rye is high, and the demand for whisky poor, somebody must determine whether it is expedient to shut down altogether, or whether it is advisable to run, and, if so, for how long. All these are important duties; unwisely performed, the Company may lose greatly; wisely discharged, it may profit proportionately. Seeing and hearing Mr. Wight testify, it may not be easy to imagine that his judgment on such a question would be of great value. On the other hand, the Company was until 1907 eminently successful, and its sales, although not its profits, taking one year with another, have been since well maintained and even increased.

Nevertheless, making all allowances for the effect which the witness' extreme indignation at these proceedings, his dislike and contempt for the plaintiff, and his own ineradicable subconscious conviction that how he and his brother own the Company, and what he and the Wight family get out of it, is nobody's business, have in making him appear much less intelligent and efficient than perhaps he is, the salary which he, his brother, and his son continue to vote him seems far in excess

of the reasonable value of any and all the services which he renders the Company. The total business of the Company runs from $400,000 to $600,000 a year. His services do not require the performance of any considerable amount of detail work, nor do they in fact consume a large proportion of his time, nor when his time is employed in the Company's service is the work which he is required to do apparently much of a strain on either mind or body. Compared with salaries paid in public positions, the disproportion of this compensation is immense. A Senator of the United States receives one-half as much; the Chief Justice of the United States the same; each of the Associate Justices something less. No attempt has been made to prove that the heads of like corporations are ordinarily paid for similar services any such sum as the defendant receives. The witness Mr. Marcus, who has very large experience in such matters, testifies that, if the defendant were paid from $4,000 to $6,000 a year, he would be largely overpaid.

Without going into as much detail with reference to William H. Wight's services, he would seem at $7,500 a year to be extravagantly compensated; nor do I think there is any justification whatever for employing Mr. Frank L. Wight at $4,200 a year as assistant salesman.

[1] It has been asserted on behalf of the defendants that, whatever may be the opinion of the judge in this case as to the reasonableness of the salaries which the corporation fixed for its officers, he may not interfere. The courts, it is true, cannot run the internal affairs of corporations. If a majority of the stockholders of a corporation, in a matter in which their individual pecuniary interests are not in conflict with those of their company, acting honestly and in good faith, decide that certain salaries shall be paid, or certain expenses incurred, their judgment is ordinarily final, and may not be reviewed by the courts, however unwise or mistaken the individual judge or judges who hear the case may think them to have been. On the other hand, there is no question that, the courts may interfere if salaries are fixed in conscious bad faith, with intent to despoil the minority stockholders.

[2] The question here presented is, however, different from either of those supposed. Here the officers of a corporation themselves own the majority of its stock, and constitute a majority of its board of directors. They themselves alone assumed over the protest of some of the minority stockholders to fix the value of their services, and have appropriated the Company's money to pay for them at the figure so determined. Such valuation, moreover, seems to the court to be one far above any which a disinterested man might reasonably and honestly put upon them. Under such circumstances, is the decision arrived at by these officers, when acting as judges in their own case, conclusive? It would seem that it should not be necessary to cite authorities to justify a negative answer. When the question has been squarely presented, it is believed that such answer has always been given. Jones v. Morrison, 31 Minn. 140, 16 N. W. 854; Copeland v. Johnson Manufacturing Co., 47 Hun, 235; Butts v. Wood, 38 Barb. (N. Y.) 181. Like doctrine is laid down by the text-writers. 3 Clark & Marshall on Private Corporations, p. 2062, § 672-B; 3

Cook on Corporations, 2093 et seq. § 657. It has been asserted by the courts in many cases, in some of which upon the facts it was held not applicable. Jacobson v. Brooklyn Lumber Co., 184 N. Y. 152, 76 N. E. 1075; Francis v. Brigham-Hopkins Co., 108 Md. 233, 70 Atl. 95; Hayes v. Canada, Atlantic & Plant S. S. Co., 181 Fed. 289–296, 104 C. C. A. 271; Harris v. Lemming-Harris Agricultural Works (Tenn. Ch. App.) 43 S. W. 871. Some of the courts have said that the action of officers in voting salaries to themselves was void; others, that it was good until challenged, but, when the challenge was given, the burden of showing the reasonableness of the salaries voted was upon the officer; and still others have perhaps assumed that it would be held justified until shown not to be so.

In this case it is unnecessary to inquire which is the true rule. Tested by any one of the three, the salaries complained of cannot be sustained. For the defendants it is urged that, whatever the law is as to votes raising salaries, the courts have no jurisdiction to require, at the request of a minority stockholder, the reduction of salaries which were paid before any complaint against them was made, and which have been, to the knowledge of such stockholder, paid for many years without his asking legal redress.

So far as the cases cited on either side are concerned this contention seems one of first impression. So approaching it, I do not see why the arm of the court should be tied by the circumstances relied on by the defendants. A minority stockholder might, it is true, be estopped from demanding the return of an excessive salary, the payment of which he had not seasonably sought to prevent. But it does not follow that he may not at any time interpose his protest and demand to be heard by the court as to the rightfulness of the continuance of such payments. Long delay in raising such a question may well suggest that in point of fact the salaries were not so unreasonable as upon the other evidence they may seem to be. In that connection it might, however, be borne in mind that the Company is not now rolling in the wealth which once seemed to be pouring in to it. Its expenses are now absorbing so large a proportion of its income that the minority stockholders are well within their rights in asking that the salaries of the officers and employés shall be fixed with some relation to the value of the services rendered. The corporation cannot be appealed to because its every action is dominated by the men who are receiving the salaries complained of. There was nothing in the demeanor of John H. Wight when on the witness stand to suggest that he was an exception to the time-honored rule that no man is fit to judge his own case. Years ago John H. Wight borrowed from the Company, without any formal action on the part of the board of directors, and without the knowledge of the minority stockholders, sums of money running up into many thousands of dollars. Doubtless the Company was secured against any possible loss. When the transaction was brought to the attention of the minority stockholders, his own counsel advised him that he had no right to act in that manner. That money was repaid, but so fixed is his feeling that the Company is his, that after this suit was brought, he, without the knowledge of any other officer of the Company, drew

out of its treasury, for his own use, $1,850 in excess of anything at the time possibly due him. It is true that he repaid it within a day or two after it was made a matter of comment in court. The suggestion is not that he had any dishonest intentions in his actions, but that he simply is incapable of separating the Company's interests from his own, or his own from that of the Company, and is therefore eminently disqualified to judge any question in which his interests and those of the Company are in conflict. It is not perceived how, as defendants claim, the letter of 1911 can preclude the plaintiff from now raising the salary question. He is not asking that the defendants shall be compelled to pay back any salaries received before 1911, or any salaries received before 1915, nor could anything in the letter be construed into a promise never to ask for a reduction of the salaries then being paid, no matter how greatly the financial circumstances of the Company might in the meantime change.

What has already been said is sufficient answer to the further suggestion that the purchase of additional stock in 1913 precludes the plaintiff from objecting in 1915 to the salaries now being paid, because they are the same salaries, except as to that received by Frank L. Wight, which were then paid. On the other hand, the court is not disposed to follow the lead of the plaintiff's counsel, and reduce the controverted salaries below the amounts at which, in July, plaintiff asked that they should be fixed. But to these figures they should be brought down. A salary of $3,000 per annum seems to be for the present a liberal compensation for Frank L. Wight.

A decree embodying these conclusions may be drafted.

DORRANCE v. DORRANCE et al.

(District Court, M. D. Pennsylvania. November 16, 1915.)

No. 212-A.

1. PERPETUITIES ⟹4—VESTING OF REMAINDER—RULE AGAINST PERPETUITIES.

The will of a testator made devises of real estate in trust for each of his children in the same language. Each child was given a life estate, with remainder to his or her children, or their issue. A further provision was as follows: "In case of the death of my said son without leaving him surviving any child or children, or the issue of any deceased child or children, then in trust for my other children, share and share alike, and the issue of any deceased child (said issue taking always by representation). Said net rents, profits and income to be paid to my said children for and during their respective natural lives, and upon the death of any such child his or her share of the same shall be paid to his or her children then living and the issue of any deceased child then living (such issue taking always by representation) until the arrival at majority of such child, or if more than one of the youngest of such children, and upon such arrival then in trust to convey the share of its or their parent to such child or children absolutely." *Held* that, construing the will in its entirety in the light of the testator's general intention and purpose to make an equal division between his children and their issue by representation, the words "child" and "children" should be given their plain, or-

⟹For other cases see same topic & KEY-NUMBER in all Key-Numbered Digests & Indexes

dinary meaning, by which they denoted children only, and not "issue," and that as so construed the ultimate remainder in fee vested in any event within the period of a life or lives in being and 21 years thereafter, and the will was not in violation of the rule against perpetuities.

[Ed. Note.—For other cases, see Perpetuities, Cent. Dig. §§ 4–44; Dec. Dig. ⚷4.]

2. WILLS ⚷449, 456—CONSTRUCTION—GENERAL RULES.

In construing a will, it is to be presumed that the terms were used in their plain, ordinary sense, and the whole will is to be construed in such manner as to avoid creating an intestacy, if it can be done without doing violence to the language used.

[Ed. Note.—For other cases, see Wills, Cent. Dig. §§ 965, 974; Dec. Dig. ⚷449, 456.]

In Equity. Suit by Estelle Dorrance against Benjamin F. Dorrance and others. Decree for defendants.

Sigmund Zeisler, of Chicago, Ill., and Wm. H. Earnest, of Harrisburg, Pa., for plaintiff.

John G. Johnson, of Philadelphia, Pa., for defendants.

WITMER, District Judge. [1] The plaintiff is the widow of Charles Dorrance, Jr., son of Charles Dorrance, Sr., deceased. The senior Dorrance died on the 18th day of January, 1892, first having made his last will and testament, dated October 14, 1891, duly probated and remaining of record in the office of the register of wills for Luzerne county, this state, wherein and whereby the testator has devised and bequeathed the residue of his valuable real and personal property, after the bequest of certain specific legacies, unto the Pennsylvania Company for Insurance on Lives and Granting Annuities, in trust for the use and benefit of the devisees and legatees mentioned in said will, being children, grandchildren, and issue thereof.

Since then the junior Dorrance died, intestate and without issue, leaving to survive him a widow, who contends that under the contingencies provided by the will of the senior Dorrance, deceased, intestacy has resulted, and that, by reason thereof, his entire estate belongs in equal shares to the heirs at law and next of kin of the testator. It is to recover such interest or portion of the estate of the senior Dorrance as the intestate law entitles her of the share of her husband, in the event of intestacy of the senior Dorrance, that the plaintiff has brought this bill.

The matter to be determined has to do with the several clauses of the testator's will, limiting remainders after the expiration of life estates in certain parcels of real estate devised specifically in trust to testator's five named children, and life estates in personalty bequeathed specifically to testator's five children and one grandchild.

The several clauses of the will thus limiting remainders are worded substantially alike, so that a proper interpretation of one of the clauses and the effect thereof will dispose of the whole controversy. By paragraph 7, subdivision 5, of said will, a certain parcel of real estate is devised in trust to the use and benefit of Charles Dorrance, Jr., for and during his natural life, with remainder over as follows:

"In trust to hold, manage and let all that certain farm situate in Kingston township, Luzerne county, purchased by me from the late Almon Church adjoining lands of the late James Eley and Noah Pettebone and containing about 90 acres of surface (the coal and other minerals being expressly excepted out of this devise), and to collect, recover and receive the rents, profits and income thereof and to pay over the same less expenses to my said son Charles Dorrance, Jr., for and during his natural life, or to allow him at his option to use and occupy the said farm during his natural life, the taxes, assessments and cost of repairs to be paid out of the income of the said farm; and upon the death of my said son, then upon the same trusts for any child or children and the issue of any deceased child living at his death (such issue taking always by representation) until the arrival at majority of such child, or if there be more than one, the youngest of such children, and upon such arrival then in trust to convey said farm to such child if there be but one or to such children if there be more than one as tenants in common, and in case of the death of my said son without leaving him surviving any child or children, or the issue of any deceased child or children, then in trust for my other children, share and share alike, and the issue of any deceased child (such issue taking always by representation). Said net rents, profits and income to be paid to my said children for and during their respective natural lives, and upon the death of any such child his or her share of the same shall be paid to his or her children then living and the issue of any deceased child then living (such issue taking always by representation) until the arrival at majority of such child, or if more than one of the youngest of such children, and upon such arrival then in trust to convey the share of its or their parent to such child or children absolutely, and in no event shall the said estate or the income thereof be liable in any way or manner whatsoever for any of the debts, liabilities or engagements of my said son nor to any attachment, sequestration or execution process or any proceeding in the nature thereof."

On behalf of the plaintiff, it is contended that the words "child" and "children," as shown in the above portion of the will, and as likewise used in other similar clauses, should be given a liberal and broad construction, so as to denote "issue," and that, so construed, the several provisions are void, as violative of the rule against perpetuities. It is argued that if a strict and narrow construction is given to the words "child" and "children"—or being construed literally—then they are self-contradictory, and that, furthermore, other provisions in the will indicate that the testator, by the use of the words "child" and "children," intended to denote "issue."

On behalf of defendants it is contended that the words "child" and "children" were used by the testator in their plain, ordinary sense, intending to denote "child" and "children," and not "issue," and that, so construed, there is nothing contradictory or irreconcilable in the provisions of the will. It is also practically conceded by plaintiff's counsel that, if it was the intent of the testator to use the words "child" and "children" in their literal sense, and not so as to denote "issue," then these limitations are not violative of the rule against perpetuities.

Needless to say, we are governed by the intent of the testator as ascertainable from a perusal of the whole will. Before taking up for consideration the specific clauses and provisions of the will, for the purpose of ascertaining the particular intent of the testator, we will examine the will as a whole, with a view of ascertaining the general intent and purpose—that is to say, the general scheme—of the testator as to the disposal of his property. Thus reading the will, we see that the testator intended to dispose of all his property by will; aliunde, he in-

tended to die testate as to all of his said property, real, personal, and mixed.

It also clearly appears that he intended to make provisions for all of his children, contemplating that they would all survive him, and that none of his children should take a fee simple title in any portion of his real estate (except that mentioned in subdivision 7 of paragraph 7 of the will), but that each should take a life estate in certain specified portions thereof. In other words, the testator makes specific devises of a life interest in both realty and personalty to each of his children. To his daughter, Annie A. Reynolds, wife of Cheldon Reynolds, he devises a life interest in a tract of land comprising about 200 acres, situate in the township of Lehman, county of Luzerne. To his son, Benjamin F. Dorrance, he devises a life estate in the northeasterly one-half of a tract of land, containing about 103 acres, situate in Kingston. To his son, J. Ford Dorrance, he devises a life estate in the southwesterly one-half of said tract of land, containing about 103 acres, situate in Kingston aforesaid. To his sons, Benjamin F. and J. Ford, as tenants in common, he also devises life estates in a tract containing about 100 acres, bounded by the township lines of Plymouth and Jackson. To his son, Charles Dorrance, Jr., he devises a life estate in a tract of land situate in Kingston township, Luzerne county. To his son, John Dorrance, he devises a life estate in certain real estate situate in the state of Missouri.

Likewise, with reference to the personalty in Pennsylvania, he bequeaths a life interest as to one-fifth thereof to each of his children, Annie B. Reynolds, Benjamin F. Dorrance, J. Ford Dorrance, and Charles Dorrance, Jr.; to his son, Benjamin F. Dorrance, he bequeaths a life estate as to four equal twenty-fifth parts; and to his granddaughter, Stella, daughter of said John Dorrance, he gives a life estate in a one twenty-fifth part.

With reference to the personalty in the state of Missouri, testator likewise gives a life estate unto his son, John Dorrance; but in this provision, subdivision 6 of paragraph 7, he expressly excepts his granddaughter, Stella, from the class who are to take by way of remainder, both as to personalty and realty, and likewise, by the last clause of subdivision 7 of paragraph 7 of his will, he declares that the provisions made unto his granddaughter, Stella, by the first division of paragraph 7 of said will, shall be "in exclusion of any other interest or estate which she might otherwise be entitled to as heir, or as one of the children of her father, John Dorrance."

By subdivision 7 of paragraph 7 of said will, testator provides that all of his real estate not specifically devised as aforesaid shall be taken and held by the named trustee upon the said trusts as mentioned in the bequests of personalty contained in the first subdivision of paragraph 7, except that in this instance the testator's own children were evidently intended to take a fee; the provision being, "the division shall be among my five children, share and share alike." To each of the devises and bequests so made there was annexed a spendthrift trust, and therefore an active trust.

Manifesting an intent that each of his own children shall take life estates, and life estates only, in his property, except as noted, it is also

manifest that the testator intended that his grandchildren, his "children's children," should take in fee by way of remainder, provided any were living at the death of their parents, and that the "issue" of deceased grandchildren should likewise take in fee by way of remainder, upon the decease of their ancestor, testator's child, although such grandchildren of testator and issue of deceased grandchildren were not to become entitled to possession until the youngest grandchild in each class had attained his majority. In the meantime title was to remain in the named trustee, controlled by the provisions of the active spendthrift trusts. It is to be noted that in each and every instance the remainder, whether life estate or fee, is to vest only in those persons—children, grandchildren, or more remote issue—living at the death of the testator's respective children.

Thus it will be noticed, by reference to subdivision 5 of paragraph 7 of said will, that upon the death of Charles Dorrance, Jr., leaving children to survive him, the trustee is requested to convey his portion of the estate unto said children when the youngest child attains its majority. If any child of Charles Dorrance, Jr., shall predecease him, leaving surviving issue, then such living issue of such predeceased child are entitled to participate in the distribution of said portion of the testator's estate, "such issue taking always by representation." It is further provided, however, that in case of the death of the said Charles Dorrance, Jr., "without leaving him surviving any child or children, or the issue of deceased child or children," then such share is to be distributed unto testator's other living children and issue of deceased children, "such issue always taking by representation."

Testator's child or children take life estates only in the portion of the share devised unto them. The remainders in fee as to said share are to vest in the children of testator's "then living children and the issue of testator's deceased children, then living," "such issue taking always by representation," title to be held in trust, however, until the youngest child obtains majority, whereupon the trustee is to make conveyances. This being the general intent, purpose, and scheme of the will, the ultimate remainder in fee vests in any event whatsoever within a period of a life or lives in being and 21 years thereafter.

In each clause of the will devising an estate unto testator's several children it is provided that the child shall take a life estate; upon his death the remainder in fee is to vest in such child's living children and living issue of deceased children. But, if testator's child dies without leaving surviving child or issue, then such share is to go to testator's other living children and the issue of testator's deceased children; testator's children again taking life estates only, with remainders at their decease to their living children and living issue of deceased children. The living issue of a predeceased child of testator take their portion of the share in fee.

It may be true that the testator, in providing for the contingency of a son dying without surviving children or issue of deceased children, may not have expressed his intent as clearly as he might have done, yet it seems quite certain that he intended that the living issue of predeceased children should take a fee.

Let us again note the provision of the will:

"In case of the death of my said son without leaving him surviving any child or children, or the issue of any deceased child or children, then in trust for my other children, share and share alike, and the issue of any deceased child (such issue taking always by representation)."

Thus an estate is devised in equal shares unto each of testator's living children and unto the issue of a deceased child. But as to the estates devised unto his own children the testator makes the further provision:

"Said net rents, profits and income to be paid to my said children for and during their respective natural lives, and upon the death of any such child, his or her share of the same shall be paid to his or her child or children then living, and the issue of any deceased child then living (such issue taking always by representation)," etc.

Thus the testator seems to have endeavored to make equal distribution amongst his several children and their respective issue; but he carefully provides in each instance that his own children shall take life estates only, and he manifestly intended that other takers should take in fee. He expressly provides that, in the case of a child dying without children or issue, then such child's share shall be distributed share and share alike unto his other children and the issue of any deceased child, such issue taking always by representation. The estate in fee thus devised unto the issue of a predeceased child is not cut down by the subsequent provision:

"Said net rents, profits and income to be paid to my said children for and during their respective natural lives," etc.

This provision manifestly applies only to the estate devised unto testator's other children. They take life estates, and their living children, or issue of deceased children, take in fee thereby effecting equality of distribution.

The contention of plaintiff's counsel that, unless we construe the word "children" as meaning "issue" in the clause "said net rents," etc., last quoted, then neither the corpus nor the income could go to the issue of a predeceased child of the testator, cannot be sustained. The share or corpus of the child dying without issue has already been divided and distributed to the living issue of a predeceased child, as well as to living children. It is the net rents, profits and income of the portions divided and distributed to testator's living children which are to be paid to said children for and during their respective natural lives. Thus construed, the entire will is intelligible and the several clauses thereof nonrepugnant.

The general scheme of distribution designed by the testator being thus determined, we will note the extreme care displayed in avoiding a violation of the rule against perpetuities. It is provided that each and every of the remainders in fee shall vest at the death of some one of testator's children, a life in being. And it is further provided, with caution, that the several remaindermen shall enjoy possession within 21 years thereafter, the trustee retaining title meantime, "until the arrival at majority of such child [first taker's child], or, if more than one, of the youngest of such children," etc.

That the testator knew and intended to make the distinction between the words "child," "children," and "issue" is clearly ascertainable from a further consideration of the disputed clauses of the will. The testator is endeavoring to make equality of distribution. This would be presumed, even if it were not apparent. When a child of testator dies, his share of the estate descends, not only to his living children, but to living issue of deceased children (not living children of deceased children), however remote; and when such child of testator dies without leaving issue surviving him, then his share descends to testator's other living children for life, with remainder to their issue (not children only), and issue of testator's predeceased children; not only children of a predeceased child, but all living issue, take.

It thus clearly appears that, when the testator meant to designate issue, he used the word "issue" knowingly and with intent as further appears:

"Upon the death of my said son, then upon the same trusts for any child or children and the issue of any deceased child living at his death."

"In case of the death of my said son, without leaving him surviving any child or children, or the issue of any deceased child or children, then in trust for my other children, share and share alike, and the issue of any deceased child."

"Said net rents, profits and income to be paid to my said children for and during their respective natural lives, and upon the death of any such child his or her share of the same shall be paid to his or her child or children then living, and the issue of any deceased child then living."

This language is persuasive that, when the testator used the words "child" and "children," he intended to denote such in the ordinary acceptance of the term and not issue.

The question before us is somewhat narrowed by a concession of plaintiff's counsel (properly made, as we think) to the effect that, if the word "child" in the first line of the clause "and upon the death of any such child, his or her share shall be paid to his or her children then living, and the issue of any deceased child then living," etc., is to be literally construed, then the entire provision is valid, no matter how that word may be construed in any other part of the will.

It was said by the Supreme Court of this state in considering language similarly employed, in the case of McBride's Estate, 152 Pa. 192, 25 Atl. 513:

"Testator by will four years before his death gave to a trustee a fund for the use of three children of his son, John McBride, naming them, 'and such other children lawful issue which he may have, the said sum to accumulate until the youngest surviving of these children, shall have attained the age of twenty-one years.' Held, that the words 'the youngest surviving of these children' referred to the children of John named in the will and living at the time of its execution, and that the persons entitled to the fund at the time of distribution were the children of John or their issue living when the youngest survivor of the three children mentioned in the will attained the age of 21 years. Such a construction saves the will from transgressing the act of April 18, 1853 (P. L. 503), limiting the period of a trust for accumulation to 21 years after the death of the testator."

It is only by placing a forced and strained construction upon the passage in question, and importing thereto a meaning entirely inconsis-

tent with the general scheme of the testator for the distribution of his estate, that any warrant whatsoever is found for adopting the plaintiff's construction. The argument of her counsel, that if the words "child" and "children" are literally construed then "neither the corpus nor the income is ever to go to any issue of a child of the testator, if such child shall have died before the death of the son provided for," would be logical except for the fact that it is founded upon a false premise. It erroneously assumes that the testator, in saying "net rents, profits and income," referred to the rents, profits, and income of the whole share; whereas, it is clear that he simply referred to the portions that children, not issue, took. The argument ignores, or rather flatly contradicts, the immediately preceding passage plainly expressing an intent that the issue of testator's deceased children, as well as his living children, are to share the interest of a child dying without issue.

In construing this will we need not engage in a profitless dissertation of the rules and principles applicable to vested and contingent remainders, substitutionary remainders, concurrent contingent remainders of a double aspect, executory devises, and other mysteries of the law to which attention has been called. Nor will we take time to analyze and distinguish the various decisions cited by counsel. There is no conflict in the authorities applicable, whether by state or federal courts. If the words "child" and "children" as employed in the disputed passage are to be construed as meaning "issue," then under all the authorities the provisions are invalid as violating the rule against perpetuities. And if these provisions are invalid, the whole will is of none effect, for these provisions cannot be rejected or cast aside without destroying the whole structure of the will. And this is the essential point decided by the cases of Lawrence v. Smith, 163 Ill. 149, 45 N. E. 259, Reid v. Voorhees, 216 Ill. 236, 74 N. E. 804, 3 Ann. Cas. 946, Barret v. Barrett, 255 Ill. 332, and in Re Johnston's Estate, 185 Pa. 179, 39 Atl. 879, 64 Am. St. Rep. 621.

In all of these cases, as well as in Gerber's Estate, 196 Pa. 366, 46 Atl. 497, and Kountz's Estate, 213 Pa. 390, 62 Atl. 1103, 3 L. R. A. (N. S.) 639, 5 Ann. Cas. 427, likewise cited by plaintiff's counsel, it appears that the limitations were to take effect after the expiration of a life or lives in being and 21 years thereafter, and therefore the limitations were void as violative of the rule against perpetuities.

The case of Rosengarten v. Ashton, 228 Pa. 389, 77 Atl. 562, cited by defendant's counsel and relied upon by plaintiff's counsel, is not a ruling on the doctrine of perpetuities. In that case the testator made no direct or express bequest to his grandchildren, but provided that upon the death of his last child then the trustee should pay over and distribute the trust estate unto his grandchildren and the issue of such as might be dead, "such issue to take the share the parent would have taken if living at the time of the death of my last surviving child." It was held that the direction to pay or divide constituted the bequest, and that the vesting of the interest itself was postponed until the time appointed for distribution, and that, therefore, only such issue took as were living at that time.

In the case under consideration there is, however, a direct, express devise, upon the death of a child without issue, unto other children, grandchildren, and issue of deceased children; and the estates devised vest at the death of such child provided for. The shares devised to testator's children and the issue of deceased children, though to be held in trust, nevertheless vested in interest immediately, though enjoyment of possession was postponed until the youngest child (meaning grandchild) of its class should obtain majority. In this aspect the present case does not differ materially from In re Carstensen's Estate, 196 Pa. 325, 46 Atl. 495:

"The testatrix devised and bequeathed her entire estate to her executor, in trust to convert the same into money and pay the interest and income thereof to her husband during his life. The will then provides as follows: 'And from and after the decease of my said husband, I give, devise and bequeath the whole estate then remaining to my brothers and sisters; the child or children of any of my said brothers or sisters who may then be dead to take and receive the share that his or their parent would have taken if living.' Held, that the interest of the brothers and sisters was not contingent upon their surviving the life tenant, but that it vested at the death of the testatrix, subject to be defeated only by the legatee leaving children during the life tenancy of the first taker."

[2] Construing this will as we have done, we need not exercise, nor need we interpolate, and yet give effect to each and every clause of it. If there were any doubt or uncertainty as to the meaning applied to the terms and provisions construed, we would have the benefit of two cardinal principles of construction to aid us in resolving that doubt in favor of the conclusion reached. First, it is to be presumed that the terms were used in their plain, ordinary sense; and, second, we are to construe these terms as well as the whole will in such manner as to avoid creating an intestacy, if we can do so without doing violence to the language employed. "It is to be presumed that the testator * * * intended that which was efficacious rather than that which was not" (Sharpe's Estate, 16 Phila. 403); and "a restricted meaning cannot be given" to words used in a will "where the effect would be intestacy" (Stiver's Estate, 5 Pa. Co. Ct. R. 113), are expressions illustrative of these principles. Then, again, "in all cases where the meaning of an instrument is doubtful, courts will incline to a construction which prevents the application of the rules against perpetuities of the limitations contained therein." Siddall's Estate, 180 Pa. 127, 36 Atl. 570. While the cases cited are Pennsylvania decisions, yet we take it that they do not enunciate doctrines disputed in well-adjudged cases from other jurisdictions; and therefore it is unnecessary to question the contention of plaintiff's counsel that the Pennsylvania authorities are not controlling here. In this connection, however, we may allude to the case of Barber v. Pittsburg, Ft. Wayne & Chicago Railway Co., 166 U. S. 83, 17 Sup. Ct. 488, 41 L. Ed. 825, wherein it was held:

"When the construction of certain words in deeds or wills of real estate has become a settled rule of property in a state, that construction is to be followed by the courts of the United States in determining the title to land within the state, whether between the same or * * * other parties."

Following the conclusion that the limitations in the present will are not violative of the rule against perpetuities, and that the will as a whole is valid, the plaintiff's bill is dismissed, with costs to the defendant.

FREEMAN v. JACKSON et al.

(District Court, N. D. Georgia. November 6, 1915.)

No. 25.

1. BANKS AND BANKING ⟹254—NATIONAL BANKS—ACTION BY RECEIVER TO ENFORCE LIABILITY OF DIRECTORS.

The receiver of an insolvent national bank may maintain a suit for the benefit of its creditors and stockholders to recover from its directors for losses alleged to have been sustained in various ways by reason of their illegal, fraudulent, and negligent acts in the management of its business, and such suit is cognizable in equity.

[Ed. Note.—For other cases, see Banks and Banking, Cent. Dig. §§ 950-957; Dec. Dig. ⟹254.]

2. BANKS AND BANKING ⟹254—NATIONAL BANKS—SUIT BY RECEIVER AGAINST DIRECTORS—PLEADING.

Various exceptions to a bill by the receiver of an insolvent national bank against its directors to enforce their liability for losses sustained through their negligent and fraudulent acts considered.

[Ed. Note.—For other cases, see Banks and Banking, Cent. Dig. §§ 950-957; Dec. Dig. ⟹254.]

In Equity. Suit by Lloyd R. Freeman, as receiver of the First National Bank of Lafayette, Ga., against T. A. Jackson, J. W. Cavender, S. A. Hunt, Jr., R. N. Dickerson, J. H. Hammond, M. A. McConnell, O. T. Simmons, and R. S. Garmony. On exceptions to bill, considered as motions to dismiss parts of bill. Sustained in part.

Thompson, Williams & Thompson and Sizer, Chambliss & Chambliss, all of Chattanooga, Tenn., and Shattuck & Shattuck and Rosser & Shaw, all of Lafayette, Ga., for plaintiff.

Maddox & Doyal, of Rome, Ga., and R. M. W. Glenn and Earl Jackson, both of Lafayette, Ga., for defendants.

NEWMAN, District Judge. This is a bill brought by Lloyd R. Freeman, as receiver of the First National Bank of Lafayette, against certain directors of that bank for losses sustained by the bank by reason of the negligence of the directors against whom the suit is brought, and their failure to comply with the provisions of the National Banking Act as to their duties and responsibilities. The bill contains allegations as follows:

(1) That notes already paid or renewed were carried on the books and records of the bank as "Bills Receivable," making up in that way a part of its claimed assets.

(2) That various and sundry loans were made in excess of the 10 per cent. of the unimpaired aggregate of its capital and surplus to

---

⟹For other cases see same topic & KEY-NUMBER in all Key-Numbered Digests & Indexes

certain persons, firms, and corporations contrary to the provisions of law.

(3) That after making such loans to certain persons, firms, and corporations in an amount equal or nearly equal to or in excess of the sum allowed by law, loans were made to other individuals and entered in the names of accommodation makers or indorsers, financially irresponsible, the amount of the loans to be placed to the credit of individuals, firms, or corporations whose aggregate liabilities formerly equaled or nearly equaled or exceeded the amount that could be legally loaned to them, so that their liabilities were made to exceed the 10 per cent. of the unimpaired aggregate capital and surplus of the association.

(a) That in making these loans the defendants falsified the records of said association. That this is particularly true with reference to certain loans made to John H. Hill, Shinbone Red Ore Company, and Southern Red Ore Company; these being kindred corporations. That in order to cover up such illegal and fraudulent transactions the defendants carried some of the loans in the instance of one of said parties as the original payer, and in others as indorser, but all for the purpose of deceiving the banking association. That said directors allowed S. A. Hunt, Jr., to negotiate these loans for the bank when, had they exercised ordinary care, such care as a prudent person gives to such transactions, the defendant directors could have known these things and could have prevented the same. That the proceeds of each and all of said loans were appropriated by said John H. Hill and the defendant S. A. Hunt, Jr., and other persons whose names are unknown to the plaintiff.

(4) That overdrafts were improperly, illegally, and negligently permitted by persons, firms, and corporations lacking in financial means and responsibility and lacking in assets wherewith to pay the overdrafts and who were unworthy of the credit extended to them, which overdrafts have not been paid, and as a result of which the First National Bank of Lafayette suffered large losses, the extent of which is to the plaintiff unknown. That other said overdrafts were made by persons to the plaintiff unknown, but which, when discovered, he prays may be inserted herein, with proper and apt words to charge the defendant therewith and the amount be ascertained by proper accounting herein and decreed to be paid in this action.

(5) In the twelfth paragraph it is charged that, notwithstanding the prohibition contained in the act of Congress, the First National Bank of Lafayette, through its officers and directors, the defendants herein, acted as guarantor, accommodation indorser, or surety for the Shinbone Red Ore Company, a corporation, on a certain note of $6,000, together with interest thereon, which note was indorsed by Charles Reif, John H. Hill, M. O. Grady, and S. A. Hunt, Jr., which note was charged to the account of the First National Bank of Lafayette, carried in the First National Bank of Chattanooga on January 3, 1912, and also another note of $5,000, the maker of which was the Lookout Mountain Coal & Coke Company, which matured May 12, 1910, and held for collection by the Citizens' National Bank of Chattanooga.

That these defendants permitted and allowed the First National Bank of Lafayette to become and be the accommodation indorser, guarantor, and surety for said corporations and persons without consideration, and when they knew that the corporations and the individual indorsers on said notes were lacking in assets wherewith to pay said obligations, and plaintiff avers that said notes were paid by the First National Bank of Lafayette, and that said the First National Bank of Lafayette, through its officers and directors, the defendants herein, illegally became the accommodation indorser, guarantor, and surety for various persons, firms, companies, and corporations other than those named, who are unknown to the plaintiff, but which will be shown by proof on the trial of this cause. That by reason thereof the First National Bank of Lafayette sustained large losses, the extent of which is to the plaintiff unknown, but which the plaintiff prays may be ascertained by a proper accounting herein and decreed to be paid in this action.

(6) That the said officers and directors, defendants herein, in violation of the Revised Statutes of the United States, declared and paid dividends annually when the said banking association did not have sufficient net profits with which to pay said dividends, and same were paid by defendants after the capital stock of said banking association had been impaired and its surplus exhausted. That on January 13, 1910, they declared and paid a dividend of 8 per cent. for the year 1909; and on January 11, 1911, declared and paid a dividend of 8 per cent. for the year 1910; and on January 10, 1912, declared and paid a dividend of 6 per cent. for the year 1911; and on January 14, 1913, declared and paid a dividend of 8 per cent. for the year 1912—all amounting in the aggregate to the sum of $15,000, said dividends being declared by the defendant directors in regular meetings of the board of directors, at which meetings all of the defendant directors were present. That all of said dividends so declared were paid to the stockholders of record of the First National Bank of Lafayette. That at the time of the declaration and payment of each and all of said dividends, said banking association did not have sufficient net profits or surplus out of which said dividends might lawfully have been declared and paid, but, on the contrary, the capital of said banking association had been impaired and its surplus exhausted by reason of the willful, wrongful, and negligent acts and omissions of the defendants, as set forth. That approximately one-half of the dividends so declared and paid were paid to the defendant directors, who were stockholders, which they received and appropriated to their own use. That certain of the dividends were paid to stockholders who were then or have since become insolvent, and by reason of this the bank suffered large losses, the extent of which is unknown, but which it is prayed may be ascertained by a proper accounting and decreed to be paid in this action. There are other allegations concerning this cause of action set forth to which further reference is unnecessary, as they simply strengthen the allegations with reference thereto.

(7) That in violation of the acts of Congress, said defendant officers and directors willfully misapplied and appropriated to their own

use certain moneys, funds, and credits of said banking association, and made false entries in the books, records, and statements of said banking association, with intent to injure or defraud the said banking association, its creditors and shareholders. Various allegations are then set out separately as a part of this allegation.

(8) That said directors and officers made false, deceitful, and misleading statements and representations, orally and in writing in the books and records of said banking association, and in published reports in newspapers, and in various ways in order to deceive, and did deceive, said banking association, its shareholders and creditors, and setting out certain separate and distinct transactions of the kind referred to.

(9) That the national banking laws were violated and their common-law duties to diligently safeguard and protect the funds of said banking association ignored, in that they and each of them, from the very time of their election as directors of the banking association, borrowed large sums of money from it for their individual uses, without having been directed or authorized by a resolution of their body. Then a list of those instances are set out, and it is further alleged that the defendants J. W. Cavender and T. A. Jackson well knew that these loans were being made, or by the exercise of reasonable and ordinary care could have known, yet, notwithstanding the said Cavender and Jackson permitted said officers to withdraw funds from the banking association and the banking association suffered losses as stated.

(10) That the defendants, as directors of said banking association, were required at all times to have on hand, in lawful money of the United States, an amount equal to at least 15 per centum of the aggregate amount of deposits, and, whenever the lawful money of said banking association came below 15 per centum of deposits, they were prohibited from increasing the liabilities of said banking association by making new loans or discounts, otherwise than by discounting or purchasing bills of exchange payable at sight, and they were prohibited from declaring or paying any dividend out of the profits of said association until the required proportion between the aggregate amount of its outstanding notes of circulation and deposits and its lawful money had been restored; but, notwithstanding this, the defendants violated this statute, in that they wholly failed to have on hand, in lawful money of the United States, an amount equal to 15 per centum of the aggregate amount of its deposits. And further, after being charged with knowledge that the amount of lawful money was below 15 per centum of its deposits, they unlawfully increased the liabilities of the bank by making new loans.

(11) That by section 5191 of the Revised Statutes of the United States (Comp. St. 1913, § 9746) the defendants, as directors of said banking association, were required to keep a reserve for such association equal to 15 per centum of its deposits, and it is provided in section 5192 of said statutes (Comp. St. 1913, § 9747) that three-fifths of this reserve may consist of balances due the bank from banks designated by the Comptroller of the Currency in any of the reserve

cities, the other two-fifths to be in said bank; and it is averred that the defendants and each of them knowingly violated this statute, in that they failed to have and provide in places designated a reserve equal to 15 per centum of the deposits of said banking association at all times between January, 1910, and the closing of the bank in 1913. There are further allegations in connection with this special claim which will not be reiterated.

(12) That the defendants, as officers and directors of the First National Bank of Lafayette, were required at all times to keep in the treasury of the United States a sum equal to 5 per cent. of the circulation of said bank, this 5 per cent. fund to be carried as reserve on deposits; but, notwithstanding such requirement, the defendant directors and officers failed to keep said sum at all times with said treasurer. That the officers of the Treasury Department called the attention of defendants to the willful violation of said statutes, as shown in the correspondence between said department and the defendants herein; and that by reason thereof the banking association suffered large losses.

This last charge is contained in paragraph 19 of the bill. I do not think this allegation is sufficient, and unless it is amended and made sufficient it should be stricken out.

(13) It is next charged that the defendants allowed certain slips for moneys withdrawn to be kept in a certain receptacle at the bank and to be treated as cash items, and that by this means the bank was injured. It is then alleged that the amount of loss by reason of these cash items carried on slips of paper is unknown, but will be shown by proof.

I think this should be amended in some way, as it shows on its face only a bad method of doing business without any financial loss. If it is amended so as to show to what extent this was done and the loss sustained by reason of such method of doing business, it would be satisfactory.

(14) The next charge is the manner in which S. A. Hunt, Jr., was allowed to transact the business of the bank as cashier, that he was engaged in speculation and was regarded as a promotor, in connection with one John H. Hill and other persons, in dealing in mining properties, and that the directors at various times had notice concerning Hunt's unfitness for the position of cashier, and that they were placed on actual notice by and through correspondence with the Comptroller's office and said banking association and with defendant directors, which correspondence shows that defendant Hunt was wholly incompetent for his position and that he habitually and knowingly violated the banking laws.

This allegation might be important in connection with other allegations made in this suit, but of itself it shows no particular loss in this way.

(15) That the by-laws of the bank, which were adopted by the board of directors at its regular meeting on April 8, 1904, and which were in full force and effect continuously until the closing of the bank, contained the following provisions:

"8. All loans made by his bank, except those mentioned in by-laws Nos. 9, 11 and ———, must be by the written consent of the majority of the board of directors, to the cashier, and in no case upon one's credit, but upon good and sufficient security.

"9. The cashier may make loans up to $100.00 but the aggregate of such loans to any individual or firm shall not exceed that amount.

"10. The financial agent may make demand loans whenever the funds of this bank exceed the home requirement."

That notwithstanding the plain and unambiguous provisions of said by-laws, Hunt was allowed continually to violate the same, by reason of which the banking association, its creditors and shareholders, suffered large losses, as fully set forth in Exhibit B filed with the complaint, and also other losses to the plaintiff unknown but which it is prayed may be ascertained, etc.

(16) That by various sections of the Revised Statutes relating to National Banks, the Comptroller of the Currency is charged with the duty of generally supervising the affairs of national banks, and that in pursuance of such duties the Comptroller of the Currency did, at various times, address communications to the First National Bank of Lafayette and to its president and its directors, relating to its reserve funds, excessive loans, and other matters set forth in the complaint. It is said that by the failure of the defendants to heed such warnings and admonitions by the Comptroller, the bank suffered large losses.

(17) That by reason of the insolvency of the association and the large losses sustained, the Comptroller of the Currency has levied an assessment of 75 per cent. against the shareholders of the association, which has been in part collected and is now being collected, and that when this assessment is collected in full the association will still be unable to meet all of its liabilities; that the assets of the association have been sold in part, and the plaintiff is proceeding with the liquidation and disposition of the other assets and the final liquidation of the association, but that when the liquidation has been finally completed said banking association will be unable to meet its obligations and will still be insolvent.

(18) That by reason of the matters hereinbefore set forth and of other matters and other losses which are to the plaintiff unknown, but which when discovered the plaintiff prays may be inserted herein with proper and apt words to charge the defendants with liability therefor, the First National Bank of Lafayette, its creditors and shareholders, have suffered loss in excess of $50,000, the precise extent of which is to the plaintiff unknown, but which he prays may be ascertained and decreed to be paid in this action.

(19) That the directors of said banking association could have discovered, by the most cursory examination of its books, that the loans referred to as being in excess of one-tenth part of the unimpaired aggregate capital and surplus were in fact excessive loans, and that loans alleged herein to have been made upon accommodation paper were in fact accommodation loans, and could have ascertained and discovered, by inquiry in the community where they lived and conducted their business, that the persons and companies to whom loans were made, and who are herein alleged to have been financially irresponsible, were

in fact irresponsible and without assets wherewith to pay said loans, and could have discovered, at the time of the declaration of dividends herein set forth, that the banking association had not earned profits from which dividends were properly payable, and by such examination could and would have discovered that the banking association was holding and carrying many loans upon which interest remained unpaid for a period of six months and which were not secured or in process of collection, and that interest upon other loans of large amounts was being paid by discounting new notes and merely adding the interest in the notes, and by making such examination they would have discovered all the wrongful and negligent acts in relation to the operation of said bank hereinbefore set forth. But that said directors failed and neglected to make such examination, and as a result of such carelessness and negligence on their part the said banking association suffered large losses, the exact amount of which is to the plaintiff unknown, etc.

(20) That all of the acts herein set out were unknown to the Comptroller of the Currency, to the creditors and shareholders of said banking association, and to the receiver herein, until the closing of the bank on July 19, 1913, when for the first time they were discovered by any of said parties. That said defendants, and each of them, concealed said wrongful, negligent, and fraudulent acts and conduct aforesaid from said banking association, its creditors and shareholders.

The prayers are that an account be taken and stated, and an investigation made under the direction of the court:

(1) Of all losses, including interest at the legal rate, sustained by the First National Bank of Lafayette, its creditors and shareholders, otherwise than in the usual and ordinary course of business.

(2) Of all losses by reason of lending sums of money to persons, firms, or corporations in excess of the amount specified by law, by reason of carrying on the books and records of the bank duplicate notes, and by the unlawful withdrawal of amounts from the treasury by said banking association, and that said defendants, or such of them as may be found to be responsible for such losses, when the extent thereof shall be ascertained, may be decreed to pay the said losses to the plaintiff for the benefit of the said banking association, its creditors and shareholders.

(3) As to all losses sustained by reason of lending money to persons, firms, or corporations lacking in financial means and responsibility, and lacking in assets wherewith to pay said loans, and that the defendants, or such of them as shall be found to be responsible therefor, when the extent thereof shall be ascertained, may be decreed to pay the same to the plaintiff for the benefit of the banking association, its creditors and shareholders.

(4) As to all losses sustained by reason of overdrafts in excess of deposits existing therein by persons, firms, and corporations lacking in financial means and responsibility, and the same prayer as to the payment thereof to plaintiff.

(5) As to all losses sustained by reason of improper and illegal indorsement of accommodation bills of exchange, notes, etc., with the same prayer as to payment to plaintiff.

(6) As to all losses sustained by reason of the improper declaration and payment of dividends upon the capital stock of said bank in the absence of any net profits or surplus out of which said dividends might lawfully have been declared and paid, with the same prayer as to payment thereof to the plaintiff.

(7) As to all losses sustained by reason of the illegal acts and violations of the National Bank Act permitted or committed by the defendants hereto and by reason of violations of the by-laws, and of the negligence of defendants in the discharge of their duties as officers and directors and the lack of reasonable care, prudence, and diligence in the premises, with the same prayer as to payment to plaintiff.

(8) As to all losses sustained by reason of the negligence and wrongful acts of the defendants in retaining in office, as cashier, the defendant S. A. Hunt, Jr., after the said directors knew, or should have known in the exercise of ordinary care and prudence, that he was unfit for and incompetent to hold said office, and by reason of permitting said S. A. Hunt, Jr., to participate in any way in the management of the affairs of said bank and in the investment of its funds, with the same prayer as to payment to plaintiff.

(10) For such other, further, additional, and general relief in the premises as may be just and equitable. And

(11) For subpœna, etc.

To this bill the defendants file what they call "Exceptions," but which, I presume, may be considered as a motion to dismiss the bill, or parts of it, for the reasons stated.

[1] The first exception is:

"That a court of equity has no jurisdiction over the matter and things alleged in the bill of complaint, the plaintiff having adequate remedy at law."

I do not think so. I think this case is cognizable in equity.

[2] Second:

"That the averments of said bill of complaint are insufficient, either in law or in equity, to authorize the granting of the relief prayed for."

I do not think so. I think the causes of action set forth in most of the items are sufficiently stated and well stated.

Third:

"That the receiver in this case has no legal or equitable right to sue for the benefit of stockholders."

This objection to the bill is insufficient also, and cannot be sustained.

Fourth:

"That the defendants are not liable, under the provisions of common law, on account of any of the matters or things alleged in the bill of complaint."

It is sufficient in reference to this to quote a paragraph from the decision of the Supreme Court of the United States in Yates v. Jones National Bank, 206 U. S. 158, 180, 27 Sup. Ct. 638, 645 (51 L. Ed. 1002) as follows:

"Of course, in what has been said we have confined ourselves to the precise question arising for decision, and therefore must not be understood as ex-

pressing an opinion as to whether and to what extent directors of national banks may be civilly liable by the principles of common law for purely voluntary statements made to individuals or the public, embodying false representations as to the financial condition of the bank, by which one who has rightfully relied upon such representation has been damaged. And because we have applied in this case, to the duty expressly imposed by the statute, the standard of conduct established therein, we must not be considered as expressing an opinion upon the correctness of the views enunciated by the court below concerning the standard which should be applied solely under the principles of the common law, to fix the civil liabilities of directors in an action of deceit. See Briggs v. Spaulding, 141 U. S. 132 [11 Sup. Ct. 924, 35 L. Ed. 662]."

This case in its various aspects may well be considered in the light of this decision of the Supreme Court and the rule therein stated applied.

Fifth:

"That the liability of these defendants, on account of the matters and things set out in the bill of complaint, is limited by the provisions of the National Banking Acts to damages sustained by reason of violations of said National Banking Acts, knowingly made by them or knowingly permitted to be made by any of the officers, agents or servants of the banking association."

This may be disposed of as was the fourth, above.

Sixth:

"That the averments of the bill are too general, indefinite, vague, and uncertain, and set forth no issuable facts, particularly with reference to the alleged acts of negligence on the part of these defendants or either of them, and the losses alleged to have been sustained by reason of such alleged acts of negligence, on the part of these defendants or either of them."

This objection is overruled.

Seventh:

"That the averments of the bill are insufficient, in that they fail to set up the knowledge of the defendants, and each of them separately, as to each of the respective matters and things alleged to have occasioned the loss complained of, and particularly with reference to the matters and things set out in paragraphs 7 to 20, inclusive."

I think the bill is ample in this respect, and this objection is overruled.

Eighth:

"That the averments of the bill and of each and every paragraph thereof separately are insufficient and indefinite as to the loss sustained on account of any of the matters and things set out in said bill of complaint, and, in the absence of definite and certain averments as to losses occasioned by such matters and things, no recovery can be had against these defendants or any of them, and only the United States, or its public officials, could take advantage of such alleged violations of the National Banking Acts in proceedings to forfeit the charter of said banking association or to have a receiver appointed on account thereof; and especially is this true with reference to the matters and things set out and complained of in paragraphs 7, 8, 9, 10, 11, 12, 13, 15, 16, 17, 18, 19, 20, and 23 of the bill of complaint."

I think this objection is well taken as to some of the paragraphs in the bill, and these paragraphs have been referred to above. Unless they are amended they will be held insufficient and stricken.

Ninth:

"That no list of stockholders for whose benefit this suit is filed, and an accounting asked, is set out in the bill."

This objection is overruled.

Tenth:

"That the accounting prayed for in the bill of complaint can only be had at the instance of such stockholders as ask for such an accounting, and the recovery, if any, would be limited to the amount of damages sustained by each of them respectively."

This objection is overruled.

Eleventh:

"That no statement of the financial affairs of said banking association is set out in said bill of complaint, from which it can be determined whether or not said banking association is really insolvent and whether or not a recovery against these defendants in this suit is necessary for the benefit of the creditors of said banking association."

It is alleged in the bill, as I understand it, that, even if the assessment levied by the Comptroller is collected and the amount sued for collected and added to it, it would not be sufficient to pay the liabilities of the bank. I think this is sufficient.

Twelfth:

"That a receiver cannot recover, in this case, for the benefit of stockholders, anything on account of the alleged illegal declaration and payment of dividends, for the reason that said stockholders are estopped by reason of having received said dividends."

This makes a difficult question, of course, and one of the most troublesome matters in the case. Still, I think, upon a proper accounting this can be adjusted in such way as to work no injustice to any one.

Thirteenth:

"That no list of creditors and depositors of said banking institution is set out in said bill of complaint, and it is not alleged when the indebtedness of said creditors was incurred or the deposits were made, for the payment of which a recovery is sought in this case, nor is it alleged the amount of such indebtedness or deposits as a whole, nor is it alleged the respective amounts of such indebtedness or deposits due and owing to said alleged creditors and depositors, either at the time of the closing of said bank or at the time of the filing of this bill of complaint."

I think the bill is sufficient as it stands, with the exceptions I have heretofore noted.

As to the objection in the answer, on the ground of nonjoinder of certain parties, I think the plaintiff has set out such directors as seem to me liable for the particular acts of which he complains. I think, applying the rule which I understand to be laid down in Briggs v. Spaulding, 141 U. S. 132, 11 Sup. Ct. 924, 35 L. Ed. 662, the directors against whom the charges are made in the bill are made defendants herein. The motion to strike, if it be a motion of that sort on this ground, is overruled.

The result of the foregoing is that the exceptions to the bill, which are considered, as I have stated, as grounds of a motion to strike the

whole or certain parts of the bill, are overruled with the exception of the two matters referred to, wherein I think they are entirely insufficient and should be amended or stricken.

As an answer to the bill is filed, I suppose the case will be in condition, when an order in line with the above is entered, for reference to a master, and this should be made at once and the case speeded as much as possible, as there has already been considerable delay owing to the pressing condition of business in the court.

An order may be taken in accordance with what has been said as to these exceptions or motions to dismiss.

CURTIS v. WALPOLE TIRE & RUBBER CO.

(District Court, D. Massachusetts. August 7, 1914. On Motion to Dismiss Claim, July 7, 1915.)

No. 472.

1. CORPORATIONS ⟹559—INSOLVENCY AND RECEIVERS—PROVABLE CLAIMS—DAMAGES FOR BREACH OF CONTRACT.

   Where with its consent receivers were appointed for a corporation, who refused to adopt executory contracts made by the corporation for the purchase of merchandise, the receivership operated as a repudiation and anticipatory breach of the contracts, which entitles the other parties to prove their claims for damages for the breach against the receivership estate.

   [Ed. Note.—For other cases, see Corporations, Cent. Dig. §§ 2241-2252, 2259; Dec. Dig. ⟹559.]

2. CORPORATIONS ⟹565—INSOLVENCY AND RECEIVERS—PROVABLE CLAIMS.

   In the settlement of the estate of an insolvent corporation, the fact that a creditor relies on two separate contracts, which cover what is in substance the same debt, as upon an indorsement of a note and a later assumption of the note by the insolvent, does not entitle him to prove and receive dividends on both.

   [Ed. Note.—For other cases, see Corporations, Cent. Dig. §§ 2281, 2282; Dec. Dig. ⟹565.]

In Equity. Suit by Rensselaer L. Curtis against the Walpole Tire & Rubber Company. On receivers' motion to dismiss petition by Coal & Iron National Bank for allowance of claim, filed June 12, 1915. Motion sustained.

Robert C. Morris, of New York City, for plaintiff.

Lee M. Friedman, Percy A. Atherton, and Friedman & Atherton, all of Boston, Mass., for receivers.

Curtis G. Metzler, of Boston, Mass., for defendant.

Warren, Garfield, Whiteside & Lamson, of Boston, Mass., for Coal & Iron Nat. Bank.

Morris & Plante and Guthrie B. Plante, all of New York City, for claimants.

DODGE, Circuit Judge. These claims are dealt with in the fourth report, filed June 25, 1914, of the special master appointed by the order

entered in this case on January 9, 1914, to hear the parties and their evidence and report thereon to the court.

According to the report there was due from the Walpole Company on August 2, 1913, the date of the receivers' appointment, on open accounts and notes—to Meyer & Co., $8,077.88; to Brighton Mills, $510.-25; and to Charles T. Wilson, $28,015.57. No exceptions have been taken to these findings, and no objections being now raised by the receivers, or by any of the parties, the claims of these three creditors are allowed in the amounts above stated.

[1] According to the report there was also due for breach of contract, from the Walpole Company, on the same date, to Meyer & Co., the further sum of $8,697.96, to Brighton Mills the further sum of $1,051.-35, to Charles T. Wilson the further sum of $7,229.62, and to R. J. Caldwell Company, Incorporated, the sum of $1,700. Upon these findings the receivers object to the allowance of the above, or of any, amounts, contending that damages for breach of the contracts referred to are not allowable in these proceedings as matter of law.

The facts regarding the contracts in question are the same in the case of each of the four claimants above named, and are found by the master as follows:

"It appeared from the evidence that in each of the foregoing claims there was, at the time the receivers were appointed, an existing contract between the claimant and the Walpole Tire & Rubber Company. The contract was, in substance, that the Walpole Tire & Rubber Company would purchase from the claimant certain specified merchandise in definite quantities and at stated times, and at a price fixed by the contract. In each instance the contract was an executory one, in part at least, when the receivers were appointed.

"The receivers, in the exercise of their discretion, notified the claimants that they should decline to assume the contract, and in each case the claimant treated the contract as broken and has claimed damages for the breach."

In each of the above cases the creditor's contract was of such a character that if, in the absence of any receivership, the company had disenabled itself from performance and repudiated its own obligations under the contract on the day the receivers were appointed, the creditor might at once have maintained a suit against it wherein damages for the breach could have been assessed and recovered.

If there had been bankruptcy, therefore, instead of this receivership, the trustee not electing to adopt the contract, each of the above creditors would have had the right to treat the bankruptcy as the equivalent of disenablement and repudiation on the company's part—in other words, as an anticipatory breach of the contract of the company—and, having so treated it, to prove for his damages sustained by reason of it. Such is the rule now well settled and regularly applied in this circuit. In re Swift, 112 Fed. 315, 50 C. C. A. 264, decided by the Court of Appeals in 1901; In re Pettingill & Co., 137 Fed. 144, in this court (1905); Pratt v. Auto, etc., Co., 196 Fed. 495, 116 C. C. A. 261, in the Court of Appeals (1912).

It will not be contended that this is a case of the appointment of receivers of an objecting corporation, or that the appointment did not in fact prevent performance of the contracts here in question. It therefore affected the contracts (the receivers not adopting them) just as the

company's bankruptcy would have affected them; in other words, it was the equivalent of repudiation or disenablement on the company's part. Pennsylvania, etc., Co. v. New York, etc., Co., 198 Fed. 721, 743, 117 C. C. A. 503. The case is not one in which it can be said, as in Malcomson v. Wappoo Mills (C. C.) 88 Fed. 680, or In re Inman, etc., Co., 175 Fed. 312, that the prevention of performance was the act of the law, not of the insolvent or bankrupt. Both these decisions were based upon People v. Globe Ins. Co., 91 N. Y. 174, in which the receiver's appointment was at the instance of the state and for the purpose of dissolving the corporation and winding up its affairs.

The master was therefore right, upon the facts found by him, in allowing the above claims for damages for breach of the contracts in question. It is understood that in each case the creditor had the specific merchandise contracted for and was ready to deliver it.

It is urged on behalf of the receivers that the damage claims allowed are such in character that they ought not, in equity, to be allowed to share in the assets until the general creditors are fully paid. Wells v. Hartford Manilla Co., 76 Conn. 27, 55 Atl. 599, is the authority mainly relied on. In that case, as here, the vendor had the undelivered merchandise ready to deliver at the time of the receiver's appointment, but the receiver declined to take it. An alleged repudiation by the insolvent company just before its receivership was found by the court not to have constituted a breach of the contract. Treating it as broken by the receiver's refusal to adopt, the court was of opinion that the receiver had the privilege to elect whether to adopt it or not, "without at least subjecting the fund required for the satisfaction of existing claims of creditors to a charge for damages." 76 Conn. 39, 55 Atl. 603. The claim was therefore treated as accruing subsequently to the receiver's appointment, and as one which, being for "profits which the future, by reason of a good bargain, might have in store," should be postponed to claims existing when the appointment was made. 76 Conn. 41, 55 Atl. 604.

But if I am right in holding that these creditors were entitled to treat the appointment of the receivers as in itself a breach of their contracts, for the reasons above given, it follows that their claims for damages came into existence simultaneously with the appointment and are to be regarded as then existing. That the receivers might nevertheless have required performance and taken the goods is immaterial, after their failure to exercise the right. If the creditors had provided themselves with the goods in reliance upon their contracts, there is nothing in the facts found which shows that their loss by reason of the company's failure to take and pay for them was merely the loss of a speculative profit. Damages to them occasioned by the loss of their contracts, so far as ascertainable by recognized methods of computation, are allowable claims in such proceedings as these, and in damages so ascertainable are included gains prevented, when fairly shown. Penna., etc., Co. v. New York, etc., Co., 198 Fed. 721, 739, 740, 117 C. C. A. 503. The difference between the contract price and the market price, as fixed by a sale in consequence of the purchaser's refusal to receive, is recognized as the proper measure of damages in cases such as this. Kingman v.

Western Mfg. Co., 92 Fed. 486, 490, 34 C. C. A. 489; River, etc., Co., v. Atlantic Mills (C. C.) 155 Fed. 466, 473. I am unable to find any sufficient ground for denying to a claim for such damages, so ascertained, equal rank, for the purposes of the distribution to be made, with other allowable claims not entitled to priority.

The total allowances made by the special master are therefore approved and confirmed, including the amounts allowed as due for breach of contract, viz.:

John H. Meyer & Co.	$16,755 64
Brighton Mills	1,561 60
Charles T. Wilson	35,245 19
R. J. Caldwell, Incorporated	1,700 00

On Motion to Dismiss Claim of Coal & Iron National Bank.

[2] Under the order for proof of creditors' claims herein, entered August 23, 1913, whereby claims presented were required to be made up as of August 2, 1913, the date of the filing of the original bill in the case, this bank presented a proof of claim, sworn to September 21, 1914, the allegations whereof were in substance:

That the defendant (hereinafter called Walpole Company) was indebted to the bank in the sum of $6,189.25.

That the consideration of the debt was a promissory note, dated May 3, 1913, for $7,500, with interest at 6 per cent. signed by the Massachusetts Chemical Company and indorsed by the Walpole Company.

That the amount due thereon August 2, 1913, less payments on account, was $6,189.25.

That the Walpole Company was liable to the bank, both by reason of its indorsement of said note, and in addition thereto "by reason of the assumption by said Walpole Company of the liabilities of said Massachusetts Chemical Company."

That the bank did not waive, but expressly reserved, all rights it might have to object to or avoid the transfer of the assets of said Chemical Company to the Walpole Company as a transfer in fraud of creditors.

The note referred to was annexed to the proof of claim. It was payable on demand. It bore the indorsement of the Walpole Company, by A. T. Baldwin, its then treasurer, and of A. T. Baldwin. It was a collateral note, but no question relating to the collateral deposited has been raised. A notary's certificate attached shows that the note was protested for nonpayment August 13, 1914, and due notice given the maker and indorsers on the same date.

The claim thus presented, being disputed, was referred to the special master. His report, filed October 24, 1914, sets forth an agreement by the parties before him that "a proof against the maker of the note may be allowed in the sum of $6,189.25," and that "the claim by reason of the indorsement of the note, if any, is suspended without prejudice"; also that "the amount of dividends paid on the claim is to be a payment pro tanto against the judgment recovered in the superior court for Norfolk county in the suit of said bank against the Massachusetts Chemical Company." The master reported this stipulation with his approval. After due hearing on his report, the court entered an order October 24, 1914, confirming and approving it, and allowing the claim for the sum of $6,189.25.

The present petition, filed June 12, 1915, recites the filing of the above claim, refers to the above order of October 24, 1914, and alleges that, "unless said suspended claim is taken up for determination," it is possible that the bank will receive in dividends less than $6,189.25, and that the claim against the indorser of the note should be allowed to the extent necessary for the bank to receive in dividends the full amount of its claim. Revocation of the decree suspending said claim against the indorser on the note is asked, and allowance of said claim so far as necessary to enable the bank to receive in dividends the full amount of its claim of $6,189.25.

The receivers moved on June 14, 1915, to dismiss the petition, on the ground that nothing set forth therein entitles the bank to the relief asked, or to any additional proof of claim.

It was stipulated at the hearing on the motion that on June 2, 1913, the Walpole Company "took over all the assets" and "assumed the liabilities" of the Massachusetts Chemical Company. This stipulation was made without prejudice to the rights of this bank, or the creditors' committee, "to contend that said transfer was illegal."

Whatever rights may have been reserved by the bank or by any creditor of the Chemical Company to attack the validity of the transfer here referred to, there has been no application to this court to separate or withdraw the assets then transferred, or the proceeds thereof, from the fund held by the receivers in this case and being administered in these proceedings. The transfer, as has appeared, had been made two months before the bill in this case was filed, and was made upon the simultaneous assumption by the Walpole Company of all the Chemical Company's liabilities. The receivers took and have retained control of all the transferred assets in the Walpole Company's hands on August 2, 1913, together with all its other assets. All these assets have since been treated, without distinction, as subject to the decree then made and to all orders and decrees subsequently made in these proceedings. Creditors, whether of the one or of the other concern, have alike presented their claims under the order of August 23, 1913, and all such claims appearing to have been due by either concern on August 2, 1913, have been allowed as debts of the Walpole Company, entitled to share in any distribution of the total fund under administration.

Among the claims thus presented by creditors of the Chemical Company was the claim of this bank upon this note, allowed as above on October 24, 1914, for the total amount due August 2, 1913, from the maker. The claim can therefore stand no differently, for the purposes of the present question, than if the Walpole Company had been itself the maker of the note. The bank must be regarded as accepting the Walpole Company's assumption of the original maker's liability as valid; otherwise, it cannot justly be admitted to share, in virtue of that liability, in assets which, if distributed, are to be distributed as assets of that concern only, and among those only who are entitled to rank as its creditors. Should the bank (as it has not heretofore done) take any steps in these proceedings looking toward a separate disposal or administration of assets taken over from the Chemical Com-

pany on June 2, 1913, for the separate benefit of creditors of that concern, reconsideration and disallowance of its claim allowed October 24, 1914, might become necessary. No ground appears, and none has been suggested, for supposing that the Walpole Company's assumption of the Chemical Company's liabilities on June 2, 1913, has made those liabilities its liabilities, independently of the concomitant transfer to it of the latter concern's assets.

The judgment obtained in the state court by the bank against the Chemical Company, referred to in the above quotation from the special master's report, and an alleged attachment of the Chemical Company's property in that suit, are considered in an opinion this day filed relating to another petition herein by the bank. Further reference to them is unnecessary for the purposes of the present question.

If the assets in the receivers' hands are subject as above, in the bank's favor, to the liability of the Walpole Company in place of the original maker, for what was due on the note August 2, 1913, the necessary conclusion in view of all the above is, in my opinion, that the same assets are not also subject to a further liability for what was so due on the note by reason of the Walpole Company's indorsement thereof. To allow such a further claim against them would be to permit the bank to get two dividends in respect of what is in substance the same debt. In the settlement of insolvent estates, the fact that a creditor relies on two separate contracts does not entitle him to an advantage of this kind over other creditors. Lowell, Bankruptcy, § 201; Remington, Bankruptcy (2d Ed.) §§ 753, 1520. First Nat. Bank v. Eason, 149 Fed. 204, 79 C. C. A. 162; Hitner v. Diamond, etc., Co. (C. C.) 176 Fed. 384, 399, 400.

The bank, therefore, having obtained allowance of its claim for the full amount due it on the note against the Walpole Company's assets, including those which came to it by virtue of the transaction on June 2, 1913, from the Massachusetts Chemical Company, has no right to the allowance also of its so-called "suspended" claim against the same assets, and its petition must be dismissed.

GILDNER v. HALL.

(District Court, D. Oregon. October 25, 1915.)

No. 6868.

1. PUBLIC LANDS ⟹111—"PROTEST"—RIGHT TO PATENT—CONSTRUCTION OF STATUTE.

Under Act March 3, 1891, c. 561, § 7, 26 Stat. 1098 (Comp. St. 1913, § 5113), providing that after the lapse of two years from the date of the issuance of the receiver's receipt upon the final entry of any tract of land under the homestead, etc., laws, "and when there shall be no pending contest or protest against the validity of such entry, the entryman shall be entitled to a patent * * * and the same shall be issued to him," a "protest," within the meaning of the act, must allege issuable facts which, if true, would defeat the entry, and a mere report of an agent of the Department that he had information that an entry was not in good faith, and that there was a general rumor that the law had not been complied with, and requesting that no patent issue, not followed by any proceeding, does not authorize the refusal to issue a patent after the expiration of the two years.

[Ed. Note.—For other cases, see Public Lands, Cent. Dig. § 310; Dec. Dig. ⟹111.

For other definitions, see Words and Phrases, First and Second Series, Protest.]

2. PUBLIC LANDS ⟹125—ESTABLISHMENT OF TRUST—JURISDICTION OF COURTS.

After the title to public land has passed from the government, the jurisdiction of a court of equity may be invoked to determine if the patentee holds it in trust for another, and if it appears that the party claiming the equity had established his right to the land under a true construction of the acts of Congress, but that by an erroneous construction the patent has issued to another, the court will correct the mistake.

[Ed. Note.—For other cases, see Public Lands, Cent. Dig. § 341; Dec. Dig. ⟹125.]

In Equity. Suit by B. Gildner against Amy E. Hall. Decree for complainant.

Veazie, McCourt & Veazie, of Portland, Or., for complainant.

Walter H. Evans and Arthur A. Murphy, both of Portland, Or., for defendant.

BEAN, District Judge. This is a suit to charge the holder of the legal title of real estate under a patent from the United States as trustee for the complainant. The land in controversy is situate in what was formerly the Siletz Indian reservation. The facts as they appear from the complaint are that on September 25, 1900, one Haynes entered the land under the homestead law. On March 3, 1902, he made final commutation proof of residence and cultivation, which proof was accepted as sufficient by the Land Department, and on March 7, 1902, a receiver's final receipt was issued to him. Patent was withheld, however, and on July 10, 1908, Haynes' entry was contested by one Chandler. The entryman moved to dismiss the contest and for the issuance of patent to him, on the ground that under the proviso of section 7 of the act of

Congress of March 3, 1891 (26 Stat. 1095), he was entitled to his patent, and the Department was without jurisdiction to entertain the contest. The objection was overruled and the entry subsequently canceled. Thereafter the defendant, Hall, made entry on the land and received a patent therefor.

[1] The complainant now claims that the Land Department erred, as a matter of law, in holding that it had jurisdiction to entertain the Chandler contest and in canceling his entry and awarding the title to another. The act of March 3, 1891, provides:

"That after the lapse of two years from the date of the issuance of the receiver's receipt upon the final entry of any tract of land under the homestead * * * laws," etc., "when there shall be no pending contest or protest against the validity of such entry, the entryman shall be entitled to a patent conveying the land by him entered, and the same shall be issued to him."

Under this law Haynes' right to a patent accrued and became absolute on March 7, 1904, unless there was at that time a valid pending contest or protest against the validity of his entry. In the absence of such a contest or protest, the jurisdiction of the Land Department became functus officio, save for the ministerial act of executing and delivering the patent. The Land Department ruled, however, that it had jurisdiction to entertain the Chandler contest, more than six years after the receiver's final receipt had been issued to the entryman, because, on November 4, 1903, Special Agent Hobbs, who had been directed to make an investigation of all entries within the former Siletz reservation, telegraphed the Commissioner of the General Land Office, requesting that no patents be issued for land within such area, and on November 7th of the same year made a written report, sending a list of entries, and stating that Haynes had mortgaged his land on March 6, 1902; that he (the agent) had reliable information that said entry and others were not made in good faith, but were made in the interest of other parties; that it was the general rumor that the entrymen mentioned in the list never complied with the homestead law; that he (the agent) requested that no patents issue pending further investigation.

I think the court is justified, from its knowledge of the general practice of the Land Department, in assuming that the report of Hobbs and his communication was for the confidential information of the officers of the Department, and was not brought to the knowledge or attention of the entryman until after the institution of the Chandler contest, more than six years after the issuance of the receiver's final receipt. And in my judgment it cannot be regarded or deemed a protest within the meaning of the act of 1891. That act was passed by Congress to relieve the hardships of a situation existing in the General Land Office, caused by the suspension of a large number of entries "on vague and insufficient suggestions of fraud and noncompliance with the law," which had created a practical blockade in the issuance of patents, to the serious prejudice of bona fide claimants under the public land laws, and to prevent a repetition thereof. Jacob A. Harris, 42 Land Dec. Dept. Int. 611. It contemplated that a protest, within the meaning of the law, should contain allegations of issuable facts, which, if true, would defeat the entry and warrant its cancellation. And such was the construction

given the law by the Land Department immediately after its adoption, and long adhered to. In the instructions to chiefs of divisions issued by the Commissioner of the General Land Office, and approved by the Secretary of the Interior on May 8, 1891 (12 Land Dec. Dept. Int. 450), it is said:

"The word 'protest,' as here used, shall be interpreted as meaning any proceeding by any person who, under the rules of practice, seeks to defeat an entry on the ground that the entryman is guilty of fraud, either actual or constructive, in connection therewith, or has failed to comply with the law or rules of the Department governing the same, or that there was, at the time he claims that his rights attached, a claimant for the tract desired to be entered, having prior rights or superior equities thereto."

And on July 1, 1891, Secretary of the Interior Noble, in a letter to the Commissioner concerning the law and the former instruction to the Department, stated that:

"The word 'proceedings,' as used herein and in the circular of May 8, 1891 (12 Land Dec. Dept. Int. 450), will be construed as including any action, order, or judgment had or made in your office canceling an entry, holding it for cancellation, or which requires something more to be done by the entryman to duly complete and perfect his entry, and without which the entry would necessarily be canceled. Every suspended entry, where the entryman has not been duly notified thereof, and required to furnish proof necessary to complete the entry within two years from the date of the final receipt, will be released from suspension and adjudicated under the foregoing rules." 13 Land Dec. Dept. Int. 1.

And in Acting Secretary Ryan's instructions of June 3, 1904, it is said:

"To be either a contest or a protest, there must be a charge of specific facts which, if true, would defeat the entry, and upon which the entryman or party affected may take issue and demand a hearing. In cases investigated by special agents of your office, where the agent has reported sufficient facts to justify cancellation of the entry, such report is a proceeding that prevents confirmation of an entry under the act." 33 Land Dec. Dept. Int. 10.

In the course of time, however, the Department, for reasons apparently sufficient to itself, and doubtless with a desire to prevent what it deemed the spoliation of the public domain, modified the construction originally given the law, and finally held in the Trazanga Case, 40 Land Dec. Dept. Int. 300, that the provisions of section 7 of the act of 1891 had no reference to proceedings of the United States or its officers or agents in respect to entries of the claims therein specified. This decision, however, was overruled by the Acting Secretary of the Interior in the Harris Case, 42 Land Dec. Dept. Int. 611. And in the Stump Case (decided December 13, 1913) 42 Land Dec. Dept. Int. 566, he held that a report of a special agent that from his investigation "it is reasonable to believe that these entries were not made in good faith by the entrymen for the purpose of making homes thereon, and as the lands are all in a district that is heavily timbered it seems evident that the purpose is to acquire these timber lands in the interest of one transferee, under cover of the homestead law," was not a protest within the meaning of the law, because it contained no issuable statement affecting the entry.

Now, the Hobbs report of 1903 contains no statement or allegations of any issuable fact affecting the validity of Haynes' entry which, if

true, would warrant its cancellation, or upon which the entryman could have joined issue. He only reports that he had reasonable information that the entry was not made in good faith, and that it was the general rumor that the entryman had not complied with the homestead law. These statements may have been true, and yet the entry perfectly valid, and the entryman entitled to his patent. The report contained no allegations of any specific fact showing, or tending to show, that the entry was fraudulent, or that the entryman had not complied with the law, and does not show even a prima facie reason for the cancellation of the entry.

[2] The defendant's counsel insist, however, that whether the Hobbs report was a protest within the meaning of the law was a question for the Land Department, and that its decision is binding on the courts. In support of this position they cite Fisher v. United States, 37 App. D. C. 436, and United States v. Fisher, 39 App. D. C. 158. These cases were proceedings by mandamus to compel the Secretary of the Interior to issue patents for certain lands to the petitioners, on the ground that they were entitled thereto under the provisions of the act of 1891, and that the Secretary erred in holding that the report of a special agent in the particular cases referred to was a protest within the meaning of the law. The court held, in accordance with the settled rule that courts will not interfere by mandamus with the officers of the Land Department in the exercise of their duties while the matter remains in their hands for decision (Johnson v. Towsley, 13 Wall. 72, 20 L. Ed. 485), that it would not assume to review the action of the Department.

But here the legal title to the land has passed from the government. The purpose of the suit is to charge the holder thereof as trustee for the complainant. The question has now become one of private rights, and it is well settled that, after the title to public land has passed from the government, the jurisdiction of a court of equity may be invoked to ascertain if the patentee holds it in trust for another. In such case the decisions of the Land Department on questions of fact, unaffected by fraud or mistake, are conclusive on the courts. But if it appears that the party claiming the equity had established his right to the land to the satisfaction of the Land Department in the true construction of the acts of Congress, but that by an erroneous construction the patent has issued to another, the court will correct the mistake. Johnson v. Towsley, supra; Sanford v. Sanford, 139 U. S. 642, 11 Sup. Ct. 666, 35 L. Ed. 290; Howe v. Parker, 190 Fed. 738, 111 C. C. A. 466.

And such is the case at bar. Assuming the facts to be true as found by the Land Department, it erred as a matter of law in holding that a valid protest against the issuance of a patent to the entryman had been filed within the time required by law.

It follows that the motion to dismiss should be overruled; and it is so ordered.

PALERMO LAND & WATER CO. v. RAILROAD COMMISSION OF CALIFORNIA et al.

(District Court, N. D. California, Second Division. February 8, 1915.)

No. 114.

COURTS ⟹508—FEDERAL COURTS—ENJOINING RATES ESTABLISHED BY STATE COMMISSION.

The California Public Utilities Act (St. Cal. 1911 [Ex. Sess.] p. 18), gives to the state Railroad Commission power to fix rates to be charged by public utilities, and provides (section 66) that after any order fixing rates any party affected may apply to the Commission for a rehearing, and that no cause of action arising out of any such order shall accrue in any court unless application for a rehearing shall have been made before the time for the order to become effective. It also empowers the Commission to suspend the order pending the rehearing if necessary. *Held*, that a federal court will not entertain a suit to enjoin enforcement of such an order, on the ground that it violates constitutional rights, until the complainant has exhausted the legislative remedy provided by the state by an application for a rehearing.

[Ed. Note.—For other cases, see Courts, Cent. Dig. §§ 1418-1423, 1425-1430; Dec. Dig. ⟹508.]

In Equity. Suit by the Palermo Land & Water Company against the Railroad Commission of the State of California and others. On motion to dismiss bill. Motion granted.

Appeal dismissed 225 Fed. 1022, — C. C. A. —.

McCutchen, Olney & Willard, of San Francisco, Cal., for plaintiff.

Max Thelen and Douglas Brookman, both of San Francisco, Cal., for defendants.

VAN FLEET, District Judge. The bill seeks a final decree avoiding an order of the defendant Commission, made in the exercise of power conferred by the Public Utilities Act of the state (Stats. of Cal. [Ex. Sess.] 1911, p. 18), fixing plaintiff's water rates, on the ground that such rates are confiscatory and will take plaintiff's property without due process of law; and it asks for an injunction enjoining enforcement of the order pendente lite. The defendant has moved to dismiss the bill on the ground that the action is prematurely brought.

Section 66 of the Public Utilities Act provides that after any order or decision by the Commission any party pecuniarily interested may apply to the Commission for a rehearing in the matter, and that:

"No cause of action arising out of any order or decision of the Commission shall accrue in any court to any corporation or person unless such corporation or person shall have made, before the effective date of said order or decision, application to the Commission for a rehearing."

The bill fails to disclose that any application was made for a rehearing in the present case, and it was conceded at the argument that no such application had been interposed.

It is contended by the defendants, and I think correctly so, that the facts bring the case within the principles of Prentis v. Atlantic Coast Line Co., 211 U. S. 210, 29 Sup. Ct. 67, 53 L. Ed. 150. There the Constitution and laws of Virginia vested the power to fix rates for public utilities in a state Commission, but provided that any party deeming himself aggrieved should have the right of appeal from the action of the Commission to the Court of Appeals of the state, which latter tribunal was vested with power to review the order of the Commission, and if found to be unjust to itself make such order fixing rates as in its judgment should have been made by the Commission in the first instance. The state Commission having made its order fixing the rates there complained of, the railroads affected, without availing themselves of the right of appeal to the court of last resort of the state, filed their bills in the Circuit Court of the United States to have the enforcement of the order enjoined on grounds precisely similar to those involved here. An injunction having been granted, the Commission appealed to the Supreme Court, where it was held that, regardless of the form of the tribunal or its general judicial powers, the fixing of rates is a legislative and not a judicial act, and that a party injured by such order, no matter what the form of the proceeding in which it is made, may not at the proper time be debarred from having it judicially reviewed, but that, the railroads having failed to avail themselves of the right of appeal afforded them by the state law before filing their bills, the proceedings were premature and could not be entertained.

This is rested, not only upon well-settled principles of equity jurisprudence, but upon the dictates of comity as well; that where a state has provided, as is its right, a complete legislative scheme for the fixing of rates, those rights should not be interfered with, nor the proceedings of the state arrested, until the last legislative step has been taken, and it may definitely be seen whether the act of the state as a finality ignores or infringes upon the rights of the complaining party; that until such time it cannot be said that the state authorities have violated those rights, or refused to observe them, and until that stage is reached it is not within the province of the federal courts to interfere. As aptly and tersely put by the Chief Justice in his concurring opinion:

> "The transaction must be complete, and jurisdiction cannot be rested on hypothesis. A fortiori, this must be so where federal courts are asked to interfere with the legislative, executive or judicial acts of a state, unless some exceptional and imperative necessity is shown to exist, which cannot be asserted here. Moreover, this is demanded by comity, and what comity requires is as much required in courts of justice as in anything else. * * * And as applied to federal interference with state acts, the observance of this rule of comity should be regarded as an obligation. It is recognized as such by section 720 of the Revised Statutes."

These considerations have application and controlling effect in the present case. It can with no more propriety be said here that the proceedings of the state commission were complete without an op-

portunity to revise its order on petition for rehearing than that the order of the Virginia Commission was final without the exercise of the revisory power of the Court of Appeals. The right and opportunity to correct any injustice or imperfection in its order before having it assailed is as imperative here as was the right of the Virginia Commission to have its order reviewed by its court of last resort. It is the last legislative step, and without it its action is incomplete. Nor are the cases to be distinguished by the fact that there the appeal was to a separate tribunal while here the tribunal is the same. The principle applies equally in both cases. As made plain by the Supreme Court, the function of the Court of Appeals, under the Constitution and laws of Virginia governing the fixing of rates, was no less a legislative act because committed to a tribunal exercising in other respects high judicial powers. It was still but a part of a legislative scheme to accomplish legislative ends. It can make no possible difference, therefore, in the application of the principle that here the right of review or reconsideration is committed to the same body by whom the order is originally made. Being but a legislative act, it is as competent for the Commission to review and correct its order as it would be were that function committed to any other body; and it should be afforded that opportunity.

Nor can it make any difference in the present inquiry if, as contended by the plaintiff, the Utilities Act, properly construed, gives the Commission power to order a rehearing upon its own motion. It is not required to take any such step, while the act expressly provides that the order shall not be deemed final or actionable until an application for a rehearing has been made by the party aggrieved and action had thereon. It is further said, in effect, that an application for rehearing is not effectual to arrest the taking effect of the order, since under section 66 of the Utilities Act such application does not automatically suspend its operation, and that therefore, notwithstanding such application, it would be within the power of the Commission, by a failure or refusal to act upon it until after the date of the taking effect of its order, to defeat plaintiff's rights and render it subject to the terms of the order, with its pains and penalties, without an opportunity to have it judicially reviewed. But obviously there is nothing of substance in this suggestion. The Commission is expressly given power to suspend its order pending a rehearing, and it is to be presumed that it would do so in any case where required to maintain the status quo. It certainly will not be presumed that it will so undertake to palter with the rights of a party as to jeopardize his remedy, nor could it do so with success. It is not within the power of the state to defeat the right of a party to have such an order judicially reviewed after it has reached a justiciable stage. This principle is emphasized in the Prentis Case. If, therefore, in a case where the party has presented his petition for rehearing, thus doing all that he can or is required to do to protect his rights, those rights should be threatened through the failure or refusal of the Commission to act, it cannot be doubted that a court of equity would deem the case one ripe for its interposition.

In this case, however, the Commission has expressly declared at the bar and in its brief its readiness to entertain an application for a rehearing of the present order, notwithstanding the lapse of the usual time given for the purpose, and has intimated its readiness to suspend the effect of the order until such petition can be passed upon. Should such application be made, and relief denied for any reason, plaintiff will then be in a position to seek a judicial review of the order; but the present bill must, for the reasons indicated, be regarded as premature.

There is nothing in Detroit & Mackinac R. R. Co. v. Michigan Railroad Commission et al., 235 U. S. 402, 35 Sup. Ct. 126, 59 L. Ed. 288, just decided (December 14, 1914), tending to affect or modify these views.

The motion to dismiss is granted, without prejudice, however, to the right of the plaintiff to renew its application here, should the circumstances require.

In re REEVES.

(District Court, N. D. New York. November 24, 1915.)

1. BANKRUPTCY ⚷140—TITLE—DELIVERIES FOR SALE UPON CONSIGNMENT.

Under an agreement between W. and the bankrupt, W. was to furnish the bankrupt fountain pens "on consignment," at a discount from the list, with rebate privileges. The bankrupt was to sell at retail prices fixed by W. and make remittances each 90 days. He was to be responsible to W. for any and all loss from any cause whatever, and upon termination of the agreement by W. he was to make payment for all goods sold and not paid for, and return all unsold pens, together with showcases, signs, trays, etc., furnished by W. W. sent the bankrupt certain pens, together with trays, accompanied by an invoice reciting that the pens therein described were "sold" to the bankrupt. *Held* that, while the invoice imported an absolute sale, reading it in connection with the agreement, the pens were for sale on consignment, and the title to the pens and trays was in W.

[Ed. Note.—For other cases, see Bankruptcy, Cent. Dig. §§ 198, 199, 219, 225; Dec. Dig. ⚷140.]

2. BANKRUPTCY ⚷274½, New, vol. 4 Key-No. Series—TRUSTEE—LIABILITY FOR LOSS OF PROPERTY IN BANKRUPT'S POSSESSION.

Where, upon demand, the trustee in bankruptcy refused to surrender pens in the bankrupt's possession at the time the petition in bankruptcy was filed, claiming they belonged to the estate, and some of them subsequently disappeared, the trustee and the estate in bankruptcy were liable to W. therefor, whether they were lost negligently, or without fault on the part of the trustee, since it was his duty to surrender them, and when he retained them he was not a gratuitous bailee, or a bailee for hire, but a tort-feasor, and, moreover, if he assumed the contractual relation of the bankrupt, the contract expressly made him liable for the value of pens lost and not returned.

3. BANKRUPTCY ⚷471—COSTS—DISCRETION OF REFEREE.

In a proceeding to reclaim from the possession of a trustee in bankruptcy property belonging to the claimant, where the referee found for

---

⚷For other cases see same topic & KEY-NUMBER in all Key-Numbered Digests & Indexes

the claimant, it was within his discretion to direct the trustee to pay the claimant $10 costs and disbursements in establishing his right and title.

[Ed. Note.—For other cases, see Bankruptcy, Cent. Dig. §§ 873–877; Dec. Dig. ⟹471.]

In Bankruptcy. In the matter of Charles E. Reeves, bankrupt. On review of an order of the referee directing the return to the claimant, Paul E. Wirt, by the trustee in bankruptcy, of certain property of the value of about $4, and the payment of the sum of $23.70, the value of certain other property in the possession of the bankrupt, and which came into the hands of the trustee with the property owned by said bankrupt. The referee also directed that the trustee pay the claimant $10 costs and disbursements in establishing his right and title. Order affirmed.

T. B. & L. M. Merchant, of Binghamton, N. Y., for claimant.
Vere H. Multer, of Binghamton, N. Y., for trustee.

RAY, District Judge. [1] Prior to the bankruptcy of Reeves and on August 13, 1912, he entered into a written agreement with Paul E. Wirt, the claimant, by which Wirt agreed to furnish Reeves an assortment of fountain pens "on consignment" at a discount of 40 per cent. from the list, with rebate privileges. Reeves was to sell the pens at regular retail prices fixed by Wirt and make remittance each 90 days. The contract fixed "rebates on consignment sales" from 3 to 12 per centum, depending on quantity sold, and these rebates were payable in fountain pens at wholesale prices January 1st each year. By express provision Reeves was to be responsible to Wirt for any and all loss from any cause whatever. The agreement could be terminated by Wirt at any time, and in such event Reeves was to "make payment for all goods sold and not paid for" (meaning, of course, that Reeves was to pay for such goods as he had sold and failed to remit for, less his rebate) and return all pens not sold, and also showcases, signs, trays, etc., furnished by Wirt. August 26, 1913, Wirt delivered to Reeves 48 pens, with certain trays, etc., accompanied by an invoice reading, so far as material, as follows:

"Paul E. Wirt. Fountain Pen Terms: Remit every 3 mos. for goods sold.
"Bloomsburg, Pa., Aug. 26, 1912.

"Sold to Mr. Chas. E. Reeves, 61 Chenango St., Binghamton, N. Y.: [Here followed an itemized list of 48 pens, with prices.]"

The invoice in its terms and language plainly imparts an absolute sale of the pens, but read in connection with the agreement referred to it is plain that Reeves received and held the pens for sale on consignment, and that the trays, etc., belonged to Wirt; the title to the pens being in Wirt.

[2] At the time the petition in bankruptcy was filed Reeves had on hand, in addition to a specialty oak case, 18 of these pens, which went into the hands of the trustee in bankruptcy. These were demanded by Wirt, but the trustee claimed that they belonged to and formed a

part of the estate of the bankrupt, and he therefore refused to surrender them, and kept them in the place of business, where, by authority of the court, he was continuing the business of the bankrupt, and offered them for sale, and it is conceded sold 3 of them. When this reclamation proceeding was instituted and a hearing had the trustee conceded he had sold 3 of the pens and that he had but 2 remaining, and that the other 13 had disappeared. The value of the pens so sold and of those which disappeared is found to be $23.70, and the referee found that the trustee should pay over this sum and surrender and deliver to Wirt the pens on hand.

When or how or by what means these pens disappeared does not appear. It does appear that they belonged to Wirt, that it was the duty of the trustee to have surrendered them on demand and that he refused to do so, that the estate in bankruptcy had them, and that the trustee assumed ownership and dominion thereof. So far as Wirt, the claimant, is concerned, the estate in bankruptcy and the trustee in bankruptcy became accountable and liable to him therefor, as much as if Wirt had sold the trustee the pens to carry on the business. It was the appropriation by the trustee of the property of Wirt to the use of the bankrupt estate in carrying on the business. So far as Wirt, the claimant, is concerned, it is immaterial that the trustee negligently, or without fault on his part, lost the pens. When he retained the pens without right so to do, he, as trustee, became liable therefor. He was not a gratuitous bailee, or a bailee for hire, but a tort-feasor. If it be held he assumed the contractual relation and liability of Reeves, the bankrupt, then under the terms of the contract referred to he, as trustee, became liable to Wirt for the value of the pens lost and not returned, and so the contract expressly provides.

[3] The imposition of costs and disbursements, in view of the facts, was within the discretion of the referee.

Order affirmed.

FLORIDA NAT. BANK OF GAINESVILLE, FLA., v. MERCHANTS' & FARMERS' BANK OF CLAXTON, GA.

(District Court, S. D. Georgia. November 10, 1915.)

1. BANKS AND BANKING ⟹117—REPRESENTATION OF BANK BY OFFICER—INDIVIDUAL INTEREST OF OFFICER.

Where a third person deals with an officer of a bank in a matter in which the officer is personally interested, the officer acts in a dual and inconsistent capacity, and his acts are not binding upon the bank.

[Ed. Note.—For other cases, see Banks and Banking, Cent. Dig. § 288; Dec. Dig. ⟹117.]

2. BANKS AND BANKING ⟹117—REPRESENTATION OF BANK BY OFFICERS—INDIVIDUAL INTEREST OF OFFICER.

Where the holder of a certificate of stock in a bank as collateral security for a debt of its cashier sent such certificate to the bank itself, with a request that smaller certificates be issued in lieu thereof and returned, which the bank undertook to do, it was responsible for the proper execution and return of the new certificates, and is liable for the action of its cashier in raising certain of the certificates after they were signed, sending the raised certificates, and retaining others equal to the difference.

[Ed. Note.—For other cases, see Banks and Banking, Cent. Dig. § 288; Dec. Dig. ⟹117.]

3. CORPORATIONS ⟹123—STOCK—CONVERSION—ACTION BY PLEDGEE—ALLEGATION OF DAMAGES.

In an action by a holder of stock as collateral security to recover damages for conversion of a portion of the stock, plaintiff, as a basis for damages, must allege the amount of the debt secured.

[Ed. Note.—For other cases, see Corporations, Cent. Dig. §§ 481, 491, 507-512, 537, 539-546, 569, 618; Dec. Dig. ⟹123.]

At Law. Action by the Florida National Bank of Gainesville, Fla., against the Merchants' & Farmers' Bank of Claxton, Ga. On demurrer to petition. Sustained in part.

This is a suit at law, and in its petition plaintiff alleges that defendant is indebted to it in the sum of $5,000, besides interest, for its negligent and fraudulent failure to deliver to plaintiff 40 shares of the capital stock of the Georgia bank, of the par value of $125 per share, to which the Florida bank claims that it was entitled. The petition alleges that on March 2, 1912, plaintiff was the owner and holder of 160 shares of the capital stock of defendant bank, same being held as collateral security for certain loans made by plaintiff to one J. B. Smith, who was at that time the cashier of the Georgia bank; that on February 14, 1912, said J. B. Smith requested the plaintiff to send the stock certificate for said 160 shares of stock to the Georgia bank, with instructions to divide it into smaller certificates, and that on March 2, 1912, plaintiff forwarded said certificate for said 160 shares of stock to the defendant bank at Claxton, Ga., with the request that said bank should reissue this stock in a large number of smaller certificates, and have same transferred to the Florida bank by Mr. Smith, and to return same under registered cover; that said stock certificate was received by defendant bank, and that said J. B. Smith, as cashier, prepared new certificates in lieu of the old certificates, and that the president of the bank signed same; that two of these smaller certificates, signed by the president, were for five shares each, but that the said cashier, in writing out these certificates for 5

shares each, wrote the word "five" with a small "f" and at a sufficient distance to the right of the left margin of the certificate, so as to enable him to write before said word "five" any other word expressing a larger number of shares, and that similarly said J. B. Smith, as cashier, placed the figure "5" in the space indicated upon said certificates to show in numerals the number of shares for which the certificate was given, at a sufficient distance to the right of the space indicated, so as to enable him to place before said figure "5" any other figure so as to express a larger number of shares; that the president of said bank negligently and carelessly signed said certificates of stock so prepared by said cashier without in any wise filling in or obliterating the spaces so left by said cashier as above set forth, so as to prevent the fraudulent raising of said certificates; that the president of said bank delivered to the said J. B. Smith, as cashier of the bank, the said various smaller certificates aggregating 160 shares of stock, including the two for 5 shares each above mentioned, so that he could transmit same to plaintiff in lieu of the original certificate sent by plaintiff to said bank; that said cashier, before transmitting said two certificates for 5 shares each to plaintiff, raised same, so as to indicate that they were for 25 shares each, by putting the figure "2" before the figure "5" and the word "twenty" before the word "five" in the appropriate places on said certificates, thus enabling said cashier to abstract 40 shares of said capital stock—the true amount of the valid stock thus returned to plaintiff being 120 shares, instead of 160, which were sent to said defendant bank. Plaintiff therefore claims in its suit that it was damaged in the sum of $5,000, which was the value of the 40 shares of stock to which it was entitled, and which were not returned to it.

The defendant duly filed its demurrers, both general and special, to said petition; the main grounds which the court thinks it necessary to notice in this opinion being as follows: That said petition is not sufficient in law; that said petition shows on its face that the transaction in question was a transaction between the Florida bank and said J. B. Smith, not as cashier of the Georgia bank, but as an individual conducting his private individual business, in which he and the plaintiff alone were interested, and with which the Georgia bank had no concern; that the petition shows that said Smith was not acting as cashier of the defendant bank in his official capacity in said transaction, but, on the contrary, was acting as an individual, and as the agent and representative of the plaintiff; that the petition shows that plaintiff was not the owner of said 160 shares of stock, but simply held same as collateral security for an indebtedness due by said Smith to plaintiff; and that the amount of $5,000 damages claimed by plaintiff is a mere conclusion of the pleader, and no facts warranting such conclusion are stated in the petition.

Garrard & Gazan, of Savannah, Ga., for plaintiff.

Oliver & Oliver, of Savannah, Ga., and J. Saxton Daniel, of Claxton, Ga., for defendant.

LAMBDIN, District Judge (after stating the facts as above). The case is now before the court on the demurrer of defendant. Of course, the court in deciding this demurrer must accept as true all the allegations of the petition which are well pleaded, and also such inferences as a jury may reasonably draw therefrom.

[1] 1. While the acts of a cashier of a bank performed within the scope of his duties are ordinarily binding upon the bank, it is well settled that, where a third person deals with the officer of a bank in a matter in which the officer is personally interested, the officer then acts in a dual and inconsistent capacity, and his acts are not binding upon the bank. 5 Cyc. p. 466; Moores v. Citizens' Nat. Bk. of Piqua,

111 U. S. 156, 4 Sup. Ct. 345, 28 L. Ed. 385; Germania Safety Vault & Trust Co. v. Boynton (Circuit Court of Appeals, Sixth Circuit) 71 Fed. 797, 19 C. C. A. 118.

[2] In this case, therefore, if the plaintiff bank had dealt alone with the cashier, J. B. Smith, and had intrusted to him the certificate of stock in question, and requested him to have smaller certificates issued to it in lieu of the original, and if J. B. Smith had caused the president of the bank to sign up the smaller certificates representing the required amount of stock, and had then, after the president had signed these certificates, raised two of same, so as to enable him to convert 40 shares of stock, as described in the petition, the defendant bank, under the principles laid down in the above authorities, would not have been bound by the act of its cashier, because the cashier in such event would have been acting entirely in his own personal matter, and his interest would have been adverse to that of the bank.

The Circuit Court of Appeals of the Eighth Circuit had before it just such a case as that supposed in the preceding sentence in the case of Exchange National Bank of Spokane v. Bank of Little Rock, reported in 58 Fed. 140 to 143, 7 C. C. A. 111, 22 L. R. A. 686, in which the court, speaking through Sanborn, Circuit Judge, held that where a clerk, acting in his individual matter, raised a draft which had already been completed and signed by the cashier of the bank for the sum of $25 to $2,500, and negotiated same to an innocent purchaser, the bank was not bound; that the forgery by the clerk, and not the negligence of the bank, was the proximate cause of the loss; and that in the transaction in question the clerk did not act as an employé of the bank, but in an inconsistent relation. The court in that case draws a distinction between cases where officers of banks execute checks or notes leaving blanks therein, which are subsequently filled in, and the instruments then sold to innocent purchasers, and cases where completed checks or notes are executed by bank officials, and afterwards raised by subordinates in the bank or other persons. Although there is a conflict of authorities on the subject, the court thinks that the reasoning of Judge Sanborn in the case in question is sound, and it gives its full assent to same. The decision of the Supreme Court of the United States in the case of Moores v. Citizens' National Bank of Piqua, 111 U. S. 156, 4 Sup. Ct. 345, 28 L. Ed. 385, cited above, is to the same effect.

However, in the case at bar, the petition expressly alleges that plaintiff sent the stock in question, not to the cashier, J. B. Smith, but to the "defendant bank" itself, and that the "defendant bank" received this stock and undertook to have smaller certificates reissued and returned to plaintiff. The plaintiff, therefore, was careful not to attempt to deal with J. B. Smith himself in the matter, but undertook to deal with the bank; and, having intrusted 160 shares of stock to the bank to be reissued in smaller certificates, it had the right to have returned to it the whole amount of 160 shares, and if a smaller amount was returned, the bank, under the allegations of the petition, would be liable for the deficit. The court is compelled to take the allegations of the petition as they stand. What the evidence will show on the trial is

another question. If it should develop in the trial of the case that plaintiff either knew, or by the exercise of ordinary diligence should have known, that the letter in which it forwarded the certificate for 160 shares would be received by Cashier J. B. Smith, and that the matter would be handled by him, then the principles contended for by defendant in its demurrer would be sound, according to the authorities above cited, and the plaintiff would not be entitled to recover in the case. But under the allegations of plaintiff's petition plaintiff did not undertake to deal with J. B. Smith, the cashier, but undertook to deal directly with the bank itself, and therefore the petition sets forth a good cause of action on its face, although the ground of liability may be a narrow one. Of course, as the matter in question was a personal matter between the plaintiff bank and Cashier Smith, plaintiff was bound not to deal with him in having its stock reissued, but should have dealt with some other officer of the bank not occupying an adverse relation. Whether plaintiff was justified, under the circumstances, in mailing its certificate of stock to the "defendant bank," on the assumption that Cashier Smith would not receive the letter and handle the transaction, but that some other officer of the bank would do so, is not for the court to decide as matter of law, but same is a question of fact, to be submitted to the jury under proper instructions for their determination.

It is a maxim in equity that, where one of two innocent persons must suffer by the act of a third person, he who puts it in the power of the third person to inflict the injury must bear the loss. It is necessary for a person, in order to take advantage of this principle, to show that he is innocent and not negligent. The plaintiff bank, under the allegations of its petition, exercised due care, and was entirely innocent in the matter, and therefore the loss should fall on the defendant bank, as the defendant bank, by its employment of J. B. Smith as cashier, put it in his power to do the wrong in question. However, if on the trial of the case it should develop that the plaintiff bank was negligent, and therefore not an innocent party, but knew or ought to have known that the letter would be received by Cashier Smith and that he would handle the transaction, then it should suffer the loss, because by so sending the stock to Cashier Smith it placed it in his power to commit the fraud complained of.

[3] 2. The plaintiff's petition, however, is defective, in that it does not clearly set forth the extent of its damages. It alleges that it held the stock only as collateral security for an indebtedness due to it by J. B. Smith. Of course, although it only held this stock as collateral, it had the right to sue for any conversion of the stock, as it had a special property in same. However, the amount of its debt against J. B. Smith is not set forth in the petition. Plaintiff bank would be entitled to recover only to the amount of its damage. It is possible that the 120 valid shares of stock received by it are sufficient in value to pay the amount of this indebtedness against Smith, and if such is the case it would not be damaged at all in the transaction. Therefore an amendment should be filed by plaintiff, setting forth the amount

of its indebtedness against Smith and the extent of the damages sustained by it on account of the transaction in question.

An order, therefore, will be entered in the case, overruling the demurrer of defendant on all the grounds except the sixteenth, and requiring plaintiff to file the amendment above suggested.

SAUER v. FLORIDA RY. CO. et al.

(District Court, S. D. New York. November 10, 1915.)

MORTGAGES ⟹153—VALIDITY—PRIOR UNRECORDED DEED.

Under Comp. Laws Fla. 1914, § 2480, and the decisions of the highest court of the state, which govern in a federal court with respect to conveyances of property in that state, a bona fide mortgagee without notice is a purchaser within the meaning of the statute, and is protected against a prior unrecorded deed.

[Ed. Note.—For other cases, see Mortgages, Cent. Dig. §§ 344, 345, 354; Dec. Dig. ⟹153.]

In Equity. Suit by Carl J. Sauer, suing on behalf of himself and all other holders of bonds issued under and secured by a certain mortgage or deed of trust, against the Florida Railway Company, the Columbia Trust Company, individually and as trustee, the Suwannee & San Pedro Railroad Company, the Live Oak & Gulf Railway Company, the St. Marys, Suwannee & Gulf Railway Company, the Florida Construction & Realty Company, and the Union Trust Company of Florida, individually and as trustee. On disposition of questions of law before final hearing. Decision for complainant.

Edgar C. Beecroft, of New York City (Charles W. Lucas, of New York City, of counsel), for complainant.

William Ferguson, of New York City, for receiver.

Odom & Crawford, of Jacksonville, Fla., for defendants.

HAZEL, District Judge. The bill is for the foreclosure of a trust mortgage given to the Carnegie Trust Company as trustee for the bondholders of the Florida Railway Company, and the jurisdiction of this court is invoked on the ground that securities exceeding in value the sum of $3,000 are in the possession of the trustee within the Southern district of New York. The principal defendants deny that such securities are of the value stated, and contend that the basis of the suit is a mortgage on railroad properties situated wholly within the state of Florida, the place of its execution, and argue that, if defendants have property here of the required value, complainant must also show affirmatively that he has not availed himself of a device to confer jurisdiction.

The questions of law involved were called up for determination under equity rule 29 (198 Fed. xxvi, 115 C. C. A. xxvi) before final

---

⟹For other cases see same topic & KEY-NUMBER in all Key-Numbered Digests & Indexes

hearing on the bill; the facts, which, briefly stated, are as follows, not being in controversy: On July 1, 1904, the Southern Investment Company, a Delaware corporation, owned all the stock and bonds of the Suwannee & San Pedro Railroad Company and of the Live Oak & Gulf Railway Company, the same being pledged to secure the payment of promissory notes and mortgage bonds of great value. In May, 1905, the said railroad companies for value deeded their railroad properties to the Florida Railway Company; but the deeds, which were subject to the mortgage under which the bonds on the respective railroads had been issued, were not recorded until 1910 when the deed by the Live Oak & Gulf Railway Company was recorded, and 1915, after this action was brought, when the deed of the Suwannee & San Pedro Railroad Company was likewise recorded. On July 1, 1909, the Florida Railway Company executed and delivered its corporate mortgage in controversy to the Carnegie Trust Company, as trustee, which recited, among other things, that all the shares of the capital stock of the Suwannee & San Pedro Railroad Company and of the Live Oak & Gulf Railway Company were pledged to the Southern Investment Company, and that the said corporate mortgage was subject thereto. Afterwards the Southern Investment Company transferred the securities held by it, consisting of stocks and bonds, to the Carnegie Trust Company, which from the sale of bonds issued under the trust mortgage had paid the debt.

Defendants contend that as the conveyances to the Florida Railway Company were not recorded as required by the statute law of Florida the pledged securities became valueless, and that as the corporations issuing the securities had parted with all their right, title, and interest in and to the railroad properties their capital stock represented nothing and their bond issue ceased to be a lien upon any property; but this contention is untenable, as the rights of complainant, a beneficiary under the trust, accrued on July 1, 1909, when the trust mortgage became of force, and at such time the unrecorded deeds must be deemed to have been ineffectual as against him and his associate bondholders. Any question arising in regard to the validity of the conveyances, of course, is governed by the laws of Florida, where the physical property is situated; but article 5, section 2480, of the Compiled Laws of Florida (1914), as construed by the highest court of that state, substantially provides that a bona fide mortgagee is a purchaser within the meaning of the statute to the extent of his interest in the property, and a deed not recorded at the time of the purchase is not binding upon him, but is ineffectual as to him. Warner et al. v. Watson, 35 Fla. 402, 17 South. 654; Broward v. Hoeg, 15 Fla. 370. And it has also been held by the Supreme Court of Florida that purchasers or creditors acquiring liens on mortgages without notice of a prior unrecorded deed will be protected against such unrecorded conveyance. Feinberg v. Stearns, 56 Fla. 279, 47 South. 797, 131 Am. St. Rep. 119; West Coast Lumber Co. v. Griffin, 56 Fla. 878, 48 South. 36. Giving effect to such decisions, I am of the opinion that the complainant, a bondholder under the trust mortgage, stands

in the same position as if the deeds to the Florida Railway Company had never been executed and delivered, and that the title to the property as to such bondholders is still in its predecessors. The complainant's rights, as said, accrued before the recording of the deeds, presumably without his knowledge of the prior conveyances, and his acquired rights are therefore thought not subject to the attack now made upon them by defendants.

Aside from this the complainant claims, and the provisions of the trust mortgage apparently support the claim, that at the time the trust mortgage was executed and delivered an intention was actually in existence to create a lien upon the stock and bonds previously pledged by the precedent companies to the Southern Investment Company, in order that the trustee might readily enforce its remedy against the pledged securities or certificates of stock, if there should be default by the mortgagor in the payment of the principal or interest. It is not improbable that complainant was aware of the fact that the Florida Railway Company went into possession and occupancy of the acquired railroad properties at the time of the execution of the unrecorded transfers; but this, standing alone, was not an acquirement of a lien with actual or constructive knowledge of outstanding equitable rights, such as would operate to subordinate the rights of the bondholders to those of the Florida Railway Company.

As the defendants have the right to interpose a further or different answer, it is unnecessary to consider at greater length the questions heretofore submitted. A decree, with costs, may be entered, declaring that the securities enumerated in the bill are within the jurisdiction of this court, and are above $3,000 in value, exclusive of interest and costs; and the defendants may have 20 days from the date of the entry of said decree in which to file their amended answer.

WILSON v. COLORADO MINING CO.

WILSON et al. v. SAME.

(Circuit Court of Appeals, Eighth Circuit. September 27, 1915.)

Nos. 4430, 4431.

(Syllabus by the Court.)

1. CORPORATIONS ⟹93—UNAUTHORIZED ASSESSMENT—LIABILITY OF CORPORATION—DEFENSE.

A corporation which, without lawful authority, assesses and thereby appropriates to itself stock in it, or a valuable interest in such stock, of which it is aware another is owner, thereby becomes liable at the option of the owner to restore to him the stock, or the interest therein and the dividends thereon, or to pay the damages caused by the taking, and the corporation's ignorance of the law or belief in its right to commit the wrong is no defense to the liability.

[Ed. Note.—For other cases, see Corporations, Cent. Dig. §§ 380, 390–402; Dec. Dig. ⟹93.]

2. ABANDONMENT ⟹5—CORPORATIONS ⟹93—INTENT—PRESUMPTION—CORPORATE STOCK.

The test of abandonment of property or of a right of action is the intent to abandon. The presumption is that an owner of property, or of the right to it, did not intend to abandon it, and the burden to prove the contrary is on him who asserts it.

A corporation, with full knowledge that W. was the pledgor of stock, the certificates of which to the pledgees were in the possession of its secretary, made an unauthorized assessment upon and sale of it to itself in the summer of 1900. W. had no knowledge or notice thereof until the fall of 1906, and he brought suit for it in September, 1908.

Held, that he did not abandon his interest in the stock or his right to recover of the company for its appropriation.

[Ed. Note.—For other cases, see Abandonment, Cent. Dig. §§ 7–9; Dec. Dig. ⟹5; Corporations, Cent. Dig. §§ 380, 390–402; Dec. Dig. ⟹93.]

3. EQUITY ⟹72—LACHES—CHANGE OF VALUE.

Where a suit in equity is brought against a wrongdoer for the misappropriation of property within the time limited for the analogous action at law, mere delay and an increase in the value of the property, unaccompanied by the intervention of the rights of innocent parties, the death of important witnesses, the loss of documentary evidence, or other similar circumstances, will not constitute fatal laches.

[Ed. Note.—For other cases, see Equity, Cent. Dig. §§ 207, 210–220, 225, 226; Dec. Dig. ⟹72.]

4. CORPORATIONS ⟹123—LACHES—MISAPPROPRIATION OF PLEDGED PROPERTY.

An unauthorized appropriation to itself by a corporation of collateral securities, with full knowledge of the interest of the pledgor therein, although with the voluntary transfer, or consent, or acquiescence, or negligence, or laches of the pledgee, is both a tort and a breach of trust, and the pledgor may maintain, at his option, a suit in equity for their recovery, or an action at law for the value of his interest therein. The laches of the pledgee is no bar to the right of action of a pledgor who has been guilty of no laches.

[Ed. Note.—For other cases, see Corporations, Cent. Dig. §§ 481, 491, 507–512, 537, 539–546, 569, 618; Dec. Dig. ⟹123.]

5. JUDGMENT ⟹599—SPLITTING CAUSE OF ACTION—SUBSEQUENTLY DISCOVERED CLAIMS.

It is a general rule that one may not split his cause of action. He who avails himself by action or defense and judgment of a part of an entire indivisible claim or cause of action thereby estops himself from maintaining an action or defense founded upon any other part of it.

But claims that were a part of the indivisible claim or cause of action, but were unknown during the pendency of the first suit to the party who used other parts of the entire claim therein, are excepted from this rule, and an action or defense may be maintained upon them after judgment in the first action.

[Ed. Note.—For other cases, see Judgment, Cent. Dig. § 1114; Dec. Dig. ⟹599.]

6. CORPORATIONS ⟹93—UNAUTHORIZED APPROPRIATION OF CORPORATE STOCK —REMEDIES OF STOCKHOLDER.

Where, without authority so to do, a corporation has appropriated to itself, or transferred to another, the stock of one of its stockholders, he is entitled in a proper suit to a decree that the company record in his name and issue to him a like amount of stock, and that, if necessary to accomplish this end, the company acquire by purchase and transfer to him the requisite amount of stock, and that, if the corporation fails to issue such amount of stock to him, it pay to him the highest value the stock attained intermediate between the date of the appropriation and the expiration of a reasonable time for him to purchase the stock after he received notice of the appropriation, interest on such amount, and the dividends on the stock that were declared while the misappropriation was in force, with interest.

[Ed. Note.—For other cases, see Corporations, Cent. Dig. §§ 380, 390–402; Dec. Dig. ⟹93.]

Appeal from the District Court of the United States for the District of Utah; J. A. Marshall, Judge.

Suits by Joseph L. Wilson and by Joseph L. Wilson and another against the Colorado Mining Company. From decrees for defendant, plaintiffs appeal. Reversed and rendered.

The appellants were plaintiffs below, where these cases, which related to stock originally owned by Joseph L. Wilson, were heard and decided together. Wilson complains that the court below declined to require the Colorado Mining Company, a corporation, to restore to him and to pay him the dividends on 5,000 shares of its nonassessable stock, which it had, without authority, assessed, sold to itself, and appropriated to its own use for a failure to pay that assessment. He sought this relief by a suit in equity, the court below dismissed his suit on the merits, and counsel for the company insist that the dismissal was right: (1) Because the complainant was estopped from maintaining it by his abandonment of his rights and his laches; (2) because his suit was barred by the compromise of and the judgment in his former action at law; and (3) because his suit was barred by the splitting of his cause of action which his former action wrought.

The Colorado Mining Company was incorporated in December, 1898, with a capital stock of $125,000, divided into 250,000 shares, of the par value of 50 cents a share. Prior to its organization Wilson was the owner of mining claims which he conveyed to the company for 73,334 shares of its stock, for which the company executed its certificates to him, but held them in its stock book under an agreement between it and the other stockholders, who purchased their stock with mining claims, that all this stock should be held by it for them, and that none of it should be sold until the treasury stock of the company should be first disposed of. Wilson was not only the owner of this large amount of stock, but he was the manager of the company until, in February, 1899, he was taken seriously ill and went to St. Mark's Hospital

in Salt Lake City, where he remained about two months, and then continued disabled for many months thereafter. He was unable to pay the hospital in full for its services, and on May 9, 1899, to secure a balance of $80 which he owed it, he made a written order, directed to the president of the Colorado Company to "issue in the name of St. Mark's Hospital five thousand (5,000) shares Colorado stock, and deliver the same to Dr. Croxall. This is for security of a bill I owe the hospital." Thereupon the company took 5,000 shares out of a certificate to Wilson of a much larger number of shares, and issued a certificate for 5,000 shares in the usual form to St. Mark's Hospital, but retained it in the possession of its secretary. At the same time Brown, as secretary of the corporation, issued and delivered to the hospital a certificate that he held the certificate for 5,000 shares in favor of the hospital in his possession until such a time as Wilson should pay to the hospital $80, or a satisfactory equivalent for its services. On May 15, 1899, Wilson pledged 10,000 shares of his stock to the plaintiff Croxall to secure $150, and like writings were made, delivered, and held by the respective parties to that pledge. On March 27, 1907, while Wilson held his interest as pledgor in these 15,000 shares of stock, and while he also owned other stock in the company which was not pledged, he demanded his certificates of stock of the company, and it refused to deliver any of the stock, or any certificate of any of it, to him on the ground that it held them in trust under the agreement heretofore stated until the treasury stock was sold. The Colorado Company had ceased mining operations and business in the fall of 1899, and about March 27, 1900, Wilson left the state of Utah and remained absent from that time until some time in the year 1907. Meanwhile, between May 1, 1900, and August 1, 1900, the Colorado company went through the form of levying an assessment upon, making a sale of, and transferring to itself the 5,000 shares then owned by Wilson as pledgor and the hospital as pledgee, and the 10,000 shares then owned by Wilson as pledgor and Croxall as pledgee, the certificates for all of which were held in the possession of the secretary of the company. About the time the assessment was made the hospital was informed thereof, but declined to pay it. There is a conflict of evidence on the question whether or not Croxall received any notice of the assessment or of the sale at any time prior to the fall or winter of the year 1907. But the evidence is conclusive that Wilson never received any notice, and never had any knowledge of the assessment, sale, or misappropriation until he returned to Salt Lake City some time in the fall of the year 1907, and then he obtained this information with difficulty, for the officers of the company denied his request to permit him to inspect its books.

Wilson knew that he had assigned the 15,000 shares of his stock to the hospital and Croxall, but he had forgotten that he had assigned it as security for his two debts only, and supposed that his assignments were indefeasible, and the only papers which evidenced the transaction were in the possession of the Colorado Company, the hospital, and Croxall. On November 27, 1907, he commenced an action at law against the company for that part of his stock, or the value thereof and the dividends thereon, which he had not assigned to the hospital or Croxall. He expressly alleged in his complaint that he had subscribed for and was originally entitled to 73,334 shares of the stock of the corporation, and that he was entitled to have issued to him all these shares, except 15,000 shares which he alleged that he had theretofore sold and delivered. In its answer the defendant not only admitted, but expressly alleged, that "on or about the 9th day of May, 1899, the plaintiff, for and in consideration of certain hospital fees, sold and delivered to the St. Mark's Hospital of Salt Lake City, Utah, 5,000 shares of the capital stock of defendant corporation," and that "on or about the 15th day of May, 1899, in consideration of medical services rendered by one Dr. W. Y. Croxall, plaintiff sold and delivered to the said Croxall 10,000 shares of the capital stock of defendant corporation then owned by plaintiff." On January 27, 1908, this action at law was compromised and settled by the entry of judgment for and payment of $4,500 upon a written stipulation of the attorneys for the parties "that the plaintiff in said action have and recover judgment in said action against said defendant for the sum of $4,500 in full satisfaction of all claims and demands of said plaintiff set forth in his complaint in said action."

Some time in June, 1908, Wilson learned that he had not assigned the stock here in controversy absolutely, and he went to the hospital and procured its release and satisfaction of the claim it held on the 5,000 shares to secure the payment of the $80 he owed to it and an assignment of the hospital's claim against the Colorado Company, and on September 8, 1898, he brought this suit. About June, 1907, Wilson first ascertained that his assignment to Croxall was not absolute, and on July 6, 1908, he assigned his claim against the Colorado Company for the 10,000 shares of stock, or the value thereof, and the dividends thereon, to Croxall, and on September 6, 1908, the latter commenced an action at law for the 10,000 shares, or the value thereof, and the dividends thereon, against the company. The corporation answered, among other things, that Croxall was estopped from maintaining his suit by Wilson's action at law and the compromise thereof, and it commenced a suit in equity against Croxall on the ground of that estoppel for the purpose of enjoining him from prosecuting his action at law. Thereupon Wilson and Croxall tendered the $4,500 which Wilson had received in settlement of his action at law and the interest thereon to the company, and demanded the avoidance of the judgment in that action. The tender was declined, the demand was denied, and on the 2d day of August, 1909, Wilson and Croxall instituted the suit in equity herein, in which they pleaded the facts which have been recited and the additional fact that Wilson was induced to compromise his action at law by the false representation of the agents or officers of the Colorado Company that he had sold and assigned 2,000 shares of his stock to William W. Brown, and they pray for the avoidance of the judgment of compromise and the stipulation upon which it was entered, that the company be required to issue 10,000 shares of its stock and to pay the dividends thereon to Croxall, and to issue 7,000 shares of stock and to pay the dividends thereon to Wilson. The Colorado Company answered this complaint by a repetition of its defenses and claims, and at the final hearing this suit was dismissed, and Croxall and Wilson appealed. The record contains other facts, but none that affect the result which those already recited compel.

M. E. Wilson and Russell G. Schulder, both of Salt Lake City, Utah (Dickson, Ellis, Ellis & Schulder and W. H. King, all of Salt Lake City, Utah, on the brief), for appellants.

Andrew Howat, of Salt Lake City, Utah (H. R. Macmillan and Frank K. Nebeker, both of Salt Lake City, Utah, and E. E. Corfman, of Provo, Utah, on the brief), for appellee.

Before SANBORN and CARLAND, Circuit Judges, and TRIEBER, District Judge.

SANBORN, Circuit Judge (after stating the facts as above). [1] Under the laws of the state of Utah and under the law of its organization the Colorado Company had no authority to assess the 15,000 shares of its stock which are the subjects of these suits, to sell them for the assessment, or to appropriate them to itself. In the belief that it had that authority it did these things, and it has ever since insisted and still contends that it thereby acquired the right to own and hold them for its own use and benefit. But an owner cannot be lawfully deprived of his property without his consent and without due process of law, and the Colorado Company took Wilson's interest in this stock without either. A corporation which, without lawful authority, appropriates to itself its stock owned by another, or the valuable interest of another, of which it is aware, in its stock, thereby becomes liable at the option of the owner to restore to him the stock or the interest therein and the dividends thereon, or to pay the dam-

ages caused by the taking, and its ignorance of the law or belief in its right to commit the wrong is no defense to that liability. Telegraph Co. v. Davenport, 97 U. S. 369, 371, 372, 24 L. Ed. 1047; Geyser-Marion Gold Min. Co. v. Stark, 106 Fed. 558, 560, 45 C. C. A. 467, 469, 53 L. R. A. 684.

This liability is not denied. The defense is that it was avoided by Wilson's abandonment and laches. The Colorado Company not only subjected itself to the ordinary liability of a corporation appropriating to itself without authority the stock of one of its stockholders, but when it took the stock here in controversy under the unauthorized assessment it had full knowledge that it held all Wilson's stock in trust until the treasury stock was sold, and that he was the owner of the 15,000 shares, subject only to the pledge of 5,000 of them to the hospital to secure his debt of $80, and the pledge of 10,000 of them to Croxall to secure his debt of $150. It had withheld its certificates to the pledgees from their possession, and Brown, as its secretary, had given them written declarations that he held the certificates for them until the two debts were paid. In March, 1900, about two months before the assessment, the company had refused to deliver to Wilson any of his stock or certificates, upon the express ground that it held them until the treasury stock should be sold under the agreement to that effect between it and the stockholders who paid for their stock with mining claims.

[2] The test of abandonment of property is the existence or non-existence of the intent to abandon. Manhattan Life Ins. Co. v. Wright, 126 Fed. 82, 89, 61 C. C. A. 138, 145; Saxlehner v. Eisner & Mendelson Co., 179 U. S. 19, 31, 21 Sup. Ct. 7, 45 L. Ed. 60; Dawson v. Daniel, 7 Fed. Cas. 215, 216, Fed. Cas. No. 3,669; Singer Mfg. Co. v. June Mfg. Co., 163 U. S. 169, 186, 16 Sup. Ct. 1002, 41 L. Ed. 118; Moore v. Stevenson, 27 Conn. 14; Livermore v. White, 74 Me. 452, 43 Am. Rep. 600; Judson v. Malloy, 40 Cal. 299; Hickman v. Link, 116 Mo. 123, 22 S. W. 472. The presumption is that the owner of property or of rights to property intends to preserve them, because this is the customary purpose of such owners, and the burden is on him who alleges abandonment clearly to establish the intent to abandon by evidence sufficient to overcome this strong natural presumption. Before Wilson left Utah, and in March, 1900, he demanded his stock of the company, and it refused to deliver it to him, because it held it in trust for him until its treasury stock was sold. When the company, without authority, appropriated to itself the property of Wilson in the stock in controversy in these suits in the summer of the year 1900, he was absent from the state of Utah, and he had no knowledge or notice of its action until the autumn of the year 1907, and he demanded his stock and brought his action at law against the company for all of it, except the 15,000 shares on November 27, 1907. He supposed these assignments of the 15,000 shares were absolute, and he did not learn that they were defeasible until June, 1908. He redeemed the 5,000 shares from the Hospital Company, and brought this suit in equity to avoid the assessment and transfer to the Colorado Company and to secure the reissue of the stock to himself on September 8, 1908. He assigned the 10,000 shares to Croxall, and the latter brought his

action at law to recover it, or the value of it, on September 6, 1908, and after the Colorado Company brought its suit in equity to enjoin that action Wilson and Croxall on August 2, 1908, commenced their suit in equity now under review for the avoidance of the assessment and transfer to the company of these 10,000 shares, for the issue of the stock to Croxall and for the dividends. There is no other evidence of any intent of Wilson to abandon his stock, or his rights therein, and this evidence has produced a strong and abiding conviction that he not only never intended to abandon his interest in any of the stock or his rights of action against the company, but that his intention always was to hold and secure the full benefit of them. His suit cannot be defeated on the ground of abandonment.

[3] But counsel insist that he was guilty of laches. How could he be? When he left Utah in March, 1900, his stock was held in trust for him by the Colorado Company until the treasury stock should be sold, with full knowledge on the part of that company that the only rights of the hospital and Croxall in the 15,000 shares were those of pledgees. The company was without power to assess this stock, or to sell it for any assessment. It had never assessed any of its stock, or intimated any purpose so to do, and Wilson had no more notice or reason to suspect that it would do so than he had to suspect that it would forge his name to a transfer of its stock, or would deprive him of it in any other unlawful way, and this condition of things continued until the autumn of 1907, when he learned for the first time of the company's unauthorized appropriation of the stock to itself in the year 1900. Until the autumn of 1907 he had no knowledge, no notice of any kind, no notice of any fact which would put a person of ordinary prudence and diligence on inquiry for the unauthorized appropriation of this stock by his own company for its own benefit. Now the company pleads the laches of Wilson, pleads that he is estopped from recovering for its wrong, because he did not expect it to violate the law, because he did not stand by and watch for its wrongdoing and sue it quickly. It does not lie in the mouth of this company to make that plea. "If a person be ignorant of his interest in a certain transaction, no negligence is imputable to him for failing to inform himself of his rights; but if he is aware of his interest, and knows that proceedings are pending the result of which may be prejudicial to such interest, he is bound to look into such proceedings so far as to see that no action is taken to his detriment." Foster v. Mansfield, Coldwater & Lake Michigan R. R. Co., 146 U. S. 88, 99, 100, 13 Sup. Ct. 28, 32 (36 L. Ed. 899). Wilson had no notice of the pendency or probable pendency of the unlawful proceedings from which he suffered until the summer of 1907.

The basis of laches is estoppel, and where there is no estoppel there is no laches. Layton Pure Food Co. v. Church & Dwight Co., 182 Fed. 24, 32, 39, 104 C. C. A. 464, 472, 479. Indispensable elements of such an estoppel are: (1) Wilson's active or culpably negligent misrepresentation of an important fact; (2) the defendant's ignorance and lack of notice of the truth concerning it; (3) the action or inaction of the defendant induced by the misrepresentation; and (4) its injury by the presentation of and action upon the truth. The fact upon the misrep-

resentation of which reliance must be had by the defendant to work the laches in this case is the plaintiff's insistence upon his right to avoid the unauthorized appropriation of his stock by the defendant. But Wilson was ignorant of that right, and made no representation concerning it until he discovered the misappropriation in the autumn of 1907. He was guilty of no unreasonable delay thereafter, and he was guilty of no negligence before, for then he had no notice of the wrong of the company. The company was not ignorant, but knew all the facts about its wrong and about the rights of the plaintiff arising therefrom. It was not induced by his misrepresentation or his silence to act or to refrain from acting, and it will suffer no injustice or wrong if the truth be presented and the company be required to surrender that which it has derived from its unauthorized misappropriation to itself of the property of the plaintiff. All the essential elements of estoppel and of laches are wanting here, and Wilson may not be lawfully defeated thereby. The doctrine of laches is an equitable principle, which is applied to promote, but never to defeat, justice. An application of it to defeat Wilson would defeat justice and sustain injustice.

The analogous statute of limitations at law bars the action three years after the discovery by the aggrieved party of the facts constituting the fraud or mistake. Comp. Laws Utah 1907, § 2877. These suits were brought within that time. Mere delay and the increase in the value of the property are not such circumstances as entitle a wrongdoer to the application of the doctrine of laches within the time fixed by the analogous statute of limitations of the action at law (Indiana & Arkansas Lbr. & Mfg. Co. v. Brinkley, 164 Fed. 963, 969, 970, 91 C. C. A. 91, 97, 98), and there are no unusual circumstances or conditions, such as the interposition of the rights of innocent third parties, the death of important witnesses, or the loss of documentary evidence, combining with changes in the value of the property to invoke the application of the doctrine of laches. Kelley v. Boettcher, 85 Fed. 55, 62, 29 C. C. A. 14, 21; Brun v. Mann, 151 Fed. 145, 154, 80 C. C. A. 513, 522; Cook, Corporations (7th Ed.) § 731. Wilson was guilty of no laches.

[4] But counsel argue that the pledgees, the hospital and Croxall, had notice of the assessment and of the sale thereunder in 1900 when they were made, that Wilson is estopped by their laches, and they cite section 330 of the Compiled Statutes of Utah of 1907, which provides that the delivery of a stock certificate of a corporation and a written transfer thereof, signed by the owner, to a bona fide purchaser or pledgee for value, shall be deemed a sufficient transfer of the title against any creditor of the transferor and all other persons whomsoever, but that for the purpose of voting, of receiving dividends, of levying and collecting assessments, and other matters in which the corporation is interested, the holder of record shall be treated and considered as the holder in fact, and the transferee shall have no rights or claims as against the corporation until transfer thereof on the books of the corporation, or a new certificate issuing to him. But this section simply states the general law regarding lawful assessments, transfers, and dividends. It in no way relieves a corporation from its lia-

bility at law or in equity for unauthorized assessments, sales, or appropriations to itself of the property rights or interests of pledgors or other parties in interest in its stock, of which it has full notice while the stock is in its possession and control.

For the purposes of the discussion of these cases it will be conceded, but it is not admitted or decided, that the pledgees received notice in 1900 of the assessment and sale of the stock. They were not, however, aware of the fact that those proceedings were beyond the power of the corporation and wrongful. They gave the matter no attention, and brought no actions until 1907. If they were guilty of laches, how can that laches avail to estop Wilson, who was not guilty of laches, from recovering his interest in the stock from the wrongdoer that had full knowledge that he held this interest and appropriated it to its own use? Undoubtedly, after the new certificates to the pledgees were executed, the pledgees, if they could have obtained delivery of those certificates from the Colorado Company, whose secretary still held them, might have so assigned and delivered them to a purchaser for value without notice of Wilson's interest therein as to estop him from recovering that interest from such a purchaser. There is no less doubt that such a person, who had notice of Wilson's interest when he purchased the stock, would take nothing but the liens of the pledgees. The Colorado Company knew that the only interest the hospital had in the 5,000 shares was its lien for $80, and that the only interest Croxall had in the 10,000 shares was his lien for the $150, and that Wilson was the owner of the shares, subject only to those liens, when it misappropriated them to its own use by the unauthorized levy and sale.

The appropriation to himself or the loss of collateral securities by a pledgee, either intentionally or by culpable negligence, is both a tort and a breach of the contract of pledge, and the pledgor may maintain an independent action either in tort or upon the contract, at his option, against the pledgee for the value of the securities of which he is deprived. Brown v. First Nat. Bank, 132 Fed. 450, 453, 66 C. C. A. 293, 296; Colebrooke on Collateral Securities, § 131. And by the same mark the unauthorized and intentional appropriation to itself by a corporation of collateral securities in its possession or under its control with full knowledge of the interest of the pledgor therein, although with the voluntary transfer, consent, acquiescence, negligence, or laches of the pledgee, is both a tort and a breach of trust, and the pledgor may maintain at his option a suit in equity for their recovery, or an action at law for the value of his interest therein. Even if the Colorado Company had not been a trustee to hold the stock for the pledgor and the pledgee, before its appropriation to itself, that appropriation would have made it a trustee de son tort for the pledgor. The pledgees cannot, by their silence, acquiescence, or laches, vest in the unauthorized appropriator, who has knowledge of the interest and rights of the pledgor, more than they could vest by their assignment, nor more than their liens. The laches of the pledgees, if it existed, did not deprive Wilson, who was guilty of no laches, of his right to maintain suits in equity against the Colorado Company for his stock, or actions at law for the value of his interest therein. And as Croxall by assign-

ment has the rights of Wilson in the 10,000 shares, neither of these suits was barred by laches.

[5] The next contention relates to the compromise judgment for $4,500 in Wilson's action at law for the 58,334 shares of stock or their value and the dividends thereon. Counsel for the Colorado Company argue that this was a judgment of compromise of all the claims of Wilson on account of these 15,000 shares, as well as of the 58,334 shares for which he sued in that action, and there is testimony in the record to the effect that such was the understanding with which the stipulation for the judgment was signed. But there is also testimony to the contrary. In view of this contradiction in the testimony, the controlling evidence is in writing. In the complaint and in the answer it is expressly averred that these 15,000 shares had been previously assigned by Wilson, they are excepted from the claim of the complaint, the exception is emphasized by the averments of the answer, and the written stipulation of compromise is for judgment for the sum of $4,500 "in full satisfaction of all claims and demands of said plaintiff set forth in his said complaint." The claims on account of these 15,000 shares were not set forth in that complaint, and the record convinces that they were not considered, compromised, or adjudged in that case.

Counsel invoke the rule that one may not split his cause of action, and that if he conduct to final judgment an action upon a part of an entire demand, such judgment is a bar to an action upon the remainder thereof, and argue that Wilson's cause of action was the failure of the Colorado Company to perform its part of Wilson's contract of subscription for its stock, that it was therefore single and indivisible, and that as he obtained judgment in his action at law for the value of a part of the stock for which he subscribed he is barred from maintaining suits in equity for the remaining 15,000 shares not included in that action. There are many reasons why these suits may not be defeated upon this ground. In the first place, if the claims to recover on account of the 15,000 shares were a part of the indivisible cause of action first brought by Wilson, the pleadings in that case that this stock had been sold and assigned to the hospital and to Croxall, and the testimony of Wilson that he did not know, during the pendency of these actions, that those assignments were defeasible, present such convincing evidence that the claims now in suit were omitted from Wilson's first action by mutual mistake that a court of equity ought not to hesitate to exercise its immemorial jurisdiction to relieve from such a mistake, and to permit the suits upon these claims to be maintained. In the second place, the evidence has convinced that during the pendency of that action Wilson had forgotten and had no knowledge that his assignments of the 15,000 shares were defeasible, no knowledge that he had any cause of action on account of the misappropriation of the 15,000 shares. And claims which are part of an entire and indefeasible cause of action, but of which the plaintiff has no notice during the pendency of an action upon it for other parts thereof, are excepted from the general rule, and an action upon them may be maintained after judgment in the first action. Lord Bagot v. Williams, 3 Barn. & Cress. 235, 107 Eng. Reports Reprint, 721, 722,

723; Kane v. Morehouse, 46 Conn. 300, 304; Gedney v. Gedney, 160 N. Y. 471, 475, 55 N. E. 1; Bendernagle v. Cocks, 19 Wend. (N. Y.) 207, 209, 32 Am. Dec. 448; Johnson v. Provincial Ins. Co., 12 Mich. 216, 222, 86 Am. Dec. 49. But, in the third place, if, as counsel contend, Wilson's cause of action at law was the breach by the company of his contract of subscription, that was not his cause of action in these suits in equity, nor were these causes a part of his demand on account of that breach. The company had signed certificates to Wilson of the 15,000 shares of stock, had afterwards segregated these 15,000 shares from all his other stock, canceled his certificates for them, signed new certificates for the 15,000 shares to the pledgees, the hospital, and Croxall, with full knowledge that they were mere securities for the $80 and $150 which he owed to them, respectively, and those certificates were in the possession of its secretary before the unauthorized assessment and sale of this stock to the company was made. And the unauthorized appropriations by the company of the 5,000 shares pledged to the hospital and the 10,000 shares pledged to Croxall were Wilson's causes of action in these suits. At the time his first action at law was pending, Wilson's debts secured by this stock had not been paid, nor had his claim against the company been assigned. He had the option to sue the company at law for a conversion of the 15,000 shares of stock, or in equity for their restoration to him. To the suit in equity for the 5,000 shares the hospital was then a proper party, and to the suit in equity for the 10,000 shares Croxall was a proper party; but neither of them was a proper party to his action at law for the 58,334 shares, or their value, and the conclusion is that the causes of action on which these suits in equity are based were not a part of Wilson's indivisible demand for a breach by the company of his contract of subscription during the pendency of his action at law, but were separate causes of action for suits in equity for separate appropriations to itself by the company of the 5,000 shares certified to the hospital and the 10,000 shares certified to Croxall and that other parties than those proper in his action at law were then proper parties to such suits. The suits here under consideration cannot be defeated on the theory that Wilson has split his cause of action.

[6] In the suit brought by Wilson and Croxall they seek to recover, in addition to the 10,000 shares pledged to Croxall, 2,000 shares which belonged to Wilson, but which were transferred from him to Brown, the secretary of the company, in 1898, without any authority from Wilson. But Wilson sued the company for this stock, or its value, and for the dividends thereon, in his action at law that was compromised and settled. He and his assignee, Croxall, pray that the compromise and judgment in that case be set aside, and that they recover these 2,000 shares of stock, on the ground that Wilson was induced to make the compromise of his action at law by the representations, made by the agents or officers of the Colorado Company at the time of the compromise, that Wilson had signed an assignment of that 2,000 shares, when the truth was that he had never done so. Conceding that the misrepresentation pleaded was made, and conceding the fact that Wilson never authorized the transfer, these facts present no such

equity as would sustain a decree for the avoidance of the judgment of compromise and the recovery of the 2,000 shares. Wilson alleged in his complaint in his action at law that he had never assigned or authorized the assignment of these 2,000 shares, and he verified that complaint. The Colorado Company answered that Wilson had sold and delivered these shares to Brown for services performed by the latter at Wilson's request, and this answer was verified by the president of the corporation. Now, if any agent or officer of the corporation represented at the time of the settlement of the action that Wilson had signed an assignment of the 2,000 shares of the stock to Brown, this was not a stronger representation than the sworn statement of the president to the same effect found in the answer. The fact undoubtedly is that throughout the pendency of that action Wilson asserted, and the company denied, that he had authorized the transfer of this stock to Brown. No doubt the assertion of each was one of the inducements that caused the other to assent to the compromise; but that fact is insufficient to sustain a suit to avoid it, although subsequent to the compromise it clearly appears that one was right and the other wrong. If the opposite rule were adopted, no compromise of issues in litigation could stand. The compromise and judgment bar any relief to Wilson or Croxall on account of the 2,000 shares.

In the year 1906, the capital stock of the Colorado Company was increased from $125,000, divided into 250,000 shares, of the par value of 50 cents a share, to $200,000, divided into 1,000,000 shares, of the par value of 20 cents a share. And in their complaints the plaintiffs ask to recover 15,000 of the additional shares and the dividends thereon on account of the 5,000 shares, and 30,000 of the additional shares and the dividends thereon on account of the 10,000 shares. But the evidence persuades that the additional shares and their proceeds were applied to the use and benefit of the corporation, and that none of them was distributed to any of the stockholders as a dividend, or a part of a dividend. There is, therefore, no proof to sustain any relief on account of the increase of the capital stock.

Let the decrees below be reversed, and let a decree be rendered in Wilson v. Colorado Mining Company that the attempted assessment, sale, and appropriation by the company to itself of the 5,000 shares of stock were unauthorized, and are set aside and for naught held; that the company issue and duly register in its books in the name of Wilson as owner 5,000 shares of its stock, and issue and deliver to him a stock certificate in the usual form to the effect that he is the owner thereof, and extend to him the usual rights of owners of stock to vote, act, and receive dividends; that in case it has issued all its stock, or for any other reason cannot without further action issue such stock, it purchase the necessary amount of its stock to enable it to comply with the foregoing requirement, cause this stock to be duly transferred to Wilson, and then register, record, and issue to him the 5,000 shares and the certificate thereof, and otherwise comply with the foregoing requirement (Pratt v. Taunton Copper Co., 123 Mass. 110, 112, 25 Am. Rep. 37; Pratt v. Boston & Albany R. R. Co., 126 Mass. 443; Boston & Albany R. R. Co. v. Richardson, 135 Mass. 473,

474, 477, 478; 1 Cook, Corporations [7th Ed.] § 284; 2 Cook, Corporations [7th Ed.] § 367); that Wilson recover of the Colorado Company an amount equal to the sum of the dividends that the company has declared on 5,000 shares of its issued stock intermediate between 1900 and the date of the decree, and interest on such dividends from the respective times when they became payable, and his costs and disbursements in this case, and that he have judgment and execution therefor; that in case the Colorado Company fails to vest in Wilson, or to duly record in its books in his name as owner, or to issue and deliver to him, its stock certificate for 5,000 shares of its valid stock within 90 days after the entry of the decree, then said Wilson recover of it, in addition to the foregoing amounts, a further amount equal to the highest intermediate value of the 5,000 shares of stock between July, 1900, and January 1, 1909, a reasonable time for Wilson to have purchased the 5,000 shares after he discovered their misappropriation and his interest in them as pledgor, and interest on that amount from that date (Telegraph Co. v. Davenport, 97 U. S. 369, 371, 24 L. Ed. 1047; McKinley v. Williams, 74 Fed. 94, 103, 20 C. C. A. 312; 2 Cook, Corporations [7th Ed.] § 581, p. 1727, note 1; Baker v. Drake, 53 N. Y. 211, 217, 13 Am. Rep. 507; In re Swift [D. C.] 114 Fed. 947, 949; Walley v. Deseret National Bank, 14 Utah, 305, 315, 47 Pac. 147); and that he have judgment and execution to collect the same. Let the decree also contain such further provisions, consistent with the views expressed in this opinion, as may commend themselves to the judgment of the court below.

Let a like decree regarding the 10,000 shares be rendered in favor of the plaintiff Croxall in the suit of Wilson and Croxall against the Colorado Mining Company.

FREEMAN v. UNITED STATES.

(Circuit Court of Appeals, Second Circuit. August 25, 1915.)

No. 311.

1. CRIMINAL LAW ⚷1106—APPEAL—TRANSCRIPT OF RECORD—TIME FOR FILING.

   The failure of an appellant or plaintiff in error to file a transcript of the record in the Circuit Court of Appeals within the time fixed by the rules is not jurisdictional, and for good cause shown the court may in its discretion permit it to be filed subsequently.

   [Ed. Note.—For other cases, see Criminal Law, Cent. Dig. §§ 2890–2892; Dec. Dig. ⚷1106.]

2. CRIMINAL LAW ⚷1106—APPEAL—TIME FOR FILING TRANSCRIPT—DISMISSAL.

   A plaintiff in error in a criminal case did not file a transcript of the record until more than two years after return day of the citation and writ of error, when, under the rules, it should have been filed, unless the time was extended. The time was extended from time to time through several months, and the case was then placed on the calendar with the consent of counsel for both sides, and with the knowledge by them and by the court that the transcript had not been filed. Counsel for the government appeared in the case several times afterward without objection

on that ground, but four days before filing of the transcript moved for dismissal. The transcript was unusually large, and its preparation and printing involved much time and large expense; also for several months a motion for new trial in the court below and consequent proceedings which might have rendered the error proceedings unnecessary were pending. *Held*, that the placing of the case on the calendar was equivalent to an indefinite enlargement of the time for filing the transcript, and that under the facts the government was not entitled to a dismissal.

[Ed. Note.—For other cases, see Criminal Law, Cent. Dig. §§ 2890–2892; Dec. Dig. ⚷1106.]

3. CRIMINAL LAW ⚷1106—APPELLATE PROCEEDINGS—BILL OF EXCEPTIONS—TIME FOR SETTLING—CONSENT TO EXTENSION.

A district attorney, by consenting to and stipulating for extensions of the time for settling the bill of exceptions in a criminal case after the term, by requesting delay and to some extent causing the same by remissness in furnishing necessary exhibits, *held* to have acquiesced to a degree amounting to an implied agreement that the time should be extended until the bill was finally settled, which rendered it inequitable to ask for a dismissal because of the delay.

[Ed. Note.—For other cases, see Criminal Law, Cent. Dig. §§ 2890–2892; Dec. Dig. ⚷1106.]

4. CRIMINAL LAW ⚷991—JUDGMENT—CONVICTION ON DIFFERENT COUNTS.

There can be but one judgment on a conviction in a criminal case, although based on a number of counts or indictments consolidated for trial.

[Ed. Note.—For other cases, see Criminal Law, Cent. Dig. §§ 2518, 2525, 2528; Dec. Dig. ⚷991.

Consolidation of and trial of indictments together, see note to Dolan v. United States, 69 C. C. A. 287.]

5. CRIMINAL LAW ⚷634—CONSTITUTIONALITY OF COURT—SUBSTITUTION OF JUDGE DURING TRIAL.

To a constitutional trial of a defendant charged with a felony in a court of the United States, the continuous presence of a judge and a jury of 12 men is essential, and another judge cannot lawfully be substituted for the one before whom the trial was commenced, during its progress, and while the testimony is being taken.

[Ed. Note.—For other cases, see Criminal Law, Cent. Dig. §§ 1461–1464; Dec. Dig. ⚷634.]

6. JURY ⚷9—"TRIAL BY JURY"—PRESENCE OF JUDGE.

The constitutional right to "trial by jury" in federal courts means a trial by 12 men, presided over by a judge.

[Ed. Note.—For other cases, see Jury, Cent. Dig. § 14; Dec. Dig. ⚷9.]

For other definitions, see Words and Phrases, First and Second Series, Trial by Jury.]

In Error to the District Court of the United States for the Southern District of New York.

Criminal prosecution by the United States against Albert Freeman. Judgment of conviction, and defendant brings error. Reversed.

See, also, 204 Fed. 1006, 122 C. C. A. 663.

This cause comes here on writ of error to the United States District Court for the Southern District of New York. The questions raised relate to the indictments, trial, verdict, sentence, and bill of exceptions in the prosecution by the United States against Albert Freeman, who was indicted and tried with William J. Morton, Julian Hawthorne, Josiah Quincy, and John McKennon who were jointly indicted in five different indictments. The indictments charged the defendants with having unlawfully and willfully con-

spired against the United States, and with having agreed together to devise a scheme and artifice to defraud diverse persons, whose names were unknown, of their money and property, by inducing, by false and fraudulent representations and pretenses, such persons to part with their money and property in the purchase of shares of the capital stock of certain mining corporations, and for using the post office establishment of the United States for the purpose of executing their fraudulent scheme.

The defendant Freeman was found guilty on all of the counts of all of the indictments except those abandoned by the government, and the conspiracy count of one of the indictments. A verdict of not guilty was directed in behalf of the defendant Quincy on all counts of all indictments, except a conspiracy count in one indictment, and on that count the jury returned a verdict on his behalf of not guilty. The defendants Hawthorne and Morton were found not guilty on all the counts of one of the indictments, but guilty on all other counts of all other indictments except those abandoned by the United States. Freeman was sentenced to five years' imprisonment on certain counts, and on the other counts upon which he was convicted sentence was suspended. Hawthorne and Morton were each sentenced to imprisonment for one year and one day. Thereupon the United States attorney moved that the term of the court be extended for five years as to each count on which sentence was suspended, and the motion was granted. Neither Hawthorne nor Morton took out a writ of error, and each has served out his sentence. Freeman has served no part of his sentence and is out on bail in the sum of $150,000.

Wilson B. Brice, of New York City (Thomas W. Proctor and Damon E. Hall, both of Boston, Mass., of counsel), for plaintiff in error.

H. Snowden Marshall, U. S. Atty., and Goldthwaite H. Dorr and Claude A. Thompson, Sp. Asst. U. S. Attys., all of New York City.

Before LACOMBE, WARD, and ROGERS, Circuit Judges.

ROGERS, Circuit Judge. The defendant, having been convicted and sentenced to five years' imprisonment, comes into this court complaining of various errors which he alleges occurred during his trial. The trial in some respects was a remarkable one and lasted for four months. The evidence is voluminous and the record is contained in ten large volumes of 7,000 printed pages. The charge of the trial judge covers 87 pages and the requests to charge, on behalf of the defendant, were 86. The defendant has filed 210 assignments of error, and the court is asked especially to consider 91 of these assignments. But before considering any of these alleged errors it is necessary to consider a motion that the writ of error be dismissed.

[1, 2] It is claimed by the government that as the transcript of record was not filed in this court during the term next succeeding the return day named in the citation and writ of error, this court is without jurisdiction to hear the case. It is also averred that there is no lawful bill of exceptions before the court, as the District Judge did not sign and settle the same during the term at which the judgment of conviction was entered. Judgment of conviction was entered on March 14, 1913; writ of error was sued out on March 24, 1913; the citation was returnable on April 23, 1913; the bill of exceptions was noticed for settlement on December 12, 1914, and was settled on February 24, 1915, over the government's objection that the term of the court at which the judgment was entered had long since expired. The transcript of record was not filed in this court until April 27, 1915, and on

April 23d the government moved to dismiss the writ of error. We postponed argument on the motion until the case could be heard on the writ of error, preferring to hear argument on the whole case at the same time.

We will consider first the motion to dismiss on the ground that the court is without jurisdiction, because of the failure of the defendant to file the transcript of record within the proper time. The jurisdiction of this court can be exercised only over the matters committed to it by the statutes of the United States and only on the terms and in the manner provided by the statutes. Revised Statutes, § 997 (Comp. St. 1913, § 1653), provides that:

"There shall be annexed to and returned with any writ of error for the removal of a cause, at the day and place therein mentioned, an authenticated transcript of the record, an assignment of errors, and a prayer for reversal, with a citation to the adverse party."

And rule 16 of this court provides that:

"It shall be the duty of the plaintiff in error or appellant to docket the case and file the record thereof with the clerk of this court by or before the return day mentioned, whether in vacation or in term time. But for good cause shown the justice or judge who signed the citation, or any judge of this court, may enlarge the time by or before its expiration, the order of enlargement to be filed with the clerk of this court." 188 Fed. xi, 109 C. C. A. xi.

The rule then goes on to provide that, if the plaintiff in error or appellant fails to comply with the rule, the defendant in error or appellee may have the cause dismissed. Rule 16 of this court is substantially the same as rule 9 of the Supreme Court of the United States. 29 Sup. Ct. vii.

The time for filing the transcript in the case at bar had been extended from time to time by court order or by stipulation of counsel until September 15, 1913. At that time, or about that time, the case was by the order of this court, or of one of its judges, placed on the calendar, with the consent of the attorneys on both sides, and with full knowledge that the transcript had not been filed. The Supreme Court has in numerous cases announced that it has no jurisdiction to hear and determine a case where the transcript has not been filed during the term next succeeding that in which the writ of error was sued out or the appeal was taken. Antonio Maria Peralta v. State of California, 235 U. S. 686, 35 Sup. Ct. 203, 59 L. Ed. 425 (1914); Green v. Elbert, 137 U. S. 615, 11 Sup. Ct. 188, 34 L. Ed. 792 (1890); Richardson v. Green, 130 U. S. 104, 9 Sup. Ct. 443, 32 L. Ed. 872 (1888); Credit Company v. Arkansas Central Ry. Co., 128 U. S. 258, 9 Sup. Ct. 107, 32 L. Ed. 448 (1888); Hill v. Chicago, etc., Ry. Co., 129 U. S. 170, 174, 9 Sup. Ct. 269, 32 L. Ed. 651 (1889); Norton v. Commissioners, etc., 129 U. S. 505, 9 Sup. Ct. 331, 32 L. Ed. 784 (1889); Fayolle v. Texas & Pacific R. Co., 124 U. S. 519, 8 Sup. Ct. 588, 31 L. Ed. 533 (1888); Radford v. Folsom, 123 U. S. 725, 8 Sup. Ct. 334, 31 L. Ed. 292 (1887); Caillot v. Deetken, 113 U. S. 215, 5 Sup. Ct. 432, 28 L. Ed. 983 (1885); State v. Demarest, 110 U. S. 400, 4 Sup. Ct. 25, 28 L. Ed. 191 (1884); The Tornado, 109 U. S. 110, 3 Sup. Ct. 78, 27 L. Ed. 874 (1883); Mussina v. Cavazos, 6 Wall. 355, 358, 18

L. Ed. 810 (1868); Mesa v. United States, 2 Black, 721, 17 L. Ed. 350 (1862); United States v. Fremont, 18 How. 30, 15 L. Ed. 302 (1855).

In Mussina v. Cavazos, supra, Mr. Justice Miller explained the ground on which the decisions are based by saying that they rest on the general principle that all writs which have not been served, and under which nothing has been done, expire on the day to which they are made returnable.

"They no longer," he said, "confer any authority; an attempt to act under them is a nullity; and new writs are necessary, if the party wishes to proceed."

In Grigsby v. Purcell, 99 U. S. 505, 507, 25 L. Ed. 354 (1878) Mr. Chief Justice Waite, speaking for the court, declared:

"It by no means follows, as seems to be supposed by counsel who resist this motion, that if parties appear and without objection go to a hearing in a cause docketed after the return term, our judgment will be void for want of jurisdiction. The real objection is not that this court has no jurisdiction, but that the plaintiff in error, or the appellant, as the case may be, has failed to duly prosecute his suit; and this objection may be taken advantage of by the court upon its own motion, or by the appellee or the defendant in error at any time before hearing."

In that case the appeal was granted on February 23, 1875, the transcript of record was not filed until August, 1876, and the appeal was dismissed. The Supreme Court, in laying down the rule that the transcript must be filed during the term next succeeding the allowance of the writ of error or of the appeal, nevertheless recognizes that the rule is subject to exceptions. In United States v. Gomez, 3 Wall. 752, 763, 18 L. Ed. 212 (1865), Mr. Justice Clifford says that certain exceptions to the rule are recognized and allowed, "which are as well established as the rule itself." The exceptions which he names are: (1) Where the party who takes the appeal is prevented from obtaining the transcript by the fraud of the other party; (2) where he is prevented from obtaining the transcript by the order of the court; (3) or where he is prevented from obtaining it by the contumacy of the clerk. In such cases the failure to file within the prescribed period will not be regarded by the court as fatal if it appears that the appellant has not been guilty of laches or want of diligence. In that case the appeal was allowed August 25, 1862, and the transcript was filed on February 29, 1864. The petition was dismissed.

We do not understand that the exceptions to the rule above enumerated are intended as necessarily exclusive of all others. For in Bingham v. Morris, 7 Cranch, 99, 3 L. Ed. 281 (1812), a motion was made to dismiss a writ of error for not filing the transcript of the record within the time fixed by the general rule, and the court overruled the motion and said that they "did not consider the rule as applying to any case where the transcript shall have been filed before the motion for dismissal." In Green v. Elbert, supra, Chief Justice Fuller, in applying the rule, mentions the fact that delay on the part of opposing counsel in asking to have the case dismissed because of failure to file the transcript as required "has sometimes been referred to as an ele-

ment in combination with others, justifying leniency in its disposition. In that case the term during which the transcript should be filed closed May 14, 1888. The transcript reached the clerk on May 10, 1888. But under the rule it could not be filed until the fee was paid, and the fee was not paid until January 13, 1890. The transcript was filed as of that date and the cause docketed. The court held the laches was too gross to be passed over, as the counsel was a member of the bar of the court and knew that the rule required the payment of the fee. In Grigsby v. Purcell, supra, the court pointed out that:

"To entertain the cause under such circumstances [failure to file according to the rule] would be to encourage an addition to the already burdensome delay necessarily attendant upon litigation in this court on account of the crowded state of the docket. Instead of this, we should, as we do, insist on promptness and activity by all who come here to obtain a re-examination of judgments and decrees against them."

But the rule may sometimes operate to create still longer delay and additional expense. For the court has, on several occasions, in dismissing a case because of the failure to file the transcript within the time allowed by the rule, pointed out that the dismissal would not deprive the party of his right to begin his appeal de novo, provided he did so within the time allowed for the taking of appeals. See United States v. Curry, 6 How. 106, 12 L. Ed. 363 (1848); Steamer Virginia v. West, 19 How. 182, 15 L. Ed. 594 (1856).

We pass on to consider the construction which the Circuit Courts of Appeals have placed upon the rules which they have established governing appeals coming from the District Courts.

The Fourth Circuit, in Pender v. Brown, 120 Fed. 496, 56 C. C. A. 646 (1903), dismissed the writ of error on the ground that it had no jurisdiction, as the writ, together with the record, had not been returned to the next ensuing term to which it was made returnable; no sufficient cause having been shown why it had not been so returned. There is no discussion of what would constitute sufficient cause. And the same court took similar action as to an appeal for a like reason in Williams Bros. v. Savage, 120 Fed. 497, 56 C. C. A. 647 (1903).

The Fifth Circuit, in Freeman v. Clay, 48 Fed. 849, 1 C. C. A. 115 (1891), held that the citation on appeal must be made returnable not exceeding 30 days from the day of signing, whether the return day fall in vacation or in term time, but that a defect in such particulars is cured by the filing of the transcript and an entry of a regular appearance by appellees' counsel. "No injury," said the court, "to appellees has resulted." In State of Florida v. Charlotte Harbor Phosphate Co., 70 Fed. 883, 886, 16 C. C. A. 682 (1895), the same court held that the rules of the Circuit Court of Appeals in regard to the return day of appeals and to the filing of the transcript are directory, and that it is within the sound discretion of the court to relieve parties who have not complied therewith. That court had the matter before it again in Love v. Busch, 142 Fed. 429, 431, 73 C. C. A. 545 (1906). The transcript had not been filed within the time fixed by the rules of the court, and the citation in error was not made returnable within the required period. On both grounds the court was asked to dismiss

the bill, and declined to do so on either ground, although it was ordered dismissed on the merits. The court said:

"In either case our rules have not been complied with; but we notice that the appellees have duly appeared, and that no injury has resulted from the noncompliance with the rules, and as they are directory, and not jurisdictional, we are doubtful as to the justice of applying any penalty, and particularly such a harsh penalty as would be the dismissal of the appeal."

The Sixth Circuit, Judges Taft and Lurton, in Altenberg v. Grant, 83 Fed. 980, 28 C. C. A. 244 (1897), held that a writ of error will not be dismissed by the Circuit Court of Appeals because return thereof is not made until one day after it is returnable by its terms. Judge Taft said:

"Nor do we regard the objection that the writ was returned and the record filed here one day after it was made returnable of serious moment. Bingham v. Morris, 7 Cranch, 99 [3 L. Ed. 281], shows that, if the transcript of the record is filed before the motion for dismissal, the motion will not be granted."

The Seventh Circuit in Chicago Dollar Directory Co. v. Chicago Directory Co., 65 Fed. 463, 466, 13 C. C. A. 8 (1895), held that an appeal would not be dismissed where the copy of the record was not filed with the clerk of the appellate court within 30 days from the time the order was entered in the court below, where the transcript was subsequently filed unless a motion to docket and dismiss had been previously made.

The Eighth Circuit, in McClellan v. Pyeatt, 49 Fed. 259, 1 C. C. A. 241 (1892), held that where the citation is made returnable 60 days after its date (as allowed by the rule) and the writ of error on a day named which is less than 60 days therefrom, the writ will not be dismissed, where the record is filed thereafter, but within 60 days, though the rule requires the record to be filed "by or before the return day." The same court, in Incorporated Town of Gilman v. Fernald, 141 Fed. 940, 72 C. C. A. 666 (1905), Judges Sanborn, Hook, and Adams, held that where a transcript of the record is filed in the Circuit Court of Appeals within 60 days from the signing of the citation and within the time specified therein, but after the return day of the writ of error and the failure to file it before that return day has not continued the hearing of the case over any term of court, and no motion to dismiss the writ is made until the expense of printing the transcript has been incurred, the writ will not be dismissed.

This review of the decisions shows that there is not absolute unanimity in the federal courts as to the rule regarding the filing of the transcript and the exceptions to be made to it. But upon careful consideration of all the unusual circumstances of this extraordinary case this court does not think that the government is entitled to have the case dismissed on the ground that the writ of error has become functus officio because of the failure of the plaintiff seasonably to prosecute this appeal. The writ was not functus officio when the case was ordered on the calendar. The action of the court in placing it on the calendar and continuing it there with knowledge that the transcript had not been filed was an act done under the writ of error and which

prevented it from becoming functus officio. It amounted to an extension of the time for the filing of the transcript. And if it was an extension of time, as no specific time was mentioned, it must be construed as permission to file within a reasonable time, or until the court should withdraw its permission by making an order to that effect. And the transcript was subsequently filed, no order to the contrary ever having been made by the court.

We think that in view of all that has taken place, including the acquiescence and consent of the government up to the time this motion was made, the case should not now be dismissed. The counsel for the government has appeared before the court in this case on numerous occasions with knowledge that the transcript was not filed and without any objection on that account. At the time the case was ordered on the calendar he stated to this court in substance that he had been served with the plaintiff's preliminary brief, that a bound copy of the record had been delivered to the clerk as the court had ordered, that the exhibits had not yet been printed, but that the delay was not due to any fault of the plaintiff's counsel, but was purely due to the extraordinary size of the record. We have no doubt of the truth of the statement, and we are not satisfied that the delays which subsequently occurred were of such a nature as entitle the government to have the case dismissed. The publication of the record was completed within the stipulated time, except volume 10, which contained the exhibits, and the delay in the publication of that volume was due in part to the inability of the counsel on both sides to agree on what exhibits should be included, and because of delay of counsel for the government in furnishing the plaintiff's counsel with the exhibits which were to be printed. Before the volume containing the exhibits was printed, the record could not be certified by the District Judge, and could not be filed in the office of the clerk of this court. During this period an application was made to this court in April, 1914, for a writ of prohibition, to be directed to the District Court, restraining that court from entering an order vacating the judgment of conviction and granting a new trial. Thereupon this court certified certain questions arising upon the application to the United States Supreme Court, which were answered on November 16, 1914. United States v. Mayer, 235 U. S. 55, 35 Sup. Ct. 16, 59 L. Ed. 129 (1914). This no doubt complicated the situation and delayed to some extent the prosecution of the case in this court.

The counsel for the government has not been misled in any stage of these proceedings, has not supposed at any time that the prosecution had been abandoned, had no reason for complaining of unreasonable delay, and any delay which has occurred since the bill of exceptions was, as we hold, validly settled, has not led to the continuance of the case over any term of the court. The motion to dismiss, made under the above circumstances and after $10,000 has been expended in printing the record, and after a delay for which the government's counsel is not free from fault, cannot be granted. This brings us to consider the second objection, that there is no proper bill of exceptions before the court.

[3] It is undoubtedly within the power of a court during the judgment term to enter an order extending the term, and thus take the case out of the operation of the general rule that the power to reduce exceptions to form and have them signed and filed is, under ordinary circumstances, confined to the term at which the judgment is rendered. When a term has been so extended, the Supreme Court has said:

"It may be further extended by another order, made after the expiration of the original limits of the term."

That court has also more than once expressed the opinion that by *consent of the parties* a bill of exceptions might be signed and filed after the term expired. Muller v. Ehlers, 91 U. S. 249, 251, 23 L. Ed. 319 (1875); Michigan Insurance Bank v. Eldred, 143 U. S. 293, 298, 12 Sup. Ct. 450, 36 L. Ed. 162 (1892); Ward v. Cochran, 150 U. S. 597, 14 Sup. Ct. 230, 37 L. Ed. 1195 (1893). And in Jennings v. Philadelphia, Baltimore & Washington R. R. Co., 218 U. S. 255, 257, 31 Sup. Ct. 1, 2, 54 L. Ed. 1031 (1910), the court said:

"So grave a matter as the allowance of a bill of exceptions after the close of the term, and after the court had lost all judicial power over the record, should not rest upon a mere implication from silence. There should be express consent, or conduct which should equitably estop the opposite party from denying that he had consented."

The record in the case at bar discloses that from time to time the court by its orders extended the time to settle the bill of exceptions. The parties by stipulation have also on numerous occasions extended the time. The conduct of the government between the time of the judgment of conviction and the time of the making of the motion to dismiss has been such as makes it inequitable to assert that defendant is in default as to the settlement of the bill of exceptions. The attorney for the United States requested the defendant's counsel not to complete the record for this court until the briefs were printed, and the government's brief was not printed and served on the defense until May 1, 1915. That defendant has proceeded in the matter in good faith is clear, and the unusual delay is accounted for by the extraordinary circumstances which excuse it. The government, through its counsel, has to some extent caused the delay by its own remissness in furnishing exhibits which it desired printed in the record, and it has acquiesced in the delay to a degree which amounts to an implied agreement that the time should be extended.

[4] Moreover, when the court extended the term for five years on the counts upon which sentence was suspended, it had the effect of extending the term on the conviction as a whole, assuming that the court was properly organized and had power to extend the term at all. A conviction of a defendant on various counts does not result in separate judgments, but in a single judgment. Where indictments are consolidated for trial, as was done in this case, the case is the same as one in which the separate offenses are charged in different counts of the same indictment. The statute identifies the two cases. U. S. Comp. St. 1913, § 1690. It is evidently contemplated that, where offenses are grouped and tried together, there shall be but a single judgment. The case is analogous to a civil action in which

a number of causes of action are joined in the same complaint. In such a case there is but a single judgment for the whole amount to which the plaintiff established his right. In People ex rel. Tweed v. Liscomb, 60 N. Y. 559, 575, 19 Am. Rep. 211 (1875), the New York Court of Appeals, in speaking of cases in which it has been held that distinct offenses can be joined in separate counts in the same indictment, said:

"It is safe to say, however, that these cases do not necessarily warrant the conclusion that a conviction for several offenses thus charged is the equivalent of several separate convictions upon distinct indictments as authorizing several distinct judgments."

The court also said:

"Congress has thought it necessary to provide, by statute, for the joinder of several charges against the same person for the same act or transaction, or for two or more acts or transactions of the same class of crimes or offenses in one indictment in several counts, but no provision is made for several judgments on one record."

The doctrine laid down in the Tweed Case that sentences cannot be cumulative is not followed in the federal courts. But the doctrine, which that case also announced, that there can be but one judgment, has not, so far as we are informed, been repudiated by any federal court. That doctrine has been upheld by the Supreme Court in In re Henry, 123 U. S. 372, 375, 8 Sup. Ct. 142, 143 (31 L. Ed. 174) (1887), where Chief Justice Waite said:

"Under the present statute three separate offenses, committed in the same six months, may be joined, but not more, and when joined there is to be a single sentence for all."

This was adhered to in In re De Bara, 179 U. S. 316, 21 Sup. Ct. 110, 45 L. Ed. 207 (1900), and the court held that the court below had the power to give a single sentence for several offenses, in excess of that which the statute prescribed for one offense.

As the defendant has not lost his right to have reviewed that part of the conviction upon which sentence was suspended, it must follow, if the judgment is single, that he has not lost his right to have reviewed that part upon which sentence was imposed. If it were not so, it would result that, if this court dismissed the writ of error as to the counts upon which sentence was imposed, while it sustained the writ of error upon the merits as to the counts upon which sentence was suspended, reversing the judgment of conviction on those counts on the ground that defendant was not tried by a constitutional tribunal, he would enter upon a term of five years' imprisonment under a judgment pronounced by an unconstitutional court, which this court could not review.

The motion to dismiss on the ground that there is no proper bill of exceptions before the court must also, for the reasons above stated, be denied.

[5] This brings us to a consideration of the merits of the case. The most important question presented, and in fact the only remaining question we find it necessary to pass upon, is whether the defendant has been convicted of the crimes for which he was tried in a

manner which the law of the land sanctions. It is claimed on his behalf that under the Constitution of the United States a trial by jury is guaranteed to him, and that he has not had such a trial, because of the substitution of one judge for another during the trial. The question is one of great importance. So far as we are informed, the question has never before been raised in a federal court whether one judge can be substituted for another in a criminal trial, either with or without the consent of the accused.

When our forefathers emigrated to this country from England, they brought with them trial by jury as a defense against the exercise of arbitrary power. The trial by jury is referred to in Bacon's Abridgment, under the title "Juries," as one of the chief excellencies of the British Constitution. Like that Constitution the jury seems to have been a gradual growth and development. It has been denominated "the favorite child of the English law." The modes of trial of which Glanvil speaks are the judicial combat, compurgation, and the ordeal of hot iron, where the suspected person was a freeman, and of water where he was a "villian." And Forsyth, in his work on Jury Trial, p. 159, tells us that he finds no trace of anything like a jury impaneled to try offenders before the time of the Normans.

"Nor for many years after the Conquest," he adds, "do the scanty notices which occur in the old chronicles of persons convicted and punished for crime furnish a hint of the existence of such a tribunal."

But by the time of the reign of Henry VII, Hallam says:

"The fact of guilt or innocence on a criminal charge was determined in a public court, and in the county where the offense occurred, by a jury of twelve men, from whose unanimous verdict no appeal could be made."

The English-speaking peoples the world over have this year commemorated the seven hundredth anniversary of the signing of Magna Charta. That instrument declared that no freeman should be deprived of life or liberty "but by the judgment of his peers or by the law of the land," and this has been expounded as referring to a trial of all persons by a jury of twelve men, although strictly speaking it is more likely that it referred to the trial of the barons by their peers. The Constitution of the United States as originally adopted provides in the third article as follows:

"The trial of all crimes, except in cases of impeachment, shall be by jury."

The First Congress, however, in September, 1789, proposed to the Legislatures of the several states ten amendments, which were promptly ratified. The fifth amendment provides that:

"No person shall be * * * deprived of life, liberty, or property, without due process of law."

The sixth amendment provides that:

"In all criminal prosecutions, the accused shall enjoy the right to a speedy and public trial, by an impartial jury."

The seventh amendment provides that:

"In suits at common law, where the value in controversy shall exceed twenty dollars, the right of trial by jury shall be preserved."

All the above provisions operate simply as restraints and limitations upon the powers of the government of the United States. But as the state Constitutions also secure to persons accused of crime a right to a trial by jury under provisions more or less similar, the decisions of the state courts, as well as those of the federal courts, may be consulted in seeking to discover the meaning of the constitutional guaranty.

The right to trial by jury has been placed in this country upon what Mr. Justice Story in his Commentaries calls "the high ground of constitutional right," and he declares that the inestimable privilege of trial by jury is conceded by all "to be essential to political and civil liberty." The right is one justly dear to our people, and as a social, political, and judicial institution it is deserving of the solicitude with which it has been regarded by all Anglo-Saxon peoples.

The defendant is accused of a crime for which he is entitled to trial by jury within the meaning of the third article of the Constitution of the United States. The Supreme Court in Callan v. Wilson, 127 U. S. 540, 8 Sup. Ct. 1301, 32 L. Ed. 223 (1888), construed that article as embracing, not only felonies punishable by confinement in the penitentiary, but also some classes of misdemeanors, the punishment of which may involve the deprivation of the liberty of the citizen.

[6] Before going further, it is desirable to consider what "trial by jury" means. While the Constitution of the United States and the Constitutions of the states secure a trial by jury, they do not define its meaning. Lord Hale in his History of the Common Law (Runnington's Ed. 1792) p. 291, calls attention to the fact that one of the excellencies of trial by jury lies in the fact that "the judge is always present at the time of the evidence given in it," and that he is able, "in matters of fact, to give them great light and assistance, by his weighing the evidence before them and observing where the question and knot of the business lies, and by showing them his opinion, even in matters of fact, which is a great advantage and light to laymen." In Hale's Pleas of the Crown, vol. 1, p. 33, it is written:

> "The law of England hath afforded the best method of trial, that is possible, of this and all other matters of fact, namely, by jury of twelve men all concurring in the same judgment by testimony of witnesses viva voce in the presence of the judge and jury and by the inspection and direction of the judge."

In Lamb v. Lane, 4 Ohio St. 167, 179 (1854), the court "after a careful examination of the subject" announced that it was clearly of the opinion that the word "jury," where it occurs in the state Constitution, "means a tribunal of twelve men, presided over by a court and hearing the allegations, evidence and arguments of the parties." And the opinion was expressed that twelve men "can never be properly regarded as a jury" unless presided over by a court, and that a "presiding law tribunal is implied, and that the conjunction of the two is the peculiar and valuable feature of the jury trial." The Supreme Court of the United States has expressed the same

idea. In Capital Traction Co. v. Hof, 174 U. S. 1, 13, 19 Sup. Ct. 580, 585, 43 L. Ed. 873 (1889), the court said:

"'Trial by jury,' in the primary and usual sense of the term at the common law and in the American Constitutions, is not merely a trial by a jury of twelve men before an officer vested with authority to cause them to be summoned and impaneled, to administer oaths to them and to the constable in charge, and to enter judgment and issue execution on their verdict; but it is a trial by jury of twelve men, in the presence and under the superintendence of a judge empowered to instruct them on the law and to advise them on the facts, and (except on acquittal of a criminal charge) to set aside their verdict if in his opinion it is against the law or the evidence. This proposition has been so generally admitted, and so seldom contested, that there has been little occasion for its distinct assertion."

It being settled that the accused is entitled under the Constitution to trial by jury, and that trial by jury involves in the federal courts a trial by twelve men presided over by a judge, it is necessary to consider whether one accused of crime can consent or waive his constitutional rights as to the tribunal by which he is to be tried.

As the Constitution specifically declares that "the trial of all crimes * * * *shall be by jury,*" it is difficult to see how it can be maintained that the trial of a crime in a federal court need not be by jury, provided the accused person consents to be tried in some other manner. The question of how he shall be tried does not seem open to his determination but appears to have been settled for him by the mandatory provision of the Constitution of the United States, however it might be under the Constitution of a state differently worded. It is necessary, too, to have in mind that the trial of one charged with crime affects not merely the rights of the accused but the public interests. As Blackstone expressed it—4 Commentaries, p. 189—"the king has an interest in the preservation of all his subjects." The Declaration of Independence declares that all men are endowed by their creator with certain *inalienable* rights; that among these are life, *liberty,* and the pursuit of happiness. In his great work on Constitutional Limitations, p. 576, Judge Cooley, discussing waiver of rights, said that:

Consent in a criminal case cannot bind the defendant "since criminal charges are not the subject of arbitration, and any infliction of criminal punishment upon an individual, except in pursuance of the law of the land, is a wrong done to the state, whether the individual assented or not."

This is the view taken by the Supreme Court of the United States. In Crain v. United States, 162 U. S. 625, 16 Sup. Ct. 952, 40 L. Ed. 1097 (1896), that court set aside a judgment of conviction of forgery and a sentence of imprisonment for three years because the record did not affirmatively show that the accused had been formally arraigned, or that he pleaded to the indictment, although it showed that the jury had been duly selected, impaneled and sworn "to try the issue joined," and that after hearing the evidence and argument they retired to consider of their verdict, which they subsequently returned into court. The government claimed that it should be assumed that the defendant had pleaded not guilty, and that the failure of the clerk to record the fact was a clerical error, which did not prejudice

substantial rights. Mr. Justice Harlan, writing the opinion of the court, said:

"In Hopt v. Utah, 110 U. S. 574, 579 [4 Sup. Ct. 202, 28 L. Ed. 262], this court, observing that the public has an interest in the life and liberty of an accused person, said: 'Neither can be lawfully taken except in the mode prescribed by law. That which the law makes essential in proceedings involving the deprivation of life or liberty cannot be dispensed with or affected by the consent of the accused, much less by his mere failure, when on trial and in custody, to object to unauthorized methods.'"

And then Justice Harlan added:

"The present defendant may be guilty, and may deserve the full punishment imposed upon him by the sentence of the trial court. But it were better that he should escape altogether than that the court should sustain a judgment of conviction of an infamous crime where the record does not clearly show that there was a valid trial."

In Low v. United States, 169 Fed. 86, 94 C. C. A. 1 (1909), Mr. Justice Lurton said:

"The right to waive a right does not exist when the matter concerns the public as well as the individual. * * * It is not competent for the accused and the district attorney to change by consent the constitution of the tribunal provided for the trial of crimes. Between the waiver of a jury in a civil case and its waiver in a trial for crimes there are fundamental differences. The one involves only property rights of the parties, rights over which they have dominion. The other involves the liberty or life of the citizen. This is a matter over which the accused has not dominion. The state, the public, are concerned that neither shall be affected save by due process of law."

An examination of the provisions in the state Constitutions on the subject of trial by jury shows that there is a very general concurrence in the belief that the public interests require that a person accused of felony shall not have the right to waive a jury trial. No other inference can be drawn from the fact that it is expressly provided in many of them that trial by jury may be waived in a civil case, which necessarily implies that it cannot be waived in a criminal case. Thus the Constitution of New York (1894) provides in article 1, § 2, that trial by jury in all cases shall remain inviolate, "but a jury trial may be waived by the parties in all civil cases in the manner to be prescribed by law." The same provision is found in identical language in the Constitution of 1846. And the Constitution of Pennsylvania provides in article 5, § 27, as follows:

"The parties, by agreement filed, may, in any civil case, dispense with trial by jury, and submit the decision of such case to the court having jurisdiction thereof, and such court shall hear and determine the same; and the judgment thereon shall be subject to a writ of error, as in other cases."

The Constitution of California (1879), article 1, § 7, provides that a trial by jury may be waived in all criminal cases, not amounting to felony, by the consent of both parties expressed in open court. The Constitution of Idaho (1889), article 1, § 7, contains a similar provision. In Vermont the Constitution provides in article 10 that in all prosecutions for criminal offenses a person has a right to a speedy trial by an impartial jury "without the unanimous consent of which jury, he cannot be found guilty." The Constitution of the state of Washington (1889) provides in article 1, § 21:

"The right of trial by jury shall remain inviolate, but the Legislature may provide for a jury of any number less than twelve in courts not of record, and for a verdict by nine or more jurors in civil cases in any court of record, and for waiving of the jury in civil cases where the consent of the parties interested is given thereto."

In the Constitution of Montana (1889) article 3, § 23, it is provided that:

The right of trial by jury shall be secured to all and remain inviolate, "but in all civil cases and in all criminal cases not amounting to felony, upon default of appearance or by consent of the parties expressed in such manner as the law may prescribe, a trial by jury may be waived, or a trial had by any less number of jurors than the number provided by law."

The Constitution of Virginia (1902), article 1, § 8, after providing that in all criminal prosecutions the accused shall be entitled to a speedy trial by an impartial jury of his vicinage, declares that:

"In any criminal case, upon a plea of guilty, tendered in person by the accused, and with the consent of the attorney for the commonwealth, entered of record, the court shall, and in a prosecution for an offense not punishable by death, or confinement in the penitentiary, upon a plea of not guilty, with the consent of the accused, given in person, and of the attorney for the commonwealth, both entered of record, the court, in its discretion, may hear and determine the case, without the intervention of a jury."

While the constitutional provisions of the states have no application to trial in the federal courts for offenses committed against the United States, they are nevertheless interesting as showing the deep-seated conviction of the people of various commonwealths that the life and the liberty of the citizens of this country should be protected by the courts against forfeiture, except in accordance with the established principles of law, which cannot be waived by the voluntary action of the individual.

In connection with this consideration of the provisions as to trial by jury found in the state Constitutions, it may be remarked that there is nothing in the Constitution of the United States which would preclude the abolition by a state of trial by jury. The fourteenth amendment declares that no state shall "deprive any person of life, liberty or property without due process of law." The Supreme Court of the United States in Frank v. Mangum, 237 U. S. 309, 35 Sup. Ct. 582, 59 L. Ed. 969, decided April 19, 1915, said:

"Repeated decisions of this court have put it beyond the range of further debate that the 'due process' clause of the fourteenth amendment has not the effect of imposing upon the states any particular form or mode of procedure, so long as the essential rights of notice and a hearing, or opportunity to be heard, before a competent tribunal are not interfered with. Indictment by grand jury is not essential to due process. Hurtado v. California, 110 U. S. 516, 532, 538 [4 Sup. Ct. 111, 292, 28 L. Ed. 232]; Lem Woon v. Oregon, 229 U. S. 586, 589 [33 Sup. Ct. 783, 57 L. Ed. 1340], and cases cited. Trial by jury is not essential to it, either in civil cases. Walker v. Sauvinet, 92 U. S. 90 [23 L. Ed. 678]. Or in criminal cases. Hallinger v. Davis, 146 U. S. 314, 324 [13 Sup. Ct. 105, 36 L. Ed. 986]; Maxwell v. Dow, 175 U. S. 581, 594, 602, 604 [20 Sup. Ct. 448, 494, 44 L. Ed. 597]."

The language of the Constitution of the United States respecting the right to trial by jury in civil actions, as provided in the seventh amendment, is different from the language used in the third article

respecting the right to trial by jury in criminal cases. The seventh amendment simply declares that "the right of trial by jury shall be *preserved*" in suits at common law. And the Supreme Court has held that the constitutional right to a jury trial in civil cases is a mere privilege, intended solely for the benefit of the parties litigant, and that the right may be waived. In Bank of Columbia v. Okley, 4 Wheat. 235, 4 L. Ed. 559 (1819), the court in holding that in a civil case the right might be waived, said:

"That this view of the subject is giving full effect to the seventh amendment of the Constitution is not only deducible from the general intent, but from the express wording, of the article referred to. Had the terms been, that 'trial by jury shall be preserved,' it might have been contended that they were imperative, and could not be dispensed with. But the words are that 'the right of trial * * * shall be preserved,' which places it on the foot of a lex pro se introducto, and the benefit of it may therefore be relinquished."

And see Citizens' Gaslight Co. v. Wakefield, 161 Mass. 432, 37 N. E. 444, 31 L. R. A. 457; Joy v. Blum, 55 N. J. Law, 518, 26 Atl. 861; Baird v. New York, 74 N. Y. 382; Claussenius v. Claussenius, 179 Ill. 545, 53 N. E. 1006.

It may be conceded, too, that the right to a jury trial may be waived in trials of persons accused of minor offenses. The constitutional provisions do not extend the right to a jury trial. They only secure it in the cases in which it was a matter of right at common law. Cooley on Constitutional Limitations (7th Ed.) p. 590. Thus in Schick v. United States, 195 U. S. 65, 24 Sup. Ct. 826, 49 L. Ed. 99, 1 Ann. Cas. 585 (1904), the Supreme Court held that a written waiver of a jury by a person prosecuted by information for the violation of a revenue statute was not in conflict with the Constitution of the United States, providing that the trial of all crimes shall be by jury. The decision went upon the ground that the constitutional provision did not apply to petty offenses, and, that being the case, no reason existed why the defendant could not waive trial by jury and consent to trial by the court. There have been a number of decisions in the state courts to the same effect. See Brewster v. People, 183 Ill. 143, 55 N. E. 640; Levi v. State, 4 Baxt. (Tenn.) 289; State v. Alderton, 50 W. Va. 101, 40 S. E. 350; Cassidy v. Sullivan, 64 Cal. 266, 28 Pac. 234; Ex parte Wong You Ting, 106 Cal. 296, 39 Pac. 627; Christensen v. Hollingsworth, 6 Idaho, 87, 53 Pac. 211, 96 Am. St. Rep. 256; Finch v. Kent, 24 Mont. 270, 61 Pac. 653.

Judge Thompson, in his work on Trials (section 6), states the rule:

"While in cases of felony the constitutional right to be tried by a jury of twelve men cannot be waived by the accused, in cases of misdemeanor the rule is different, especially where the punishment is a pecuniary fine merely."

In Hopt v. Utah, 110 U. S. 574, 4 Sup. Ct. 202, 28 L. Ed. 262 (1884), it was held that one indicted for felony must be personally present at the trial; it not being within his power or that of his counsel to waive his presence. But in that case the local Code of Criminal Procedure declared:

"If the indictment is for felony the defendant *must* be personally present at the trial."

The judgment was reversed because of the action of the trial court in permitting certain challenges to jurors, based upon the ground of bias, to be tried out of the presence of the court, the defendant, and his counsel. The accused had not objected at the time, and it was subsequently claimed that by his silence he had consented to what was done. As explained in Frank v. Mangum, supra, the ground of the decision was the violation of the plain mandate of the local statute. As the statute of the territory of Utah declared that he "*must* be personally present," his consent that his trial, or any part of it, might go on without his personal presence could not dispense with what the Code made essential. That was the only question involved.

In Diaz v. United States, 223 U. S. 442, 32 Sup. Ct. 250, 56 L. Ed. 500, Ann. Cas. 1913C, 1138 (1912), it was held that the right of one accused of felony to be confronted with the witnesses was one which the accused might waive; and it was also held that one *who was out on bail and not in custody* might waive his right to be present at the trial and leave the court free to proceed in his absence. In the course of its opinion, written by Mr. Justice Van Devanter, the court, in referring to the right of the accused to be present at the trial, said:

"In cases of felony our courts, with substantial accord, have regarded it as extending to every stage of the trial, inclusive of the impaneling of the jury and the reception of the verdict, and as being scarcely less important to the accused than the right of trial itself. And with like accord they have regarded an accused who is in custody and one who is charged with a capital offense as incapable of waiving the right; the one because his presence or absence is not within his own control, and the other because, in addition to being usually in custody, he is deemed to suffer the constraint naturally incident to an apprehension of the awful penalty that would follow conviction. But where the offense is not capital, and the accused is not in custody, the prevailing rule has been that if, after the trial has begun in his presence, he voluntarily absents himself, this does not nullify what has been done or prevent the completion of the trial, but, on the contrary, operates as a waiver of his right to be present, and leaves the court free to proceed with the trial in like manner and with like effect as if he were present."

The language quoted indicates that in cases of felony one *who is in custody is incapable* of waiving the right to be present at the trial. And in Lewis v. United States, 146 U. S. 370, 13 Sup. Ct. 136, 36 L. Ed. 1011 (1892), the court declared:

"A leading principle that pervades the entire law of criminal procedure is that, after indictment found, nothing shall be done in the absence of the prisoner. While this rule has, at times and in the cases of misdemeanors, been somewhat relaxed, yet in felonies it is not in the power of the prisoner, either by himself or his counsel, to waive the right to be personally present during the trial."

In Frank v. Mangum, supra, what was decided was that, inasmuch as a state might, without infringing the fourteenth amendment, abolish trial by jury, it might limit the effect to be given to an error respecting one of the incidents of such trial; that the presence of the prisoner when the verdict was rendered was not so essential a part of the hearing that a rule of practice permitting the accused to waive it and holding him bound by the waiver amounted to a deprivation of "due

process of law." The accused had been tried in a state court of Georgia and convicted of murder. He was not in the courtroom when the verdict was rendered, his presence having been waived by his counsel and the waiver was accepted and acquiesced in by the court.

In West v. State, 42 Fla. 244, 28 South. 430 (1900), the court said:

> "The common-law rule is that in a trial for felony, if a juror, the judge, or the prisoner become incapacitated by illness or death, after the jury is impaneled and sworn in chief, the proper course to pursue is to declare a mistrial and begin de novo."

This was not, however, a case where one judge was substituted for another, but where, after a full panel of twelve jurors had been selected and sworn, one juror became ill and was excused, and a new juror took his place. There are a number of cases where an attempt has been made to substitute a juror for one of the twelve who have been impaneled to try the case, and where, owing to sickness or some disqualification, one of the original panel has been excused. The rule seems to be well established in such cases that the trial must begin de novo, in order that the defendant may have his full right of challenge, and in order that the new juryman may both see and hear all the witnesses. See The Queen v. Ashe, 1 Cox, C. C. 150 (1845); Dennis v. Mississippi, 96 Miss. 96, 50 South. 499, 25 L. R. A. (N. S.) 36 (1909); State v. Vaughan, 23 Nev. 103, 43 Pac. 193 (1896); State v. Davis, 31 W. Va. 390, 7 S. E. 24 (1888); Cobb v. State, 45 Ga. 11 (1872); Grable v. State, 2 G. Greene (Iowa) 559 (1848); People v. Stewart, 64 Cal. 60, 28 Pac. 112 (1883).

In Cancemi v. People, 18 N. Y. 128 (1858), a leading case on this subject, a juror was withdrawn in pursuance of a stipulation signed by the accused and filed in open court that a verdict might be rendered by eleven jurors and that "the twelve names now appearing of record as the jury in this cause may remain, so that by the record this cause shall appear to have been tried by twelve jurors." The court held this invalidated the trial; the consent of the prisoner being a nullity and the conviction illegal. The court referred to the fact that the state had an interest in the preservation of the liberties and the lives of its citizens and that as a criminal prosecution may result in a forfeiture of the life or the liberty of the accused the consent of the latter "should not be permitted to extend so far as to work radical changes in great and leading provisions as to the organization of the tribunals or the mode of proceeding prescribed by the Constitution and the laws." The opinion points out that consent may in many particulars affect the proceedings; that objections to jurors may be waived; that the court may be substituted for triers to dispose of challenges to jurors; that secondary evidence may be received in place of primary evidence; that admissions of facts may be allowed. "But, when issue is joined upon an indictment, the trial must be by the tribunal and in the mode which the Constitution and laws provide, without any essential change. The public officer prosecuting for the people has no authority to consent to such a change nor has the defendant.

In State v. Kaufman, 51 Iowa, 578, 2 N. W. 275, 33 Am. Rep. 148 (1879), the defendant was indicted for uttering and publishing a

forged promissory note with intent to defraud. One of the jurors during the trial was taken ill, and with the consent of the defendant was discharged, and the trial resumed before eleven jurors. A verdict of guilty was rendered, and then defendant, on the ground that no legal judgment could be rendered on such a verdict, moved in arrest of judgment. The Supreme Court upheld the judgment, and held that one accused of crime could waive the constitutional right to a trial by a jury of twelve men. In the course of its opinion the court said that a conviction could only be legally obtained in a criminal action upon competent evidence, but, if the accused failed at the proper time to object to such as was incompetent, he waived his right to do so. He had, said the court, a constitutional right to a speedy trial, but he could waive it by obtaining a continuance. It added:

"A plea of guilty ordinarily dispenses with a jury trial, and it is thereby waived. This, it seems to us, effectually destroys the force of the thought that 'the state, the public, have an interest in the preservation of the lives and the liberties of the citizens, and will not allow them to be taken away without due process of law.' * * * The defendant may have consented to be tried by eleven jurors, because his witnesses were then present, and he might not be able to get them again, or that it was best he should be tried by the jury as thus constituted. Why should he not be permitted to do so? Why hamper him in this respect? Why restrain his liberty or right to do as he believed to be for his interest? * * * We, however, may remark, without committing ourselves thereto, that it is difficult to see why a defendant may not, with the consent of the court and state, elect to be tried by the court."

The language of the Iowa Constitution (article 1, § 9) was:

"The right of trial by jury shall remain inviolate, * * * but no person shall be deprived of life, liberty, or property, without due process of law."

It will be observed that this language differs materially from that used in the Constitution of the United States.

The Supreme Court of the United States held, in Thompson v. Utah, 170 U. S. 343, 18 Sup. Ct. 620, 42 L. Ed. 1061 (1898), that one charged with the crime of grand larceny cannot waive his right to be tried by a jury of less than twelve men. The jury referred to in the original Constitution and in the sixth amendment is a jury constituted as it was at common law, of twelve persons, neither more nor less. The court in its opinion said:

"It is said that the accused did not object, until after verdict, to a trial jury composed of eight persons, and therefore he should not be heard to say that his trial by such a jury was in violation of his constitutional rights. It is sufficient to say that it was not in the power of one accused of felony, by consent expressly given or by his silence, to authorize a jury of only eight persons to pass upon the question of his guilt. * * * If one under trial for a felony the punishment of which is confinement in a penitentiary could not legally consent that the trial proceed in his absence, still less could he assent to be deprived of his liberty by a tribunal not authorized by law to determine his guilt."

It has been held, too, in a number of cases, that in a criminal case the accused cannot consent to waive the jury and be tried by the court. Williams v. State, 12 Ohio St. 622 (1861); Bond v. State, 17 Ark. 290 (1856); People v. Smith, 9 Mich. 193 (1861); League v. State, 36 Md. 257 (1872).

In State v. Worden, 46 Conn. 349, 33 Am. Rep. 27 (1878), however, the court sustained the constitutionality of a statute which provided that in all prosecutions the party accused, if he should so elect, might be tried by the court instead of by the jury. The Constitution of the state provided that every person accused should "have a speedy public trial by an impartial jury" and also that "the right of trial by jury shall remain inviolate." The prisoner was indicted, tried, and convicted of the crime of rape upon a child under ten years of age. The prisoner requested to be tried by the court, and after conviction moved in arrest of judgment the unconstitutionality of the statute. It was urged on his behalf that the right of an individual to a trial by jury was so interwoven with the interest of the body politic that its surrender was placed beyond the power of the individual. The court thought the particular constitutional provision referred to was "apparently designed to secure personal rights of individuals." And the court attached importance to the phraseology of the clause in the state Constitution as compared with that used in the Constitution of the United States, implying that a different conclusion might have been reached, had the language been such as was used in the federal Constitution.

"We find," said the court, "in the Constitution of the United States, which was in force when our Constitution was framed, the explicit provision: 'The trial of all crimes, except in cases of impeachment, shall be by jury.' It would have been easy for our convention to be equally explicit. The fact that the interests of the public in this regard were not expressly provided for furnishes a strong presumption that it was not intended to place the matter beyond legislative control. With the Constitution of the United States before the convention, the omission is significant."

And on the point that it was contrary to the public interest to allow a waiver of a jury trial in a criminal case the court said:

"We cannot believe that it is wise or expedient to place the life or liberty of any person accused of crime, even by his own consent, at the disposal of any one man or two men, so long as man is a fallible being. * * * We are dealing, not with a question of expediency, but with one of constitutional power. The judiciary has power to declare a statute void for unconstitutionality, and will exercise that power only in clear cases. But we know of no principle of jurisprudence that will justify the court in avoiding a statute on the ground that it is contrary to sound policy. Such a decision would manifestly be an encroachment upon the domain of legislation."

We come now to consider the cases in which a substitution of judges has been made in the course of a criminal trial. In Blend v. People, 41 N. Y. 604 (1870), the accused was indicted for false pretenses. The trial began before the county judge and two justices of the Court of Sessions. In the second day of the trial it was found that one of the justices had left the court and gone to his home. Thereupon another justice qualified to act was called in to fill the vacancy. The record disclosed that:

"No question of any kind was presented to or decided by the court, either for or against the accused, from the time Justice Davidson took his seat until after the jury rendered their verdict."

The Court of Appeals reversed the judgment and ordered a new trial.

"This is not the case," said the court, "where a member of the court leaves the bench for a few moments, intending to return, and does return, but a total abandonment of the trial, in consequence of which one-third of the court is changed; and it is not for us to speculate in regard to the probable injury which might result from the substitution of Davidson. It is sufficient that the prisoner had a right to insist that his trial should proceed before the same court before which it was commenced."

In People v. Shaw, 63 N. Y. 36 (1875), the accused was tried and convicted under the following circumstances: At the beginning of the trial the court was composed of three judges; after the trial had progressed several days, one of the judges absented himself from the court for an entire day, during which the trial proceeded and evidence was taken; he returned the next day and took part in the subsequent proceedings. The counsel for the prisoner, before sentence, moved in arrest of judgment on the ground that no legal court was present to receive the verdict. The Court of Appeals unanimously sustained the point. The court declared that the two judges who were present throughout the trial constituted a competent court, and that there would have been no difficulty, had the third judge not returned and taken part in the subsequent proceedings. The absence of the third judge during a material part of the trial disqualified him from further sitting as a member of the court on that trial. The General Term in its opinion (3 Hun [N. Y.] 272) declared that:

"Where life is involved, the law humanely provides that the prisoner stands upon all his rights, and does not and cannot waive them."

And that:

"The participation of Justice Steere in the trial after his absence from the courthouse, while the whole of Monday's evidence was given, was against the provision of the law and Constitution giving a jury trial before a regularly constituted court, the members of which should hear all the evidence and proceedings. It certainly is against public policy to allow a party to be deprived of his life by a tribunal, of which it can be said, that a portion thereof has not heard the whole evidence and proceedings which result in the sentence of death."

In Hinman v. People, 13 Hun (N. Y.) 266 (1878), the accused had been indicted for grand larceny. He was tried before a court composed of three judges. At the time the jury rendered their verdict only one of the judges was on the bench. One of the two other judges had left the building and the other was in the lower hall. The jury was polled at the request of the counsel for the accused and the verdict was entered on the docket. The court unanimously held that the conviction must be reversed, because when the verdict was received the court was improperly constituted. It was said:

"Receiving the verdict was one, if not the most important, of the proceedings during the trial. It must be received by the court before which the trial was had, and if not the verdict is a nullity, and not authority for the sentence."

In People v. McPherson, 74 Hun, 336, 26 N. Y. Supp. 236 (1893), the accused was charged with petit larceny. A substitution of judges was made after the jury had been selected, the case opened upon the part of the people, and a motion to dismiss had been made on behalf

of defendant at the conclusion of the opening. The Supreme Court declared, through Judge Herrick, that these proceedings "were very important parts of the trial, just as much so as any of the subsequent proceedings." And he added:

"The proposition that a criminal case cannot be partly tried before one magistrate and partly before another seems to me too clear to need argument or citation of authority to sustain it. When the trial of a case is once commenced, it must proceed to the end before the same court and jury."

In Durden v. People, 192 Ill. 493, 61 N. E. 317, 55 L. R. A. 240 (1901), it was held that a prisoner on trial for his life was entitled to the judgment of the judge who had heard the evidence and conducted the trial, and that it was reversible error for the judge who had heard the evidence and part of the argument to leave the bench and substitute another judge of the same circuit, who had not heard the evidence, to hear the remaining argument, give the instructions, and receive the verdict. The substituted judge read to the jury all the instructions given for the defendant. These had been prepared by the judge who retired, but the substituted judge gave all the instructions for the state. The Supreme Court said:

"We think that the plaintiff in error had a right to insist that his trial should proceed before the same judge before whom it was commenced. It is not sufficient that the court or the tribunal was the same by the substitution of another judge of equal power."

And:

"Here, the trial was conducted by two judges, one succeeding the other, and here also, as was the case in Shaw v. People, supra, it is against public policy to allow this plaintiff in error to be deprived of his life by a tribunal, of which one of the sitting judges did not hear the whole evidence and proceedings resulting in the sentence of death against him."

In People v. Henderson, 28 Cal. 465 (1865), the defendant was indicted, tried, and convicted of murder. A substitution of judges took place under the following circumstances: At the close of the testimony the trial judge was informed by telegraph that his presence was immediately required at his home in consequence of the dangerous illness of his family. It was thereupon agreed by all parties, the accused consenting, that the judge of another district might sit during the remainder of the trial. In pursuance of this agreement the judge of the other district appeared at the hour appointed for the opening of the court on the following day and presided till the conclusion of the trial and the rendition of the verdict. He heard the argument, charged the jury, and received the verdict. After the verdict the first judge resumed his seat on the bench and over the objection of the accused pronounced the sentence. The accused claimed in the Supreme Court that it was error for the second judge to be called in after the trial had commenced, and that the accused's consent to the proceeding was without effect. It was also claimed that after the first judge withdrew from the trial it was error for him to resume the bench after the verdict was received, and that he could not impose the sentence. The court overruled both claims and affirmed the judgment. In its opinion the court said that the charge given by the

substitute judge was manifestly adapted to the evidence in the case and "was probably written by the retiring judge." It added:

"Although it is desirable that the same judge who commences the trial should sit until it is completed—and in many cases, doubtless, it would be impracticable to do otherwise—yet, in some instances, as in this, there may be no inconvenience resulting from the taking up of the case by another judge after the testimony closes. And if the parties interested consent to such a course of proceeding, we can see no objection to it. The parties interested are in a condition to judge whether the circumstances of the case are such that they are liable to be affected unfavorably by the change. After deliberately consenting to such a change, and taking the chances of a successful issue, and losing, they cannot be permitted to repudiate the proceedings and avail themselves of the chances of a more favorable result on a second trial."

In People v. Casselman, 10 Cal. App. 234, 101 Pac. 693 (1909), the Court of Appeal for the Second District held that changes in the personnel of several judges presiding at different times during the trial of a defendant accused of forgery did not affect the jurisdiction of the court. It was also held that, in the absence of any showing to the contrary, it must be presumed upon appeal that such changes were for good reasons and were not prejudicially erroneous. It not appearing that defendant objected, it was held that she must be presumed to have assented and to have waived any possible objection. The Supreme Court was asked to grant a rehearing and refused. 10 Cal. App. 234, 101 Pac. 693.

In People v. Hobson, 17 Cal. 429 (1861), the court held, where the judges composing the court of sessions, on motion for a new trial, were not the same judges who composed the court during the trial, one member being different, that defendant, not having objected at the time, waived the objection.

"We think," the court said, "that the ends of justice might generally be better subserved if all the members of the court who heard the case on the trial should sit on the motion for a new trial; but this is not a statutory right or obligation, and it would be going too far if we were to avoid the action of a court legally constituted, and having full jurisdiction of the subject, merely upon the suggestion that it was not so constituted as to the particular members as more probably to insure an intelligent and satisfactory decision. Cases might arise where this point alone, or in connection with other matters, would entitle a party to a new trial, or to a hearing of his motion before the justices presiding on the trial; but in the absence of a showing of some special cause, we think this single circumstance does not constitute a ground of reversal of the judgment."

Mr. Justice Field of the Supreme Court of the United States was at the time the Chief Justice of the California Supreme Court and concurred in the opinion.

The power of a judge to decide a motion for a new trial where the original trial was had before another judge is an entirely different question from the one involved in the case at bar. On that question the Supreme Court of Illinois, in People v. McConnell, 155 Ill. 192, 40 N. E. 608 (1895), sustained the right of a judge to decide a motion for a new trial, where the judge who tried the case died after the verdict, although the same court held it reversible error, as we have seen, to substitute one judge for another during the trial. Durden v. People, supra.

In his great work on Criminal Law Mr. Chitty declares that justices of oyer and terminer, gaol delivery, and of the peace, had power to give judgment by virtue of their respective commissions, but that at common law, by granting a new commission, all the proceedings taken before the former commissioners expired, and therefore, if from any cause a prisoner had been convicted, but judgment delayed or sentenced, and no execution awarded, before former commissioners, no judgment could be given or execution ordered by their successors.

"And," he adds, "there was some reason for this restriction; for the subsequent judges were unacquainted with the circumstances of the case as developed on the trial, and might therefore unconsciously be the occasion of injustice."

But the rule was abolished by St. 11 Henry VI, c. 6, as to justices of the peace, and by St. Edward VI, c. 7, as respected the judges of gaol delivery and oyer and terminer. Chitty's Criminal Law (Ed. of 1816) vol. 1, p. 697. In Charles v. State, 4 Port. (Ala.) 108 (1836), the plaintiff in error, who was a slave, had been found guilty of murder. The judge who presided at the trial died before sentence was imposed. At the next term of court a motion was made for the discharge of the prisoner on the ground that, as a different judge was presiding in the court, there was no power to give a judgment which ought to have been rendered in the preceding term. The Supreme Court thought otherwise, and affirmed the judgment, and said the power to give judgment resided in the court and was derived from the Constitution, and did not depend upon the commission of a particular judge. The court, however, concluded its opinion with the following statement:

"In cases like this, in which the judge who presided at the trial had power to grant a new trial on his own observation of any impropriety in the conduct of the witnesses, or because he did not believe them, it would, perhaps, be most proper for the court to grant a new trial, unless it appeared by evidence, from some source, that the judge before whom the cause was tried was satisfied with the verdict."

In Pegalow v. State, 20 Wis. 61 (1865), it was held that a judge might sentence a prisoner convicted before his predecessor in office. The court points out the fact that in this case the statute fixed the penalty for the crime, leaving nothing to the discretion of the court. And it concludes its opinion as follows:

"Where a discretion was given, there might be some reason for saying that the judge who pronounced the sentence should be acquainted with the circumstances of the case as disclosed at the trial, in order to award the proper degree of punishment. But no such reason can apply here."

And there seems to be considerable authority for saying that, where the jurisdiction of the court is not lost, the judge sitting at a regular term thereof may pass sentence, although the conviction was had at another term and before another judge. See 12 Cyc. 769; Clanton v. State, 96 Ala. 111, 11 South. 299; Lamphere v. State, 114 Wis. 193, 89 N. W. 128; People v. Reilly, 53 Mich. 260, 18 N. W. 849; People v. Felix, 45 Cal. 163; Ledgerwood v. State, 134 Ind. 81, 33 N. E. 631. But in United States v. Harding, 1 Wall. Jr. 127 Fed. Cas. No. 15,301

(1846), the Circuit Court of the United States for the Third Circuit held that it would not impose sentence on a verdict, inasmuch as the judges who then composed the court had all been commissioned subsequently to the verdict; the former judges having died pending a motion for a new trial. In McKeeney v. Wood, 108 Me. 335, 80 Atl. 837, a judge who heard a cause in equity died. Before his death he made an unsigned statement of his findings of fact and rulings thereon, and added a clause, "A final decree to be signed accordingly." But he died without signing the decree. After his death another judge of the same court entered up a decree, basing it upon the memorandum left by his predecessor. The Supreme Court held this to be error. In the course of the opinion the court said:

"The conclusions of the justice hearing the cause may depend, and frequently do depend, not only upon the words of the witness, but upon his manner. The words can be reproduced afterwards; the manner cannot. As was said in Young v. Witham, 75 Me. 536: 'When the testimony is conflicting, the judge has an opportunity to form an opinion of the credibility of witnesses not afforded to the full court. Often there are things passing before the eye of a trial judge that are not capable of being preserved in the record. A witness may appear badly on the stand and well in the record.' "

This language is directly applicable to the substituted judge in the case at bar, whose knowledge of the credibility of a large number of the witnesses was based solely on what he found in the record.

An examination of the cases in the English courts discloses no warrant for believing that such a substitution of judges as took place in the trial of this defendant would be sustained in that country without a trial de novo. The courts of England jealously guard the life and liberty of the subject, and deny to one accused of crime the power to waive the rights which the law secures to persons so situated, and which are given not alone for their protection, but in the public interest. In Sir John Kelyng's Reports of Crown Cases, p. 56, is an account of Lord Dacre's Case, who was tried for treason in 26 Henry VIII. The statement is:

"And the day before all the Judges assembled to resolve certain questions which might arise upon said Tryal, so that if any Question should be asked them, they might resolve una voce and one Question was, whether the Prisoner might waive his Tryal by his Peers, and be tried by the Country; and they all agreed he could not. For the Statute of Magna Charta is in the Negative, Nec super eum ibimus nisi per legale judicium parium fuorum, this is at the King's Suit upon an indictment."

The same was again resolved on the arraignment of Lord Audley in the seventh year of the reign of Charles I; the reason being that that mode of trial was not so properly a privilege of the nobility as that it is a part of the indispensable law of the land like the trial of commoners by commoners. See Woodson's Lectures, vol. 1, 364. And in Coke's Institutes, vol. 3, p. 30, it is said:

"A noble man cannot waive his triall by his peers and put himself upon the triall of the country, that is of twelve freeholders; for the statute of Magna Charta is that he must be tried per pares. And so it was resolved in the Lord Dacre's Case."

In Rex v. Pinney, 5 Car. & P. 254 (1832) the mayor of Bristol was placed on trial upon an information for a neglect of duty in the pre-

vention of a riot and the suppression of a mob. The trial occupied seven days. During the first three days Lord Tenterden was present, but on the remaining days was prevented by illness from being present. The other justices went on with the trial, and the case having been submitted to the jury a verdict of not guilty was returned. The report of the case simply mentions the absence of Lord Tenterden, and it does not appear that any objection was made to going on without him. The case never got beyond the trial court. It is to be observed that no substitution of a new judge was made, that in the absence of a constitutional or statutory provision to the contrary a majority of the judges is a quorum and is sufficient for the transaction of the business of the court, and that the judges present when the verdict was returned had been present throughout the whole of the trial.

In The Queen v. O'Connell, 1 Cox, Cr. Cases, 365, 401, 418 (1843), one of the famous criminal cases of the last century, Mr. Justice Burton, one of the three trial judges, was prevented by illness from being present at the trial, and counsel for the traversers applied for a postponement and objected to proceeding in the absence of one of the justices. The objection was overruled, and the Attorney General was directed to proceed. The case was carried to the House of Lords, 11 Cl. & F. App. Cas. 231, 232 (1844), but counsel there made no reference to the fact that after Justice Burton retired the trial went on without the presence of the full bench. The explanation of the failure to raise the objection must have been due to the fact that no substitution of judges occurred and that a majority of the judges continued present throughout the entire trial.

In 1870, in Reg. v. Jeffreys, 22 Law Times (N. S.) 786, the hearing was before three justices, one of whom was not present until after three of the witnesses had given their evidence, but when he took his place on the bench the evidence which had previously been given was read over to him openly and aloud. Two other witnesses were then examined. One of the three justices then retired, and the decision was given by the other two, one of the two being the justice who took his place after three of the witnesses had given their testimony. The case was a summary hearing of an order to adjudge that the defendant was the father of an illegitimate child, and the hearing was without a jury. The justice made an order of affiliation, and the matter was carried to the Queen's Bench for the purpose of quashing it on the ground that the justices who made the order had not heard the whole of the case. Mellor, J., stated his opinion that:

> "Mr. Perkins"—the justice who came late into the case—"either should not have joined in hearing the case, or they should have resworn the witnesses who were examined before his entrance."

Blackburn, J., said:

> "No doubt where magistrates have to decide on evidence with respect to a bastardy order, or any other case, it is their duty to hear the evidence, and if they have decided without hearing it an objection to their order may on that ground be sustained."

The court, however, held that under the circumstances, the attorney for the defendant not having objected, he was precluded from after-

wards raising objection. The case is important as showing that in the opinion of the court a judge should see and hear the witnesses give their testimony, and that it is not sufficient that he should hear the evidence read to him. The fact that the court thought that the right to object had been waived is in our opinion to be explained by the nature of the proceeding, which, as already mentioned, was of a summary character and without a jury. It does not at all follow that the principle of waiver would be recognized in a case which involved the life or the liberty of an accused person.

In Regina v. Bertrand, L. R. 1 P. C. 520, 534 (1867), a person was tried for a felony in New South Wales, and the jury, not agreeing, were discharged, and a new trial had. On the second trial some of the witnesses at the first trial were resworn, and the evidence given by them at the first trial was read over to them in the presence of the jury and the defendant; liberty being given both to the prosecution and to the defendant to examine and cross-examine. The defendant, having been convicted, carried the case to the Privy Council. He had not objected at the time to the course which had been adopted at the trial. The Privy Council sustained the appeal. In his opinion Sir John Coleridge said:

"Their lordships have no doubt that the whole proceeding was conducted by the able and learned judge who presided with due care for the interests of justice on both sides. In nothing that their lordships shall say do they intend to make the slightest reflection on him nor are they in a condition to say that any injustice to the prisoner resulted from it. Yet it is one of the inconveniences of such a course, that no one in their lordships' position, and called to review the proceeding could be sure of the contrary. It is a mistake, moreover to consider the question only with reference to the prisoner. The object of a trial is the administration of justice in a course as free from doubt or chance of miscarriage as merely human administration of it can be—not the interests of either party. This remark very much lessens the importance of a prisoner's consent, even when he is advised by counsel, and substantially, not, of course, literally, affirms the wisdom of the common understanding in the profession, that a prisoner can consent to nothing. For thus it will be seen that a most important consideration is forgotten—that of the jury charged with deciding on the effect of the evidence. It is essential that no unnecessary difficulty should be thrown in the way of their understanding and rightly appreciating it. The evidence in this case, taken in the usual way on the former trial, had occupied nearly three days. Those of their lordships who have been used, on motions for new trials, to hear the judge's notes of the evidence read, probably know well by experience how difficult it is to sustain the attention, or collect the value of particular parts, when that evidence is long; and one cannot but feel how much more this difficulty must press upon twelve men of the ordinary rank, intelligence and experience of common jurymen. But this is far from all. The most careful note must often fail to convey the evidence fully in some of its most important elements—those for which the open oral examination of the witness in presence of prisoner, judge and jury, is justly prized. It cannot give the look or manner of the witness; his hesitation, his doubts, his variations of language, his confidence or precipitancy, his calmness or consideration; it cannot give the manner of the prisoner, when that has been important, upon the statement of anything of particular moment; nor could the judge properly take on him to supply any of these defects, who, indeed, will not necessarily be the same on both trials; it is, in short, or it may be, the dead body of the evidence, without its spirit, which is supplied, when given openly and orally, by the ear and eye of those who receive it."

It is not questioned that it is the duty of a trial judge to be present during all the stages of a criminal trial. His absence during the examination of a witness, during the argument of counsel, or at the handing in of a verdict, has been held to constitute reversible error. See People v. Blackman, 127 Cal. 248, 59 Pac. 573; Thompson v. People, 144 Ill. 378, 32 N. E. 968; Ellerbe v. State, 75 Miss. 522, 22 South. 950, 41 L. R. A. 569. And where a statute required the presence of two or more judges at the trial it has been held, as we have seen, that the absence of one of them when the verdict was received invalidated the verdict. Hinman v. People, supra. In the case at bar a judge was present at all the stages of the trial of the defendant. But the judge who thus attended was not the same throughout the trial. Can one judge hear the witnesses for the state and another judge by consent hear the witnesses for the defense? And can a judge, who has not seen and heard all the witnesses seen and heard by the jury, charge the jury, and receive the verdict, and impose sentence if the accused has consented to his substitution in place of a judge who began the trial, but has been compelled by illness to retire?

In the case at bar the substituted judge came into the trial after the government had presented the whole of its case. There were 106 witnesses who testified for the government, and the substituted judge knew nothing of these witnesses, except as he read their testimony in the stenographer's minutes. A trial judge should have before him all the evidence that is before the jury, and he does not have it all before him if the jury has seen and heard the witnesses give their testimony upon the stand, while he has only read it as recorded in the minutes. Witnesses seen and heard by the jury must be seen and heard by the judge.

From the personal appearance of witnesses upon the stand the jury obtained, and the judge did not, what Professor Wigmore calls "the elusive and uncommunicable evidence of a witness' deportment while testifying." Wigmore's Evidence, § 1395. The demeanor of a witness on the stand may be as important as any other evidence in the case. The record of this case affords more than one instance where the judge frankly stated his embarrassment, due to the fact that he had not heard and seen all the witnesses, and so was unable to rule and to instruct the jury as he otherwise might have done. One of the several instances of this sort is seen in the following statement made in the course of his charge to the jury:

> "Now, I do not propose to comment upon the testimony of individual human beings in this case, and under the circumstances it would be a piece of judicial impertinence, because you have seen all the witnesses, and I have only seen some of them."

It is the opinion of this court that in a criminal case trial by jury means trial by a tribunal consisting of at least one judge and twelve jurors, all of whom must remain identical from the beginning to the end. It is not possible for either the government or the accused, or for both, to consent to a substitution either of one judge for another judge, or of one juror for another juror. The continuous presence

of the same judge and jury is equally essential throughout the whole of the trial.

The conclusion which we have reached makes unnecessary the consideration of other assignments of error.

Judge WARD, not otherwise dissenting, thinks the motion to dismiss the writ of error should be granted.

Judgment is reversed, and a new trial is ordered.

UNITED STATES v. DEBELL et al.

(Circuit Court of Appeals, Eighth Circuit. September 29, 1915.)

No. 4350.

(Syllabus by the Court.)

1. PUBLIC LANDS ⟹138— AVOIDANCE OF PATENT—TITLE OF PURCHASER

The title of a bona fide purchaser of land subsequent to the issue of the patent is superior to the equitable claim of the United States to avoid it for fraud or error in the issue of it.

[Ed. Note.—For other cases, see Public Lands, Cent. Dig. § 368; Dec. Dig. ⟹138.]

2. EQUITY ⟹138—COMPLAINT—PRAYER IN ALTERNATIVE FOR INCONSISTENT RELIEF.

It is not a valid objection to a complaint in equity, or to a grant of the relief warranted by the proof, that the plaintiff prayed, in the alternative, for inconsistent relief as for the avoidance for fraud or error of a patent to and a deed of his property, and if, on account of the bona fide purchase of it by another in reliance upon the patent and deed, that relief should be impossible, for the value or the proceeds of the property.

[Ed. Note.—For other cases, see Equity, Cent. Dig. §§ 319–321; Dec. Dig. ⟹138.]

3. INDIANS ⟹27—INDIAN LANDS—SUIT TO SET ASIDE PATENT AND DEED—PARTIES.

The United States may maintain a suit in equity to set aside for fraud or error of law a patent in fee simple under Act May 8, 1906, c. 2348, 34 Stat. 182, 183, and a deed by the Indian allottee, whereby the restriction upon the alienation of the land of the Indian under the care of the United States is violated or evaded, and the Indian is not a necessary party to such a suit.

[Ed. Note.—For other cases, see Indians, Cent. Dig. §§ 19, 20; Dec. Dig. ⟹27.]

4. INDIANS ⟹15—INDIAN LANDS—ALIENATION—COMPETENCY OF ALLOTTEE—"INCOMPETENT AND INCAPABLE."

An Indian 77 years of age, who has never had any property except that issued to him by the United States, who has never had any business or experience in selling land or disposing of the proceeds thereof, or in handling any other property except that issued to him by the government, who has no property except 320 acres of land held by the United States in trust for him, without power in him to convey it, who has drawn his monthly rations from the government for 20 years and is still doing so, who is an old-style Indian, who cannot read, or write, or speak the English language, cannot count money, and does not know how many cents there are in a dollar, is "incompetent and incapable" to manage his own affairs within the meaning of the first proviso of the amended section in Act May 8, 1906, c. 2348, 34 Stat. 182, 183, and especially is he

---

⟹For other cases see same topic & KEY-NUMBER in all Key-Numbered Digests & Indexes

incompetent to sell and convey his land and manage and dispose of the proceeds thereof.

It is indispensable to that competency and capability to manage his affairs which conditions the right of the secretary to issue a patent in fee simple to an Indian under this proviso that he shall at least have sufficient ability, knowledge, experience, and judgment to enable him to conduct the negotiations for the sale of his land, and to care for, manage, invest, or dispose of its proceeds with such a reasonable degree of prudence and wisdom as will be likely to prevent him from losing the benefit of his property or its proceeds.

[Ed. Note.—For other cases, see Indians, Cent. Dig. §§ 17, 29, 34, 37-44; Dec. Dig. ⚷15.

For other definitions, see Words and Phrases, First and Second Series, Incompetent.]

5. PUBLIC LANDS ⚷109—ISSUANCE OF PATENT—QUESTION OF FACT—EQUITABLE RELIEF.

Whether or not there is, at the close of a final trial or hearing before the Secretary of the Interior of a crucial question in reference to the issue of a patent to public lands, any substantial evidence to sustain a claim or a finding of fact determinative of the issue is in his, and in every judicial and quasi judicial, tribunal a question of law, and an injurious error of the Secretary in finally deciding that question presents good cause for relief in a court of equity.

[Ed. Note.—For other cases, see Public Lands, Cent. Dig. § 307; Dec. Dig. ⚷109.]

6. INDIANS ⚷15, 27—INDIAN LANDS—PATENT AND DEED—AVOIDANCE IN EQUITY—RELIEF.

One who, with knowledge of the incompetency of an Indian for whom the United States holds his land in trust, without the power in him to alienate it, induces him to sell the land to himself and apply for and obtain a patent in fee simple for it, and then to convey it to him, wrongfully appropriates the land to himself, becomes a trustee de son tort thereof and of its proceeds for the benefit of the Indian, and the United States may maintain a suit in equity to set aside, as against him, the patent and the deed, and in case the title has passed to an innocent subsequent purchaser, to recover of the appropriator the amount he realized from the land above the amount he paid for it to the Indian.

[Ed. Note.—For other cases, see Indians, Cent. Dig. §§ 17, 19, 20, 29, 34, 37-44; Dec. Dig. ⚷15, 27.]

Appeal from the District Court of the United States for the District of South Dakota; James D. Elliott, Judge.

Suit in equity by the United States of America against E. J. Debell and another. From a decree for defendants, plaintiff appeals. Reversed and remanded, with directions.

See, also, 227 Fed. 771, — C. C. A. —; 227 Fed. 775, — C. C. A. —.

E. W. Fiske, Asst. U. S. Atty., of Sioux Falls, S. D. (Robert P. Stewart, U. S. Atty., of Deadwood, S. D., and George Philip, Asst U. S. Atty., of Sioux Falls, S. D., on the brief), for the United States.

William G. Porter, of Aberdeen, S. D. (E. L. Grantham, of Aberdeen, S. D., and Maurice Rose, of Minneapolis, Minn., on the brief), for appellee Debell.

Charles P. Bates, of Sioux Falls, S. D. (William A. Schumacher and Rexford M. Sheild, both of Sioux Falls, S. D., on the brief), for appellee Butterfield.

Before SANBORN and CARLAND, Circuit Judges, and LEWIS, District Judge.

SANBORN, Circuit Judge. The United States appeals from a decree of dismissal of its suit in equity against E. J. Debell and W. H. Butterfield to avoid a patent dated February 24, 1908, to Pehinji, a Rosebud Sioux Indian of the full blood, for a tract of 320 acres of land which had been allotted to, and was on February 24, 1908, held by the United States in trust for, him without power in him to alienate it for 25 years after February 23, 1907, the date of the trust patent to him of his allotment of this land, and to avoid Pehinji's deed of the land to Debell on March 17, 1908, and Debell's deed of the same to Butterfield of July 27, 1908. The patent of February 24, 1908, was issued under this provision of Act of May 8, 1906, c. 2348, 34 Stat. 182, 183:

"Provided, that the Secretary of the Interior may, in his discretion, and he is hereby authorized, whenever he shall be satisfied that any Indian allottee is competent and capable of managing his or her affairs at any time to cause to be issued to such allottee a patent in fee simple, and thereafter all restrictions as to sale, incumbrance, or taxation of said land shall be removed and said land shall not be liable to the satisfaction of any debt contracted prior to the issuing of such patent."

The ground of the relief sought, which is set forth in the complaint, is that Pehinji was incompetent and incapable of managing his own affairs, that Debell, who was the licensed Indian trader at the agency for the Rosebud band of Indians, of which Pehinji was a member, W. C. Courtis, the manager of Debell's store at the agency, and Edward B. Kelley, the United States Indian agent and superintendent of the Rosebud Indian Reservation of the Rosebud band of Indians and of Pehinji, knew this fact, but in order to enable Debell to purchase Pehinji's land at less than its value, they colluded to cause Kelley to represent, and to induce the Secretary of the Interior to believe, that Pehinji was competent and capable of managing his own affairs, and to issue to him his patent in fee simple, that Debell then bought the land of Pehinji for $2,000, when it was worth much more, and obtained a deed from him therefor dated March 17, 1908, and that on July 27, 1908, Debell sold and conveyed this land to Butterfield, who knew all the facts alleged, for the sum of $3,200. In their answers Debell and Butterfield denied the incompetence of Pehinji, the collusion between Debell, Courtis, and Kelley; the misrepresentation to the Secretary regarding the competency of the Indian; that the land was worth more than $2,000 when Debell purchased it; and Butterfield alleged that he bought and paid $3,200 for it in reliance upon the patent in fee simple and the deed to Debell, without any notice of any of the alleged facts pleaded in the complaint in derogation of Debell's title. Upon the issues of the competency of Pehinji, the collusion of Debell, Courtis, and Kelley, the inducement and purpose of the representation of his competency to the Secretary by Kelley, the evidence was conflicting, but it was conclusive that Butterfield purchased the land of Debell and paid $3,200 for it in good faith in reliance upon the patent in fee simple to Pehinji, and upon the latter's

deed to Debell, and this fact is fatal to the claim to avoid that patent and deed as against Butterfield.

[1] The United States by its acts of Congress empowered the Secretary of the Interior to consider and determine whether or not Pehinji was competent and capable to manage his own affairs, and, empowered him, if he found that he was so competent, to issue to him a patent in fee simple, and the Congress enacted that if he did so, all restrictions upon the sale and conveyance by Pehinji of this land were thereupon removed. The Secretary so found, and issued the patent. This patent constituted in itself a conveyance of the complete title to the land and an adjudication that all restrictions upon the sale and conveyance thereof by the patentee were removed. In reliance upon that grant and adjudication Butterfield purchased and paid for the land, and the United States and all parties claiming through or under it are thereby estopped from assailing the patent or the title under it as against such an innocent purchaser. The title of a bona fide purchaser of land subsequent to the issue of the patent is superior to the equitable claim of the United States to avoid it for fraud or error of law in the issue of it. United States v. Detroit Timber & Lumber Co., 131 Fed. 668, 677, 67 C. C. A. 1, 10; United States v. Detroit Timber & Lumber Co., 200 U. S. 321, 26 Sup. Ct. 282, 50 L. Ed. 499; United States v. Winona & St. Peter R. Co., 15 C. C. A. 96, 109, 67 Fed. 948, 961; Colorado Coal & Iron Co. v. United States, 123 U. S. 307, 313, 8 Sup. Ct. 131, 31 L. Ed. 182; United States v. Burlington, etc., R. Co., 98 U. S. 334, 342, 25 L. Ed. 198; United States v. California & Oregon Land Co., 148 U. S. 31, 41, 13 Sup. Ct. 458, 37 L. Ed. 354; Wright-Blodgett Co. v. United States, 236 U. S. 397, 402, 403, 35 Sup. Ct. 339, 59 L. Ed. 637. As the United States was estopped from destroying or impairing the patent or the title under it as against Butterfield, the court was right in its dismissal of the suit against him.

[2] But the United States prayed in its complaint that if Butterfield should be found to have been a bona fide purchaser, so that the patent and the deeds could not be avoided as against him, it recover of Debell for the benefit of Pehinji the value of the land, alleged to be $4,000, or that Debell be decreed to hold the consideration received by him from Butterfield in trust for Pehinji, and to pay it to the plaintiff for Pehinji's benefit, and counsel insist that the court below erred because it failed to grant any of this relief. This claim is sturdily opposed by counsel for Debell on the grounds: (1) That the bill is multifarious because Butterfield was not a necessary party to the portion of the relief now sought, but he was a proper and a necessary party to the portion of the relief which has heretofore been considered, and that is sufficient to warrant his joinder; (2) that the claim for conversion and for money had and received are inconsistent, and that the claim for an avoidance of the patent and the deeds and for money had and received are likewise inconsistent, but it is not a fatal objection to the grant of such relief as the court deems just and equitable that the plaintiff in a suit in equity prays in the alternative for inconsistent relief; (3) that courts of equity have no jurisdiction of actions at law, and that actions for money had and received and for

conversion are actions at law, but a plaintiff may maintain a suit in equity against a defendant who without right has conveyed his property, or caused it to be conveyed, to himself, or to a third party, to compel him to reconvey it, or cause it to be reconveyed, and, if he has conveyed it away so that he cannot cause it to be conveyed back, to recover of him the amount he, as trustee de son tort, has received for it, or to recover the value of it, and if a cause of action in equity is established by the proof, and the court of equity is unable effectually to grant the relief first prayed, it may grant one of the other prayers for relief. Telegraph Co. v. Davenport, 97 U. S. 369, 371, 24 L. Ed. 1047; Geyser-Marion Gold Min. Co. v. Stark, 106 Fed. 558, 560, 45 C. C. A. 467, 53 L. R. A. 684.

While it is true that a complainant may not, in a suit in equity, join a cause of action in equity and a cause of action at law, and that where his cause of action in equity fails on the proof he cannot recover damages or moneys that he might have recovered at law, it is also true that where the proof sustains the cause of action in equity, but the defendant has by his course of conduct rendered the appropriate relief first sought ineffective, the chancellor may require him to make compensation for his prevention of that relief. Where the primary relief sought is the restoration of property and the defendant has placed it beyond his and the court's reach, the court may require him to pay the value of the property, or the proceeds he received from it, because the right to this relief inheres in and grows out of the equitable cause of action which the plaintiff has established. Moreover, the right to recover the proceeds springs from the immemorial jurisdiction of courts of equity to enforce trusts. One who by fraud or wrong acquires the property of another thereby becomes a trustee de son tort of that property, and holds it in trust for the owner. If he sells and conveys it the owner may successfully pursue him in equity as trustee for the property, or for the proceeds of it. If, therefore, the proof established the plaintiff's cause of action in equity against the defendant for the restoration of the land, he cannot escape accounting for the proceeds he obtained for the property, or the value thereof, on the ground that he placed the land itself beyond the reach of the court.

[3] Counsel for Debell also contends that the United States was not a proper party plaintiff, and that Pehinji was a necessary party. But this is a suit to set aside for fraud the removal of the restriction on alienation of the land of Pehinji imposed by the United States pursuant to its settled public policy to protect and preserve the property of the Indians, and this case cannot be successfully distinguished from Heckman v. United States, 224 U. S. 413, 432, 436, 437, 439, 445, 32 Sup. Ct. 424, 56 L. Ed. 820, Bowling v. United States, 233 U. S. 528, 534, 34 Sup. Ct. 659, 58 L. Ed. 1080, United States v. Gray, 201 Fed. 291, 293, 294, 119 C. C. A. 529, and United States v. Fitzgerald, 201 Fed. 295–297, 119 C. C. A. 533, where the rule is established that the United States has the capacity to maintain a suit in equity for proper relief in any case in which the restriction upon the alienation of land of an Indian allottee under its care has been transgressed, and that the allottee is not a necessary party to such a suit.

[4-6] Finally, counsel insist that, in view of the decision of the

court below in favor of his client and of the strong presumption of its correctness, the evidence in this case fails to establish the averments that the patent in fee simple was secured and the deed from Pehinji was obtained by the fraud and collusion of Debell, Courtis, and Kelley. The evidence establishes these facts: In 1908 Kelley was the Indian Agent and Superintendent, and Pehinji was an Indian of full blood under his care and supervision. Kelley had been such an agent since 1905, and knew Pehinji, his character, his capacity, his competency, and his situation. Pehinji was 77 years old. The only property he had was the 320 acres in controversy. He could not read, or write, or speak, the English language, his testimony was taken through an interpreter, and the evidence shows that his conversations with various parties which are detailed in the testimony were conducted through an interpreter. He lived with his son about 11 miles from the agency, and drew monthly rations from the government for his support, and had done so for 20 years. Debell had been the licensed Indian trader at the agency for many years. He was well acquainted with Pehinji, knew his character, capacity, and situation. Pehinji testified that Kelley came out where he was living and told him that he had to sell his land; that he could get all the money that was coming to him and put it out at interest; that he could eat off of half of it and let the other half out at interest, and that the part laid out at interest would go on to his children and grandchildren; that some time after this conversation Tod Smith, an employé of Debell, came out where he was living with a wagon, told him that Debell had sent for him—

"that he [Debell] had worked to get this up for you through the lawyer, and if you do not do this, get this up he would—you would have some mishap or something happen to you, or some mishap or something terrible come to you—that something would happen to me, or mishap, or get myself into trouble because he had a hard time to get that thing through, through the lawyer."

Tod Smith brought Pehinji to Debell's store at the agency in the wagon. Pehinji testified that Debell talked to him through an interpreter, and said to him:

"I will help you out and you will eat off the $2,000 and you will get the rest when the patent comes, but I do not know how much that will be."

He testified that Debell then wanted him to touch the pen, but he told him:

"No, I don't want to touch the pen here, and the only place we touch the pen is over to the agent's office; that we had better go over to the office and I will touch the pen there. Capt. Allison spoke up and says that would not make any difference if you touch the pen a hundred times. Then I says: 'You are after this piece of land yourself, and I do not want to do anything on the sly. We had better go over to the office, and I will touch the pen there.' Then I knew he was going to possess the land, so I touched the pen there in the store. * * * They sent an order over there on the other store, and the other storekeeper brought the patent down there, and they gave him about $22 for bringing it down. Then of course it was in his possession, and that is how I touched the pen."

He testified that he never went to school; that no one ever taught him to count money; that he did not know the names of the months; that he did not know how many acres there are in a quarter section,

nor how many cents there are in a dollar; and that all he received for the land was $2,000, and he did not get the rest; that he knew when he touched the pen the land was gone, and he could not get it back. On cross-examination by counsel for Debell he testified that he received the $2,000 in smaller amounts in cash, through orders on Debell to pay to others, in a saddle, in two horses, and in a sheep-lined coat; that he knew when he touched the pen that was the sale of the land to Debell, and he was to get $2,000, but he understood he was to get more; that he knew Debell was going to take it, although he did not give it to him; that Debell was determined to take possession of the land, while he did not really want to let it go; that he did not sell it; that he knew Debell was to take it, and that is the reason he did not say anything; that he received $2,000, but expected more; that Debell told him that when the deed should come he was going to get a pile of money; that Debell said he was going to get a big pile, his arms full. Kelley testified that he never went to Pehinji, never had any such conversation as Pehinji related, never colluded with Debell or Courtis to get the patent in fee simple, or to defraud Pehinji of his land; that Pehinji's ability to look after his own affairs would be rated fair at that time; that he would know he was selling the land and making application for the patent. On cross-examination he testified that he knew nothing about the sale to Pehinji until recently; that he knew Debell from 1905 to 1909, that he once recommended him for Indian trader, and stated he was dealing fairly with the Indians, and that he still thinks so. Debell testified that Pehinji came to him to sell the land; that he never urged or solicited him to do so; that he did not remember very much of the conversation; that he offered him $2,000 for it, and Pehinji took it and was satisfied; that the same day he signed the deed he was paid the money; that he could not remember how much money Pehinji received at the time the deed was made, but Pehinji always knew he could get it; that he bought the land when Pehinji signed the deed; that he might have been in and talked it over with him a few days before.

The date of the deed and the date of its acknowledgment is March 17, 1908. On the account book of Debell Pehinji is credited with land $2,000 under date of January 8, 1908, and under the same date he is charged with cash order to Mrs. Flood $50, and one cowboy saddle $50, and the sum of the items charged against him upon this account, from day to day between January 7, 1908, and March 17, 1908, is $476.50. Debell testified that he made the entries in this account himself; that they are on the book of original entry; that he kept books of account; that sometimes he made entries when the transaction occurred, and sometimes he did not, but that he set it down at the time in Pehinji's case. When his attention was subsequently called to the date January 8, 1908, of the credit of the $2,000 for the land and of the charge of $50 for Mrs. Flood, and to the date March 17, 1908, of the deed and of its acknowledgment, he testified that he was not sure about the books speaking the truth as to the dates; that he knew there wasn't any money paid until he got the deeds; and that he could not give any explanation of the appearance of these items

dated back to January 8, 1908. He testified that he never had any talk with Kelley before he obtained Pehinji's deed about buying the land, or about Pehinji's application for his patent in fee simple, and that Pehinji was competent and capable to manage his affairs. On redirect examination by his counsel he testified that he thought the entry of the credit of $2,000 under date of January 8, 1908, was put in there at the time the deed was executed on March 17, 1908.

Mrs. Flood testified that she received $50 at the store of Debell before the patent was delivered; that she did not get any money before the deed was delivered; that she thought she received the money in January, but that she could not remember in what month the deed or the patent was delivered; that the patent from the government to Pehinji was taken to Debell's office after the deed was made; that she was at Debell's store once with Pehinji; that she signed the deed as a witness; that that was the time that Tod Smith went after the old man to his place and brought him back there and asked her over to Debell's; that Debell wanted to know why he did not take his patent to Debell's. That Pehinji thought he could sell it and do better, because he was not getting enough; that Debell told him he had bought the land already, and he could not take it to any one else.

Courtis, the notary who took the acknowledgment of Pehinji's deed, testified that the date of the deed and that of the acknowledgment were put in on March 17, 1908, when it was executed; that he was employed by Debell; that he sent Tod Smith for Pehinji; that Mrs. Flood and Tod Smith were present; that the deed was executed before the patent was delivered; that Pehinji and Debell had a talk about the sale of the land which he heard prior to March 17, 1908; that he heard Debell offer Pehinji $2,000 for the land at that previous talk; that he was not sure whether or not Mrs. Flood was present at that time; and that he thought Pehinji was capable of managing his affairs.

William F. Schmidt, issue clerk under Kelley, testified that he knew Pehinji, that he was incompetent to attend to his affairs, and that it was part of his duty as issue clerk "to list all the noncompetent Indian lands for sale."

Charles L. Davis, special Indian agent inspecting, testified that he became acquainted with Pehinji in April, 1909, while engaged in investigating sales of Indian lands; that he took two statements from him; saw him in Aberdeen in 1909, and heard him testify in this case; and that he deemed him incompetent. Maj. J. B. Woods is the successor of Kelley as Indian agent. He testified that he first saw Pehinji in 1909; that he had known him about a year at the time he was testifying; that he had talked with him at different times; that his conversations were through an interpreter; that he is one of the old-style Indians, entirely uneducated; that he cannot speak, read, or write, the English language; and that he does not believe he was competent or capable of managing his own affairs in 1908. Many witnesses testified relative to the value of the land in March, 1908, and their estimates varied from $2,000 to $4,000, but the weight of the evidence was that the land was worth about $2,000.

It will be remembered that Kelley's account book shows a credit to Pehinji of $2,000 on account of land on January 8, 1908, and the charge to him of $50 for Mrs. Flood on that day; that she testified she thinks she received this $50 in January, 1908; that Debell testified that he made the entries of the transactions in Pehinji's account at the times they occurred, although he subsequently testified otherwise in an attempt to square his testimony with the theory that Pehinji's deed was executed in March, 1908; and that he paid Pehinji nothing until after the execution of the deed. Now on the next day after the date of the entries of January 8, 1908, on January 9, 1908, Pehinji's application for his patent in fee simple, addressed to the Commissioner of Indian Affairs, is dated at the Rosebud Agency and signed by Pehinji's mark, and under the same date Kelley wrote this letter addressed to the Commissioner:

"Sir: Inclosed herewith is the trust patent to the allotment of Pehinji or Yellow Hair, together with his application for a patent in fee simple in lieu thereof. Yellow Hair is an honest, deserving and good old Indian of full blood. He is and has been for years a faithful friend of the government and I consider him worthy to be intrusted with a patent in fee simple, and I therefore recommend that his request be granted."

On this letter the Secretary of the Interior caused the patent in fee simple, dated February 24, 1908, to be issued to Pehinji and that patent was first delivered to him, as his receipt to Kelley proves, on April 28, 1908, more than a month after his deed is dated. There is other evidence in the record in this case, but it is not of sufficient materiality to modify the result which that which has been recited must induce.

The strong presumption in favor of the finding of the court below has received consideration and due weight in this case.. In view of that presumption and finding, the evidence in this record has been read and re-read. It has received deliberation and meditation. The result is that it has led the court to these conclusions: In January, 1908, the United States had decided in February, 1907, that Pehinji was incompetent and incapable to manage his own affairs and especially to manage the sale and the care and disposition of the proceeds of the sale of his land, and that he would be thus incompetent for 25 years from that date, and it had issued its trust patent and agreement dated on that day to hold his land for him and his heirs during that time. The legal presumption was that that decision was just and right and that he was less competent in 1908 than he was in 1907, for he was 76 years of age when his trust patent was issued. An Indian 77 years of age, who has never had any property except that issued to him by the United States, who has been under the charge and care of an Indian agent, who has never had any business or experience in selling land, or caring for or disposing of the proceeds thereof, or in handling any other property except the small amounts issued to him by the government to sustain life, who has no property except 320 acres of land held by the United States in trust for him, without power in him to alienate it, who has drawn his monthly rations from the government for 20 years and is still

doing so, who cannot read, or write, or speak, the English language, cannot count money, and does not know how many cents there are in a dollar, is incompetent and incapable of managing his own affairs within the meaning of the first proviso of the amended section in Act May 8, 1906, chapter 2348, 34 Stat. 182, 183, and especially is he incompetent to sell and convey his land and to care for, manage, and dispose of the proceeds thereof. In the year 1908, Pehinji was such an Indian, and Debell and Kelley knew it, and knew that he held his land without the power of alienation. On January 8, 1908, Debell had conceived the scheme to buy Pehinji's land for $2,000 by inducing him to apply for and induce the Secretary of the Interior to issue to him a patent in fee simple for it on the ground that he was competent, and to induce Pehinji to convey the land to him when he knew that the issue of the patent and the conveyance of the land to him would be a defiance of the settled policy of the United States to preserve the land of such Indians for their benefit, and a wrongful evasion of the restriction on alienation to which Pehinji and the land were subject. He carried this scheme out. On or about January 8, 1908, he induced Pehinji to make a void agreement with or a deed to him to convey the land to him for $2,000. He induced Pehinji to apply for his patent in fee simple on the next day thereafter in order to carry out this scheme. On the same day Kelley, the Indian agent, sent Pehinji's application to the Commissioner of Indian Affairs, with his statement that Pehinji was "worthy to be intrusted with a patent in fee simple, and I therefore recommend that his request be granted," and induced by that statement, and without other evidence of the competency or capacity of Pehinji, the Secretary caused the patent to be issued.

Counsel for Debell argue that Kelley did not represent to the Secretary by his letter that Pehinji was competent or capable to manage his own affairs. He stated that Pehinji "was worthy to be intrusted with a patent in fee simple," and he stated this in order to induce the Secretary to issue one, when the only condition on which he could lawfully issue one was that Pehinji was competent and capable of managing his own affairs, and the Secretary was the quasi judicial tribunal in which the power was vested and upon which the duty was imposed to hear and consider the evidence and adjudge the issue whether or not this condition existed. The Secretary decided on this representation—and that fact raises a perfect cause of action in equity —to set aside the patent as against Debell, who knew the incompetency of Pehinji, whether Kelley's letter was or was not a representation of his competency. If it was the former it was a fraudulent representation, for Kelley could not have failed to know that Pehinji was incompetent, and the United States had the right to the avoidance of the patent by the proper court of equity as against Debell. If it was the latter, then there was no substantial evidence of Pehinji's competency before the Secretary, and his adjudication without substantial evidence to sustain it was an error of law which likewise vested in Pehinji and in the United States a cause of action in equity to avoid the patent in fee simple upon that adjudication. Whether or not there

is, at the close of a final trial or hearing of a crucial question in reference to the issue of a patent to public lands before the Secretary, any substantial evidence to sustain a claim or a finding of fact in support of such a claim is in his, and in every judicial and quasi judicial, tribunal a question of law, and an injurious error of law of the Secretary when finally deciding such a question presents good ground for relief in equity. Howe v. Parker, 190 Fed. 738, 746, 111 C. C. A. 466, and cases there cited. There can be, however, no real doubt that Kelley meant by his letter that Pehinji was competent and capable to manage his own affairs, and especially to manage the sale of his land and the disposition of its proceeds, and that the Secretary so understood his meaning.

Counsel for Debell contends that the Commissioner of Indian Affairs declared that the test to determine whether or not an Indian was competent and capable to manage his affairs, and especially to sell and convey his land and care for and manage the proceeds thereof under the act of Congress to which reference has been made, was not whether he was competent to manage them with some reasonable degree of prudence and care, but whether or not he would know what he was doing when he should make a deed, and whether or not he would be aware that when he once parted with his property by executing his deed he could not recover it again, and counsel argues that by that test Pehinji was competent. If the Secretary of the Interior determined the competency of this Indian by any such test, he committed another error of law, for a person might know he was making a deed to his property, and that after he made and delivered the deed he could not regain his property, and yet be utterly incapable of managing his affairs, the sale of his property, or the care or disposition of the proceeds. It is indispensable to that competency and capability to manage his affairs which conditions the right of the Secretary to issue a patent in fee simple to an Indian under the first proviso of section 6 in chapter 2348, 34 Stat. 182, 183, that he shall have at least sufficient ability, knowledge, experience, and judgment to enable him to conduct the negotiations for the sale of his land and to care for, manage, invest, and dispose of its proceeds with such a reasonable degree of prudence and wisdom as will be likely to prevent him from losing the benefit of his property or its proceeds.

Either before or after the issue of the patent in fee simple Debell induced Pehinji to convey the land to him, and between January 7, 1908, and July, 1908, paid him, in various amounts of money, goods and moneys paid out on his order, sums which aggregated $2,000. On July 27, 1908, he conveyed this land to Butterfield, and received $3,200 therefor. Knowing, as he could not have failed to know, that Pehinji was incompetent and incapable of managing his own affairs, and especially of selling his land and managing the proceeds thereof with any reasonable degree of wisdom or prudence, and that the patent in fee simple and the deed to him were evasive violations of the settled policy of the nation to preserve and protect incompetent Indians from the conveyance or loss of their property, of the acts of Congress which evidence this policy, and of the express restriction on

the alienation of this land, Debell, by the procurement of this deed, made a wrongful appropriation of Pehinji's land to himself, which constituted him a trustee de son tort of that land for Pehinji, and vested in Pehinji and in the United States a cause of action in equity to avoid the deed as to Debell, or to recover from him the proceeds he received from this trust property. As the avoidance of the deed and the patent would be ineffectual, the United States was entitled to the recovery of the proceeds. Debell received $3,200 on July 27, 1908, for Pehinji's land, but he had paid to the latter, on account of his deed, $2,000, which Pehinji used as he saw fit. He who seeks equity must do equity. The conveyance to Debell was voidable, but it was not void because the United States had issued to Pehinji its patent in fee simple. A just and careful administration of the law with reference to the issue of this patent by the United States and its refusal to issue the patent in fee simple undoubtedly would have prevented the consummation of the scheme of Debell and the making of the deed of Pehinji, and, in view of all the facts and circumstances of this case, the equitable and just measure of the recovery from Debell is deemed to be the amount he realized from the transaction, less the amount he paid to Pehinji, which is $1,200, and interest thereon from July 27, 1908.

The decree of dismissal of this suit must therefore be reversed, and the case must be remanded to the court below, with instructions to render a decree to the effect that, as against Debell, the patent in fee simple and the deed of Pehinji be set aside, and that the defendant Debell pay to the United States, within 60 days after the entry of the decree, $1,200 and interest thereon from July 27, 1908, and the costs and disbursements of the suit, and that if he fail to pay these amounts within that time, the United States have judgment and execution to enforce their collection, but that, as against Butterfield and all parties claiming by, through, or under him, the patent in fee simple and the deed of Pehinji are valid and conclusive, that the notice of lis pendens in this suit be canceled, and that the complainant is entitled to no relief as against Butterfield. The decree may also contain such other provisions not inconsistent with the views expressed in this opinion as the court below may deem fit; and it is so ordered.

UNITED STATES v. DEBELL et al.

(Circuit Court of Appeals, Eighth Circuit. September 29, 1915.)

No. 4352.

INDIANS ⟹15—LANDS—FRAUDULENT ACQUISITION FROM ALLOTTEE.

Where, through misleading representations made by an Indian agent acting in the interest of a would-be purchaser, the Secretary of the Interior was led to believe that an Indian allottee was competent and capable of managing her own affairs, and caused to be issued to her a patent in fee simple, as authorized by Act May 8, 1906, c. 2348, 34 Stat. 182, whereas she was in fact wholly incompetent, and sold the land for much less than its

value to such purchaser, who sold and conveyed it to an innocent purchaser, the United States is entitled to a decree against the first purchaser for the difference between the amount he paid and the fair value of the land for the benefit of the allottee.

[Ed. Note.—For other cases, see Indians, Cent. Dig. §§ 17, 29, 34, 37–44; Dec. Dig. ⚷15.]

Appeal from the District Court of the United States for the District of South Dakota; Jas. D. Elliott, Judge.

Suit in equity by the United States against E. J. Debell, William H. Lynn, and Royal Mutual Life Insurance Company. Decree for defendants, and complainant appeals. Reversed.

See, also, 227 Fed. 775, — C. C. A. —.

E. W. Fiske, Asst. U. S. Atty., of Sioux Falls, S. D. (Robert P. Stewart, U. S. Atty., of Deadwood, S. D., and George Philip, Asst. U. S. Atty., of Sioux Falls, S. D., on the brief), for the United States.

William G. Porter, of Aberdeen, S. D. (E. L. Grantham, of Aberdeen, S. D., and Maurice Rose, of Minneapolis, Minn., on the brief), for appellees Debell and Royal Mut. Ins. Co.

Charles P. Bates, of Sioux Falls, S. D. (William A. Schumacher and Rexford M. Sheild, both of Sioux Falls, S. D., on the brief), for appellee Lynn.

Before SANBORN and CARLAND, Circuit Judges, and LEWIS, District Judge.

SANBORN, Circuit Judge. This is another case wherein, as in United States v. Debell and Butterfield, 227 Fed. 760, — C. C. A. —, a patent in fee simple and a deed to Debell were procured for land theretofore held in trust for Big Old Woman, a Rosebud Sioux Indian of the full blood. The United States brought suit to set aside the patent, the deed to Debell, and subsequent deeds through which the land was conveyed to William H. Lynn, a bona fide purchaser for value who on June 18, 1909, mortgaged it for $2,500 to the Royal Mutual Life Insurance Company, a bona fide mortgagee.

There were two acts of Congress under which the land of an Indian allottee which was held in trust for him or her by the United States with no power of alienation in him or her might be sold and conveyed, Act of May 8, 1906, 34 Stat. c. 2348, pp. 182, 183, which provided that whenever the Secretary of the Interior should be satisfied that any Indian allottee was competent and capable of managing his or her affairs he might cause a patent in fee simple to be issued to him or her, and thereafter all restrictions on his or her alienation of the land should be removed, and Act of March 1, 1907, 34 Stat. c. 2285, p. 1018, which provided that any noncompetent Indian to whom a patent containing a restriction on alienation had been issued for an allotment of land might sell or convey all or any part of such allotment on such terms and subject to such conditions as the Secretary of the Interior should prescribe, and that the proceeds derived therefrom should be used for the benefit of the allottee under the supervision of the Commissioner of Indian Affairs. The responsibility for the care, management, and disposition of the proceeds

of the sale under the former act was in the Indian allottee free from all restraints. The responsibility for the care, management, and disposition of the proceeds of the sale under the latter act was in the Commissioner of Indian Affairs, and it was his duty to see that they were applied to the use and benefit of the allottee in such a way as in his judgment would most conduce to his or her support and comfort.

Big Old Woman had all the characteristics of the native Indians. She could not read or write the English language. She had never conducted any business or done anything of that nature, except that she tanned and painted buffalo hides many years before the transactions here in question. She had never lived among the white people. She drew her monthly rations from the government, and had done so for 20 years. She had a son who had been an Indian policeman, and she had a daughter, and she lived a part of the time with one and a part of the time with the other. She knew nothing about the value of land or of money, was 83 years old, blind, continually sick, and in her dotage. It was the duty of the Indian agent Kelley to make and keep rolls or lists of the noncompetent land of the Indians. This duty had been imposed by him upon Mr. Schmidt, the issue clerk at the agency, and Schmidt had enrolled or listed the land of Big Old Woman as noncompetent land. On May 15, 1908, she presented an application to sell 160 acres of this land as a noncompetent Indian under the Act of March 1, 1907. In that application she averred that she was unable, by reason of old age and infirmity, being 80 years old, to improve or cultivate the land or use it advantageously for the support of herself, for which it was needed, and she agreed that the proceeds of the land should be placed to her credit in some bank, subject to her check for amounts not exceeding $10 per month when approved by the agent or other officer in charge, and for sums exceeding $10 per month upon the approval of the Commissioner of Indian Affairs. Schmidt posted the requisite notice of this application, and he never knew that there was any application for or recommendation of a patent in fee simple of this land until the patent was received from Washington in September, 1908. Meanwhile, on June 1, 1908, Kelley, the Indian agent, wrote the Commissioner that he sent him the trust patent and an application of Big Old Woman for a patent in fee, and that he recommended that she be granted such a patent. He failed to state in his letter that she was competent to manage her own affairs, or any facts indicating such competency, and the Commissioner on June 11, 1908, wrote a letter to him, in which he called his attention to this fact and requested him "to make an additional report relating to her competency." This was Kelley's answer:

"Sir: I have the honor to acknowledge receipt of office letter 'Land' 37571–1908, E. S. S., Subject:—Asks information as to competency of an Indian.

"Big Old Woman or Two Eagle is a very respectable old woman, living with her son and his family, formerly a policeman on this reservation. They are well to do people, able to manage their own affairs and take care of themselves. Big Old Woman is getting infirm, and as she is asking for a patent in fee for only part of her allotment, I respectfully recommend that her request be granted, as I am satisfied she will never be without a means of support."

The conclusion of the court from the evidence is that Big Old Woman was incompetent and incapable to manage her own affairs, and especially to sell her land and to manage, invest, and dispose of its proceeds with any reasonable degree of prudence, care, or judgment, and these evasive letters of the Indian Agent leave little doubt that he knew that fact, but, evading a direct answer to the question about her competency, was recommending and endeavoring to procure a patent in fee simple in violation of the policy, the legislation, and the express restriction on alienation of this land which it was his duty to enforce. He succeeded. A patent in fee simple for the land in controversy was issued dated September 8, 1908. About September 22, 1908, Debell went to Big Old Woman, about 16 miles from the agency, gave her $50, promised to pay her $1,500 for the land, and caused her to touch the pen to her mark on a deed from her to him of the 160 acres in controversy for the consideration of $1,500, according to the recital in the deed. This $1,500 was nearly all paid out by him, according to his account book, between September 14, 1908, and April 16, 1909. About the latter date an investigation of this transaction was commenced, and thereafter Debell paid the son of Big Old Woman $1,000 more, making $2,500 in all for the land. The defense upon which counsel seem to rely much is that Big Old Woman verbally gave this land and its proceeds to her son and daughter, and authorized the son to sell it for her, that he conducted the negotiations with Debell for the sale, and that he was present consenting when Debell caused Big Old Woman to touch the pen upon her mark on the deed. But the prohibition of the alienation of her land by this incompetent Indian woman as imperatively forbade its alienation to or for the benefit of her son as it did to or for the benefit of any other person. Nor did the son's consent to or participation in the transaction in the least relieve it of the vice of an evasion or violation of the policy and the legislation against alienation and the express restriction thereof. It was not the consent of the son of Big Old Woman, but the consent and authority of the United States, honestly secured upon a presentation of the actual facts of the case, that was indispensable to the validity of the patent in fee and the subsequent deed to Debell. It is useless to recite more of the evidence or to discuss it. It is sufficient to say that it has convinced the court that the patent in fee simple was obtained by representations which, though not literally false, were intended to, and did, mislead and deceive the Secretary into issuing a patent in fee simple to an incompetent Indian woman, in the belief that she was competent, that Kelley and Debell knew that this woman was incompetent, and that the patent to her was an evasion or violation of the restriction on the alienation of her land, and that the United States is entitled to the same measure of relief granted in the case of United States v. Debell and Butterfield, to the opinion in which reference is here made for the rules and principles of equity and their application to the facts which have led the court to this result. Debell sold the land on February 2, 1909, for $4,000, he paid $2,500 for it, and the United States may recover the difference, $1,500 with interest. Let the

decree below be reversed, and let a decree be rendered in favor of the United States in the form prescribed in the case of Debell and Butterfield.

UNITED STATES v. DEBELL et al.

(Circuit Court of Appeals, Eighth Circuit. September 29, 1915.)

No. 4351.

1. INDIANS ⟹15—LANDS—FRAUDULENT PROCUREMENT FROM ALLOTTEE.
   Evidence considered, and *held* to show that a fee-simple patent for an incompetent Indian woman allottee was fraudulently procured by the Indian agent and another, for the purpose of obtaining her land, but that the deed from her was executed before the issuance of the patent, while she still held under the trust deed with restrictions against alienation, and was therefore void.
   [Ed. Note.—For other cases, see Indians, Cent. Dig. §§ 17, 29, 34, 37–44; Dec. Dig. ⟹15.]

2. INDIANS ⟹15—SUIT TO CANCEL CONVEYANCE BY ALLOTTEE—CONDITIONS TO GRANT OF RELIEF.
   Although the land was still owned by the fraudulent purchaser, the action of the Department in granting the application for the fee-simple deed without due investigation at least contributed to the illegal transaction, and before the United States is entitled to a cancellation of the patent and deed, it should be required to refund the money paid for the land by such purchaser.
   [Ed. Note.—For other cases, see Indians, Cent. Dig. §§ 17, 29, 34, 37–44; Dec. Dig. ⟹15.]

3. UNITED STATES ⟹144—SUITS IN EQUITY BY—CONDITIONS TO GRANT OF RELIEF.
   A court of equity may condition its grant of relief to the United States by such requirements as may be just and equitable, although those requirements may not be enforceable in any other way.
   [Ed. Note.—For other cases, see United States, Cent. Dig. § 142; Dec. Dig. ⟹144.]

Appeal from the District Court of the United States for the District of South Dakota; Jas. D. Elliott, Judge.

Suit in equity by the United States against E. J. Debell and W. C. Courtis. Decree for defendants, and complainant appeals. Reversed.

See, also, 227 Fed. 771, — C. C. A. —.

E. W. Fiske, Asst. U. S. Atty., of Sioux Falls, S. D. (Robert P. Stewart, U. S. Atty., of Deadwood, S. D., and George Philip, Asst. U. S. Atty., of Sioux Falls, S. D., on the brief), for the United States.

William G. Porter, of Aberdeen, S. D. (E. L. Grantham, of Aberdeen, S. D., and Maurice Rose, of Minneapolis, Minn., on the brief), for appellees.

Before SANBORN and CARLAND, Circuit Judges, and LEWIS, District Judge.

SANBORN, Circuit Judge. This is a suit of the same character as that in United States v. Debell and Butterfield, 227 Fed. 760, — C. C. A. —, in which the opinion is filed herewith. The act of Con-

---

⟹For other cases see same topic & KEY-NUMBER in all Key-Numbered Digests & Indexes

gress and the principles and rules of equity which condition the disposition of this suit are the same as those that were decisive of that case, and reference is made to the opinion therein for them, and for the views of the court relative to their application to cases of this character. This case differs from that in the fact that there is here no bona fide purchaser from Debell, and he still holds the land, a half section, which Clown Woman, a Rosebud Sioux Indian of the full blood, owned in 1907 and 1908 without the power of alienation, and which the United States was then holding in trust for her for 25 years from July 1, 1901, pursuant to the provisions of a trust patent which had been issued to her on that day.

[1] An extended recital of the evidence in this case will be omitted because the review of the evidence in the opinion in the suit against Debell and Butterfield sufficiently discloses the views of the court relative to the burden, character, and sufficiency of proof in such cases. In this case the evidence upon the question of the competency and capability of Clown Woman to manage her own affairs, and especially to sell her land and care for and manage the proceeds thereof, on the question of the time when her deed was signed and delivered by her, on the question of the knowledge of Debell and Courtis of her incompetence and of their intent to procure the patent in fee simple and to obtain her deed in violation or evasion of the policy and legislation restricting the power of incompetent Indians to sell and convey their lands, and on the question of the value of the land when they obtained her deed was conflicting. It may be said in passing, however, that the issue relative to the value of the land is not determinative in this case. If it were so, the evidence upon that issue is insufficient to prove that the land was of greater value than the $2,000 which Debell paid to Clown Woman for it. The chief purpose and main object of the restriction upon alienation is not to prevent the incompetent Indian from selling his land for a price too low, but to prevent him from selling it at all, to the end that he shall be prevented from losing, giving away, or squandering its proceeds and thus be left dependent upon the government or upon charity for his support. The evidence in this case clearly proves that Clown Woman gave away or in other ways so disposed of the moneys she received for her land that she lost the benefit of the greater portion of its value, and is left penniless.

We return to the evidence. It established these facts conclusively: Clown Woman was about 67 years old in 1907. She held her land under a trust patent dated July 1, 1901, with no power to alienate it until July 1, 1926. She was a widow. Her husband had died about 15 years prior to 1907. She had the usual characteristics of the native Indian woman. She had never attended a school, she could not read or write the English language, she could speak or understand but few English words, and her conversations with Debell were conducted through an interpreter. She could count silver money, but could not count paper money. She did not know the names of the months. She drew her rations from the government monthly, and had done so for many years. Her application for a patent in fee simple was dated June 1, 1907. It was written by Debell, and was accompanied with a

certificate that she had made no contract to sell her land in case a patent in fee simple was granted to her, which was verified before Courtis on June 1, 1907. They were signed, "Heokawin or Clown Woman $\overset{\text{her}}{\underset{\text{mark}}{X}}$," and all of this signature but the mark was written by Debell. Kelley, the Indian agent, sent these papers to the Commissioner of Indian Affairs and a patent in fee simple to Clown Woman was issued March 23, 1908, but it was not delivered to her until May 9, 1908.

Upon the account book of Debell there are entries made by him personally under the dates February 17 and February 18, 1908, of a credit to Clown Woman "By land deposit 2,000" and of debits of several items aggregating $723.40, one of which is "Cash 400." Clown Woman deeded her land to Courtis, but Courtis subsequently deeded it to Debell, who they testified paid to Courtis whatever he had paid for it. They testified that Courtis gave Debell $400 in paper money, and Debell paid Clown Woman $400 in silver money when she signed the deed, and that later Debell paid back to Courtis what he had advanced, and completed the payment of the $2,000 to Clown Woman. The fact is conclusively established that whenever Clown Woman signed the deed to Courtis, Debell gave her a big bag of silver money, which amounted to $400. The deed and its acknowledgment, which is signed by Debell, bear the date March 31, 1908, and Courtis conveyed the land to Debell by a deed dated January 5, 1909. The issue whether the deed was signed and delivered to Clown Woman on February 17 or 18, 1908, when Debell's entries on his account book charge the payment of the $400 to Clown Woman and credit the $2,000 to her for the land deposit, or when the deed and acknowledgment bear date, is of some importance because, if at the former date, the restriction on alienation was then actually and apparently complete, the deed was void, and it passed no title to Courtis or Debell. Monson v. Simonson, 231 U. S. 341, 34 Sup. Ct. 71, 58 L. Ed. 210; Moffat v. United States, 112 U. S. 24, 5 Sup. Ct. 10, 28 L. Ed. 623; Iowa Land & Trust Co. v. United States, 217 Fed. 11, 13, 133 C. C. A. 121. Debell testified that the entries in his account book under the dates February 17th and 18th were made about the time the deed was signed, but that the dates were wrong; that the deed was signed the day it bore date, but he could not account for the dates of the entries on the book. Debell and Courtis testified that the deed was signed after the patent was issued, but before it was received by Clown Woman. Courtis testified that he negotiated the purchase from Clown Woman. The witnesses to the deed, Louise Flood and Charley No Heart, testified that the talk which resulted in the sale and the signing of the deed by Clown Woman was conducted by Debell and Clown Woman, and that the only persons present were Debell, Clown Woman, No Heart, and Louise Flood, who acted as interpreter. Acts often speak louder and more truthfully than words. Personal interest, time, the intervening consideration of other matters dim and sometimes modify the memory, but the written record of the transaction made at the time when no motive to cause it to speak otherwise than the truth existed, is generally correct and, once made, never changes itself. It requires

a great stretch of faith to believe that Courtis purchased this land of Clown Woman, gave Debell $400 or $600 in paper money, and in consideration thereof Debell paid her on behalf of Courtis $400 or $600 in silver money for the land, and then portrayed that transaction by entries made by himself personally in his books of account by a credit to Clown Woman of $2,000 land deposit and a charge of $400 or $600 cash against her and in his favor. Why did he not make no entry at all if he had no interest in the purchase, or if he made any entries why did he not charge Courtis with the $400 or $600 in silver paid to Clown Woman and credit Courtis with the $400 or $600 in paper money which he had received from him? It requires still greater credulity to believe that the deed was not signed and delivered until March 31, 1908. All the witnesses agree that it was signed and delivered at the time the $400 was paid to Clown Woman. In view of the fact that Debell credited Clown Woman on his account book with the $2,000 land deposit and charged her with the $400 and with other items in February, 1915, and of all the evidence in the case relative to this subject, the court has reached the conclusion that Clown Woman signed her deed and delivered it to Debell in February, 1908, and that the date of the deed and the date of the acknowledgment were subsequently inserted therein.

The application for the patent in fee simple which Debell wrote and Clown Woman signed by her mark stated that she had 18 head of horses and 60 head of stock cattle, and that her former husband had taught her the ways of the white people. Kelley, sending the application to the Commissioner, wrote: "The statements set forth in her application are true in every respect, and I respectfully recommend that she be granted a patent in fee simple." She had no horses and just three cattle. She lived with her son, was drawing monthly rations from the government, and, as her son testified, eating off them. She had done no business or work for 15 years except to make a few moccasins and sell them for a little spending money. It cannot be that Debell or Courtis or Kelley did not know that the statements in the application were untrue, and that Clown Woman was incompetent and incapable of managing her own affairs, and especially of selling her land and managing its proceeds with any substantial degree of prudence or wisdom. Confidence in these conclusions is much confirmed by the facts that it was the duty of the Indian agent to list or enroll all the land of noncompetent Indians as noncompetent land; that Act of March 1, 1907, 34 Stat. c. 2285, p. 1018, provided that the Secretary might authorize the sale of such land, but that the proceeds of such sales should not be paid to the noncompetent Indian to dispose of as he chose, but that the Commissioner of Indian Affairs should hold them and apply or supervise the application of them to the best interest of the Indian; that the land of Clown Woman had been enrolled or listed in the Indian agent's office as noncompetent land by the issue clerk to whom Kelley had deputed the duty of determining the character and listing such lands; that Clown Woman had made an application for a sale of her land as noncompetent land under this act of March 1, 1907, and a notice thereof had been posted

at the agency before the patent in fee simple was issued; and that Kelley so conducted the proceedings for that patent that the issue clerk in charge of the noncompetent land had no notice or knowledge of them until after the patent had been received at the Indian agency. The court is unable to resist the conclusion that Clown Woman was incompetent and incapable of managing her own affairs, and especially of selling her land and caring for, managing, and disposing of its proceeds within the meaning of the first proviso of Act May 8, 1906, c. 2348, 34 Stat. 182, 183; that Debell, Kelley, and Courtis could not have been ignorant of this fact when they procured the patent and when the deed was obtained from Clown Woman; that Debell and Courtis with knowledge of this fact caused or aided Clown Woman to procure the patent in fee simple on false representations, and induced her to convey her land to Courtis, and through him to Debell, in violation or illegal evasion of the restriction on its alienation, the policy and the legislation of the nation for the purpose of preventing incompetent Indians from parting with their land and for the purpose of protecting and preserving their property and its proceeds for their use and benefit.

[2, 3] A single question remains. Should the United States be permitted to recover this land without refunding to Debell the $2,000 he paid to Clown Woman for it? While it is true that the United States is not liable for malfeasance or misfeasance of its officers or servants, it is also true that a court of equity may condition, and ought to condition, its grant of relief by such requirements as are just and equitable, although those requirements may not be enforceable in any other way (Farmers' Loan & Trust Co. v. Denver, L. & G. R. Co., 126 Fed. 46, 51, 60 C. C. A. 588, 593); that the equities of the United States appeal to the conscience of a chancellor with the same, but with no greater or less, force than those of a private corporation or individual in like circumstances (State of Iowa v. Carr, 191 Fed. 257, 266, 112 C. C. A. 477, 486); that they are governed by the same equitable rules and principles; that he who seeks equity ought to do equity; and that a court of chancery may vary, qualify, restrain, and modify the remedy it applies so as to do equity and avoid inequity to mutual and adverse claims and to the substantial rights of the parties. Jones v. Missouri Edison Electric Co., 144 Fed. 765, 781, 75 C. C. A. 631. The action of the United States in issuing the patent in fee, action which a reasonably watchful and just administration of the law would have prevented, certainly assisted, if it did not invite, the acts of Debell and Courtis, and it undoubtedly resulted in Debell's payment of the $2,000 to Clown Woman, which he would otherwise have retained. Clown Woman used part of that money for her own benefit and support, and she gave part of it to others. The United States ought to have sold her land under the act of March 1, 1907, and to have held the proceeds of that sale in trust, and to have expended, or caused them to be expended, for her support and comfort. A consideration of all the facts and circumstances surrounding this case, in the light of the principles and rules of equity to which reference has been made, leads the court to the conclusion that the avoidance of the patent, the

deed to Courtis, and the deed to Debell should be conditioned by the repayment to Debell of the $2,000 he paid to Clown Woman for this land, and upon that condition the patent and the deeds should be set aside.

The decree below must therefore be reversed, and the case must be remanded to the district court, with instructions to render a decree to the effect that on condition that the United States pays to Debell the sum of $2,000 within three months after the entry of the decree, the patent to Clown Woman, her deed to Courtis, and Courtis' deed to Debell be set aside and held for naught; that in case the $2,000 is not thus repaid, the land in controversy be sold at public sale, after due notice, under the direction of the court; that the parties to this suit and all persons claiming under them be thereby estopped from claiming this land, and that the title thereto be confirmed in the purchaser at the sale; that $2,000 of the proceeds thereof be paid to Debell and the remainder thereof be paid to the United States and held and applied by it to the use and benefit of Clown Woman and her heirs in the same way that it would have been held and applied if those proceeds had been realized from the sale of the land as noncompetent land, pursuant to the provisions of Act of March 1, 1907, 34 Stat. c. 2285, p. 1018, and that the defendants pay the costs of this suit. The decree may contain such other provisions, not inconsistent with the views expressed herein, as the court below may deem proper.

COLUMBIA DIGGER CO. v. SPARKS et al.

(Circuit Court of Appeals, Ninth Circuit. November 8, 1915.)

No. 2560.

1. PRINCIPAL AND SURETY ⟹113—RIGHTS OF SURETY—APPLICATION OF PAYMENTS.

Sureties on the statutory bond of a contractor for a public improvement, conditioned for the faithful performance of the contract and the payment of all claims for labor and materials, have the right to have payments made by the contractor to a materialman, from proceeds of the contract applied in payment for material furnished under such contract and are not bound by an application of such payments to a preexisting indebtedness.

[Ed. Note.—For other cases, see Principal and Surety, Cent. Dig. §§ 235–239; Dec. Dig. ⟹113.]

2. COURTS ⟹365—FEDERAL COURTS—FOLLOWING STATE DECISIONS.

A federal court should not refuse to follow a rule established by the Supreme Court of a state on the faith of which the parties presumably contracted, unless that rule is against the very decided weight of authority.

[Ed. Note.—For other cases, see Courts, Cent. Dig. §§ 950, 952, 955, 969–971; Dec. Dig. ⟹365.

Conclusiveness of judgment between federal and state courts, see notes to Kansas City, Ft. S. & M. R. Co. v. Morgan, 21 C. C. A. 478; Union & Planters' Bank of Memphis v. City of Memphis, 49 C. C. A. 468; Converse v. Stewart, 118 C. C. A. 215.]

Rudkin, District Judge, dissenting.

In Error to the District Court of the United States for the Southern Division of the Western District of Washington; Edward E. Cushman, Judge.

Action at law by the Columbia Digger Company against M. R. Sparks and C. A. Blurock. Judgment for defendants, and plaintiff brings error. Affirmed.

The plaintiff in error commenced an action against the defendants in error to recover the sum of $6,189.88 alleged to be due for crushed rock which it had furnished to certain contractors in a public improvement in the city of Vancouver, Wash.; the defendants in error having been the sureties on the bond given by the contractors in pursuance of the provisions of chapter 6, title 8, Remington & Ballinger's Annotated Code and Statutes of Washington. It was alleged in the answer of the defendants in error that an agreement had been entered into between the plaintiff in error and the contractors to the effect that the money received from time to time by the contractors upon the estimates of the city engineer was to be applied upon a previous unsecured indebtedness of the contractors to the plaintiff in error, and that the plaintiff in error would look to the sureties for the material furnished for the improvement, and that such agreement was without the knowledge or consent of the sureties, and that payments from time to time were made to the contractors by the city, based upon the engineer's estimates, and that the contractors paid the money so received by them from the city to the plaintiff in error, and that the sum so received was in excess of the cost of the material furnished by the plaintiff in error, which was used in the improvement of the street. These allegations were denied by the plaintiff in error. Upon the issues presented, a jury trial having been waived, the court made findings of fact, the substance of which are as follows:

That the contractors furnished a bond as required by the provisions of the law of Washington above referred to, and that the defendants in error were the sureties on such bond; that the contractors abandoned the contract, and the sureties were required to and did complete the improvement; that while the contractors were engaged in carrying out the contract they purchased from the plaintiff in error crushed rock amounting to the sum of $6,852.38; that after entering into the contract the contractors entered into an arrangement with the Vancouver Trust & Savings Bank, of Vancouver, Wash., whereby the monthly estimates coming from said improvement were assigned to said trust and savings bank, and in consideration thereof the trust and savings bank advanced money from time to time to the contractors for the carrying out of said contract, and for the payment of labor and material used and expended in the improvement; that the money received from the improvement by the said trust and savings bank, and by it paid to the contractors and to their creditors, was a sum far in excess of the value and cost of the material furnished by the plaintiff in error and used in the improvement; that the trust and savings bank paid to the plaintiff in error a sum in excess of the amount due the latter for the crushed rock furnished by it, and which was used in making the improvement; that the money so paid to the plaintiff in error was money which was paid by the trust and savings bank against the estimates for the improvement as the work progressed; that estimates were furnished by the city engineer, and the money paid to the plaintiff in error through the trust and savings bank was realized from the work and improvement on account of which the defendants in error were sureties, and were the same moneys for the collection and payment of which the sureties were obligated; and that the amount thus paid to the plaintiff in error by the trust and savings bank from money earned for improvement was in excess of the material furnished by the plaintiff in error and used in making the improvement.

From these findings of fact the court concluded that the money so received by the plaintiff in error from the city of Vancouver should be applied in payment for the material furnished by it and used in the improvement; that the plaintiff in error has received from money earned in making the

improvement a sum in excess of the material furnished and used in the improvement, and thereby plaintiff in error's claim is liquidated. A judgment was entered for the defendants in error for costs.

R. R. Giltner, Russell E. Sewall, and Guy C. H. Corliss, all of Portland, Or., for plaintiff in error.

Miller & Wilkinson, of Vancouver, Wash., for defendants in error.

Before GILBERT and ROSS, Circuit Judges, and RUDKIN, District Judge.

GILBERT, Circuit Judge (after stating the facts as above). [1] In determining the nature of the obligation of the sureties upon the bond the court below followed the decision of the Supreme Court of Washington in Crane Co. v. Pacific Heat & Power Co., 36 Wash. 95, 78 Pac. 460. The court in that case had under consideration the provisions of a bond given under the same statutory provisions as was the bond in the case at bar. The court held that where a surety company guarantees the faithful performance of a contract pursuant to the statute for the benefit of laborers and materialmen, and the contractor pays money received upon the contract to a party who furnished material for the improvement, and to whom the contractor was also indebted upon an old or unsecured account, the surety is not bound by an application of the money to the old account, but is entitled to have the same applied on the contract in discharge of its liability. Said the court:

"The Ætna Indemnity Company did not undertake to secure the payment to the respondent of any old claims which were then due and unsecured, or any claims other than the one which was the subject of the contract."

It is urged that Crane Co. v. Pacific Heat & Power Co., 36 Wash. 95, 78 Pac. 460, so followed and applied by the court below, is against the weight of authority. It is of course the general rule, as stated in 30 Cyc. 1228, 1233, and cited by the plaintiff in error, that a debtor paying money to his creditor has the primary right to direct the application of the payment, and that if he fail to make specific appropriation thereof the creditor may apply the payment to either of two or more debts which are owing to him from the debtor. But in 32 Cyc. 171, another doctrine is expressed which is directly applicable here. It is this:

"Where a surety has become responsible for the payment of money by the principal, and the latter receives money under his contract, which he pays over, the creditor or obligee has no right to apply such payments in any other way than to the relief of the surety."

To sustain the contention that Crane Co. v. Pacific Heat & Power Co. is against the weight of authority, three cases are principally relied upon: Merchants' Ins. Co. v. Herber, 68 Minn. 420, 71 N. W. 624; Bankers' Surety Company of Cleveland, Ohio, v. Maxwell, 222 Fed. 797, — C. C. A. —; People v. Powers, 108 Mich. 339, 66 N. W. 215. The Minnesota case announces the general rule that a surety cannot direct the application of payments made by a principal to another, and that he is bound by any application made by the principal

and the creditor, or either of them; but the court goes on to say that this rule applies only to cases where the principal makes the payment from funds which are his own, free from any equity in favor of the surety to have the money applied in payment of the debt for which he is liable, and that where there is a special equity in favor of the surety the latter is entitled to have the money applied according to that equity. If, as we hold, there was in the case at bar an equity in favor of the sureties to have the money applied in payment of the liabilities incurred by the contractor under the contract, the decision in the Minnesota case is authority in support of the doctrine last cited from Cyc. rather than against it. In Bankers' Surety Co. of Cleveland v. Maxwell there was no discussion of the question of the equitable rights of a surety in the application of payments. What the court held was that where one has funds in his hands belonging to a party who is indebted to him, a portion of which is secured and a portion unsecured, in the absence of a special direction from the debtor as to how the application should be made, he may apply such funds to the payment of his unsecured claim.

But the case principally relied upon is People v. Powers. In that case it appears that the bond was one to secure the payment by a paving contractor and subcontractors for all labor performed and material furnished upon a contract let by the city for the improvement of a street. The court held that the liability of the sureties on such a bond was not affected, as against the claim of a materialman, by the fact that the latter had received payment for an antecedent indebtedness against the contractor out of funds realized by the latter under his contract. It would seem that the conclusion of the court was principally influenced by the peculiar provisions and terms of the bond. Referring to cases cited to the contention that the payment of the antecedent debt was inequitable, the court said that those cases differed from the case at bar for the reason that in the cases cited:

> "There was privity of contract between the sureties and the obligee, and the bond upon its face undertook that the contract should be performed. By accepting it the obligee was in duty bound not to vary the contract in such a way as to increase the liability of the sureties."

And the court said that in the case of People v. Powers then under consideration, there was no actual privity of contract between the contractor and the sureties, unless the statute can be said to create one by requiring the bond, which was evidently intended for the former. In that respect People v. Powers differs from the present case, in that the sureties in the latter not only undertook and covenanted that the contractors should faithfully perform their contract, and should pay all claims for labor or work or material on account of subcontractors, materialmen, laborers, and contractors furnishing labor and material under said contract, but they covenanted with the city that the contractors should well and faithfully perform all the covenants and conditions in said contract, thus evidencing that "privity of contract between the sureties and the obligee" which was said to be lacking in People v. Powers.

The doctrine so announced in 32 Cyc. 171, and Crane Co. v. Pacific Heat & Power Co., is fully sustained by United States v. American Bonding & Trust Co., 89 Fed. 925, 32 C. C. A. 420, a case in which the Circuit Court of Appeals for the Fourth Circuit held that, where a firm supplied a contractor with materials for work, with reliance on the security furnished by the contractor's bond which was conditioned on full payment for work and materials, and payments were made by the contractor to the firm but were applied on a pre-existing debt, the firm could not recover on the bond. A similar state of facts existed in the case at bar for Hackett testified that he came to Vancouver and learned of the bond, and that the sureties were responsible, and that, relying upon the faith of the bond, he sold the material, and that he had an understanding with Rector that the plaintiff was to be paid for the material as the money was received from the city. In Bross v. McNicholas, 66 Or. 42, 133 Pac. 782, Ann. Cas. 1915C, 1272, the court said:

"While the authorities are not in harmonious accord, we think that, as a general proposition, the surety cannot direct the application of payments made by the principal and the creditor, or either of them. However, this rule is applicable solely in those cases where the principal makes the payment from funds which are his own and are free from any equity in favor of the surety to have the money applied in payment of the debt for which the surety is liable; but where the specific money paid, or property delivered to the creditor, is the identical money or property for the payment and delivery of which the debtor and his surety obligated themselves by the contract and undertaking, the surety is not bound by an application of the money or property to some other debt for which the surety is not liable. In such cases the surety is equitably entitled to have the money paid, or the property delivered, applied to the payment of the debt or the liquidation of the contract for which he is liable."

So in Crane Bros. Mfg. Co. v. Keck, 35 Neb. 683, 53 N. W. 606, the court held that:

"While as beween the debtor owing several debts and his creditor, where the former, at the time of payment of a sum of money, fails to designate the debt on which it is to be applied, the latter may do so, yet there is an exception to this rule, as where the money was received by the debtor from a third party whose property would be liable for the debt in case the money was not applied upon the third party's liability."

In First Nat. Bank v. City Trust, Safe Deposit & Surety Co., 114 Fed. 529, 52 C. C. A. 313, this court affirmed the equitable rule, which in its principle is applicable to the case at bar, that the claim and equity of the surety in the fund to be created arises when he enters into the contract of suretyship, and that subsequent to that date the contractor has no power to create a lien upon the payments to be made by the city and to make it paramount to the lien of the surety.

[2] This review of the authorities shows that the decision in Crane Co. v. Pacific Heat & Power Co. is not against, but is in accord with, the weight of authority. Not only that, but it announces a sound doctrine, which, in justice, should be applied to all such contracts as that which is here under consideration. That doctrine has become the settled rule in Washington, and the sureties on the contract in question had the right to rely upon it as the law of that state, and we may

assume that they did so when they became sureties upon the contract. A federal court ought not to upset the rule thus established by the Supreme Court of a state for the guidance of its own citizens, unless that rule is against the very decided weight of authority. In Detroit v. Osborne, 135 U. S. 492, 498, 10 Sup. Ct. 1012, 1013 (34 L. Ed. 260), it is said:

"There should be, in all matters of a local nature, but one law within the state; and that law is not what this court might determine, but what the Supreme Court of the state has determined."

And in Equitable Life Assurance Soc. v. Brown, 213 U. S. 25, 44, 29 Sup. Ct. 404, 410 (53 L. Ed. 682), the court said:

"The decisions of the highest court of New York are therefore binding upon this court as to the meaning and effect of the charter of the defendant, and as it is a New York company, and the contract is a New York contract, executed and to be carried out therein, its meaning and construction, as held by the highest court of the state, will be of most persuasive influence, even if not of binding force."

The judgment is affirmed.

RUDKIN, District Judge (dissenting). Reduced to its simplest form, the question before the court is this: A firm of contractors enters into a contract with a municipal corporation for the improvement of one of its streets, and executes the customary statutory bond, conditioned for the payment of claims for labor and material. A materialman furnishes material to the contractors, a part of which is used in this street improvement, and a part is otherwise used or disposed of. The contractors make payments from time to time to the materialman, without any designation or application of the payments so made, and the materialman, without notice or knowledge of the source from which the contractors received their money, applies the payments on account of the material which was not used in the street improvement. I say without notice or knowledge of the source from which the money came, because notice is neither alleged in the answer, nor found by the court, and the pleadings and findings must support the judgment. Under these facts the court holds that payments thus made and applied by the creditor must now be reapplied on account of material used in the street improvement and secured by the bond.

From this conclusion I feel constrained to dissent. If the materialman had notice or knowledge that the money received from the contractors came from the city contract, there would be some equity and justice in requiring it to apply the payments on the account secured by the bond; and some of the authorities so hold, notably the Supreme Court of the state of Washington, as appears from the case of Crane Co. v. Pacific Heat & Power Co., 36 Wash. 95, 78 Pac. 460, cited in the majority opinion. If the case stopped here, I might acquiesce in the judgment, although I do not concede that the ruling is supported by the weight of authority. In People v. Power, cited in the majority opinion, the statute was the same, the bond was the same, and the facts were the same, yet the court upheld the right of the creditor to apply the payments as he chose, for reasons which I deem unanswer-

able. In the Bankers' Surety Case, from the Fourth Circuit, the law was the same, and the facts were even stronger in favor of the surety than here, for there the employé, who was seeking to recover on the bond, himself drew the money which he applied on a pre-existing debt, and therefore had full knowledge of the fact that the money came from the government contract. The fact that the court in that case was content to rest its decision on an elementary principle of law does not detract from the weight of the authority, unless that principle was misapplied. There is a direct analogy between an action on a bond of this kind and a mechanic's lien case, the bond taking the place of the lien, and the surety taking the place of the owner. And if the surety has a right to insist that money paid by the city shall be applied on claims secured by the bond, the owner of a building has an equal or even greater right to insist that money paid by him shall be applied on claims for which his property is liable; but the rule of law is otherwise:

"Where the lien claimant at the time of receiving a payment from the owner or the contractor has other claims against the person by whom such payment is made, the effect of the payment upon the lien depends upon whether the payment was applied to the lienable claim, and the application of such payments is governed by the general rules on the subject. If the debtor applies the payment, his application governs; but if he does not do so, the creditor may apply the payment on whichever debt he chooses, and if he applies it to a debt other than the one for which the lien is claimed, as he is entitled to do, the payment does not discharge or reduce the lien." 27 Cyc. 294, and cases cited.

But, whatever the rule may be, where the creditor has notice of the source from which the payments came, the rule is well settled that in the absence of such notice he may apply the payments as he chooses, and his application will govern. Such should be the law. The contractor is not required to pay over the money received from the city to laborers or materialmen by either the statute or the conditions of the bond. He is left at liberty to conduct his own business in his own way. The money received on the contract is his to apply or spend as he chooses. It was conceded on the argument that the contractors might have applied the money received from the city in payment of their private debts, other than the secured debt, and that the sureties could not complain. It was likewise conceded that, if the contractors owed the plaintiff in error the unsecured debt only, they might pay that debt, and the plaintiff in error might accept the payment with full knowledge of the fact that the money was received from the city contract. But because the plaintiff in error happened to hold two claims, instead of one, it is denied that privilege.

The decision of the majority exhibits a tender regard for the rights of sureties, but a woeful disregard for the obligation of private contracts. It places restraints on the free use and exchange of money which have not heretofore received judicial sanction. In that respect it stands unsupported and alone. In Crane Co. v. Pacific Heat & Power Co., supra, the answer alleged that at the time of the application of the payments the creditor knew that the money came from the board of directors of the school district on account of the school

contract, which was secured by the bond there in suit. True, the opinion seems to attach no importance to that averment; but the ruling of the court was explained in Hughes & Co. v. Flint, 61 Wash. 460, 112 Pac. 633, where the same principle was involved. In the latter case, speaking through Mr. Justice Chadwick, the court said:

"In Crane Co. v. Pacific Heat & Power Co., 36 Wash. 95 [78 Pac. 460], it was held that the answer of a surety, alleging that plaintiff had received and credited money paid on a particular contract, *knowing its source*, to other accounts, stated a defense; and, further, that *knowing the source of the payment* the materialman could not apply payments under the general rule to the prejudice of a surety on the contractor's bond. In principle that case is like unto this. The right to apply the payments to the older or other accounts was denied, *because the lien claimant had notice that the money was paid on the contract which the surety company had underwritten.* The owner of land, who lets a contract for the erection of a building upon it, is an involuntary debtor, made so by the terms of a statute; and where he has made a payment on his contract, and the amount thereof has passed to the materialman *having notice of the contract, and the source of the payment*, or the payment being made by check bearing words which import an equity in the drawer, so as to exempt it from the provisions of the Negotiable Instruments Act, equity and fair dealing demand that the owner should not be made to pay his debt over again."

It will thus be seen that the creditor is only denied the right to apply payments where he has actual notice of the source from which the money came. It is apparent from the opinion in United States v. American Bonding & Trust Co., 89 Fed. 925, 32 C. C. A. 420, also, that the creditor had notice that the money came from the government contract. Besides, there were many equities in that case in favor of the surety that are not found in this record, and, as already stated, in a later case from the same court, a different conclusion was reached under facts similar to those presented in the case at bar. Under the decision of the majority, if a materialman furnishes material to a contractor who is constructing different buildings subject to the lien laws of the state, or different public works secured by bond as in this case, he must, before accepting a payment, inquire where his debtor received the money. This would ordinarily be deemed an impertinence at best, but even the impertinence will not avail; for, under the ruling of the majority, all payments must be applied on the secured claims under an inexorable rule of law.

I think I have shown that the decision of the majority is not in harmony with the decisions of the Supreme Court of the state; but, even if it were, the question here involved is one of general law, which must be decided the same way by this court in every case, whether the question arises in an action on a bond given under the federal statute or under the statute of one of the states. In my opinion the special findings disclose no defense to the action, and the judgment should be reversed.

ISBELL v. UNITED STATES.

(Circuit Court of Appeals, Eighth Circuit. November 13, 1915.)

No. 4279.

(Syllabus by the Court.)

1. CRIMINAL LAW ⟹1036—PRESENTATION FOR REVIEW—SUFFICIENCY OF EVIDENCE—REQUEST FOR DIRECTED VERDICT.

A request by a defendant at the close of the evidence for a directed verdict in his favor presents to the trial court for decision the question of law whether or not there is any substantial evidence to sustain a verdict against him, and no farther specification to the trial or the appellate court of the basis of the request is requisite to a review by the appellate court of the refusal of the request on the ground that there was no such evidence.

[Ed. Note.—For other cases, see Criminal Law, Cent. Dig. §§ 1631–1640, 2639–2641; Dec. Dig. ⟹1036.]

2. CRIMINAL LAW ⟹753, 1159—DIRECTION OF VERDICT—DECISION ON APPEAL—EVIDENCE.

Evidence of facts as consistent with innocence as with guilt is insufficient to sustain a conviction. Unless there is substantial evidence of facts which exclude every other hypothesis but that of guilt, it is the duty of the trial judge to instruct the jury to return a verdict for the accused; and where all the substantial evidence is as consistent with innocence as with guilt, it is the duty of the appellate court to reverse a judgment against him.

[Ed. Note.—For other cases, see Criminal Law, Cent. Dig. §§ 1713, 1727–1739, 3074–3083; Dec. Dig. ⟹753, 1159.]

3. INDIANS ⟹38—INTRODUCING LIQUOR INTO INDIAN COUNTRY—SUFFICIENCY OF EVIDENCE.

Introducing intoxicating liquor into that part of Oklahoma that was formerly the Indian Territory from without the state, in violation of Act March 1, 1895, c. 145, 28 Stat. 693. Evidence considered, and *held* insufficient to sustain a conviction.

[Ed. Note.—For other cases, see Indians, Cent. Dig. §§ 22, 64, 66; Dec. Dig. ⟹38.

Introducing intoxicating liquors into Indian country, see note to Joplin Mercantile Co. v. United States, 131 C. C. A. 171.]

Carland, Circuit Judge, dissenting in part.

In Error to the District Court of the United States for the Eastern District of Oklahoma; Ralph E. Campbell, Judge.

Thomas Isbell was convicted of unlawfully introducing liquor into what was formerly the Indian Territory, and brings error. Reversed and remanded, with directions to grant new trial.

William P. Thompson, of Vinita, Okl., for plaintiff in error.

D. H. Linebaugh, U. S. Atty., of Muskogee, Okl., and George Miller, Jr., Asst. U. S. Atty., of Eufaula, Okl.

Before SANBORN and CARLAND, Circuit Judges, and LEWIS, District Judge.

SANBORN, Circuit Judge. The defendant below, Thomas Isbell, was indicted, convicted, and sentenced to imprisonment for two years

and to pay a fine of $100 for introducing from without the state of Oklahoma into that portion of that state which was formerly the Indian Territory one quart of whisky and wine, in violation of the Act of Congress of March 1, 1895, 28 Stat. c. 145, p. 693. He assigns as error, among other things, that the court below refused his request, at the close of all the evidence, that it instruct the jury to return a verdict in his favor.

[1] Counsel for the United States meet this complaint with the contention that it presents no question for review because defendant's counsel failed to state any specific ground or reason for a directed verdict in his favor and quote these words as from the opinion of this court in Horn v. United States, 182 Fed. 721, 105 C. C. A. 163:

"Where no ground is assigned in the trial court as a basis for the direction of an acquittal, an assignment based on the overruling of the request therefor may be disregarded on appeal."

A careful reading of that opinion, however, fails to disclose that statement, or any decision to that effect. What was said on that subject was in these words:

"At the close of all the testimony, each of the defendants requested the court to direct the jury to return a verdict in his favor, which request was denied and an exception saved. No ground was assigned, or suggestion made, as a basis for this request. The assignment of error based upon this ruling is that the court erred in overruling this request. The attention of the trial court not having been called to any ground upon which the request was made, this assignment might well be disregarded for this reason alone. It is urged, however, in behalf of each defendant, that there is no testimony that would warrant a verdict against him, or sustain one if found, and that a verdict should have been directed in his favor for this reason. In view of this the testimony has been considered."

The court then proceeded through seven printed pages to state and review the testimony and declared its conclusions in these words:

"A careful and patient consideration of the entire testimony, in the light of the objections urged against its sufficiency forces the conclusion that it would have been error to have withdrawn it from the consideration of the jury, and that it is amply sufficient to sustain the verdict against each of the defendants. There was no error, therefore, in denying the requests for an instructed verdict in their favor." Horn v. United States, 182 Fed. 721, 730–737, 105 C. C. A. 163.

Thus it appears that the court did not consider, determine, and adjudge that an assignment of error based on the overruling of a request for a directed verdict might be disregarded on appeal where no ground for the request was assigned in the trial court, and it did not base its judgment against the plaintiffs in error upon that ground. On the other hand, it considered the alleged error in denying the requests, defeated the plaintiffs in error on the ground that the requests were rightfully refused, and its remark that, "the attention of the trial court not having been called to any ground upon which the request was made, this assignment might well be disregarded for this reason alone," was not a decision of the question it suggests on which the judgment of the court in any degree rested, but a mere dictum, which, in the felicitous language of Chief Justice Marshall, "ought not to control the judgment in a subsequent suit when the very point

is presented for decision." Cohens v. Virginia, 6 Wheat. 264, 398, 5 L. Ed. 257; King v. Pomeroy, 121 Fed. 287, 294, 58 C. C. A. 209. That remark is not, therefore, controlling in this case, in which the very point must necessarily be decided, and we proceed to its consideration.

At the close of the evidence in every trial by jury the question of law, not whether the weight of the evidence sustains the claims of the plaintiff or the defendant, but whether or not there is any substantial evidence to sustain the claim of the plaintiff, necessarily and unavoidably arises, and the duty rests upon the trial court to direct a verdict for the defendant if there is no such evidence. Brady v. Chicago G. W. Ry. Co., 114 Fed. 100, 105, 52 C. C. A. 48, 52, 53, 57 L. R. A. 712; Cole v. German Savings & Loan Soc., 124 Fed. 113, 121, 122, 59 C. C. A. 593, 601, 602, 63 L. R. A. 416; St. Louis Cordage Co. v. Miller, 126 Fed. 495, 508, 61 C. C. A. 477, 490, 63 L. R. A. 551; Chicago Great Western Ry. Co. v. Roddy, 131 Fed. 712, 713, 65 C. C. A. 470, 471; Western Union Tel. Co. v. Baker, 140 Fed. 315, 319, 72 C. C. A. 87, 91; First Nat. Gold Min. Co. v. Altvater, 149 Fed. 393, 397, 79 C. C. A. 213, 217; Missouri Pac. Ry. Co. v. Oleson, 213 Fed. 329, 330, 130 C. C. A. 31, 32.

A request by the defendant for a directed verdict as necessarily and unavoidably presents this question of law to the mind of the trial judge for decision and to the mind of every lawyer within hearing of the request. No statement to the court that the ground of it is the absence of substantial evidence to sustain the plaintiff's cause of action could call that ground more forcibly to its attention than the request itself, because that is the ground which first occurs to the mind and on which such a request is ordinarily based. It has been the practice of this court and of other appellate courts for many years to treat a request for a directed verdict for a defendant, without more, as a sufficient specification of the ground that there was no substantial evidence to sustain a verdict for the plaintiff and to review refusals to grant such requests. Chicago, Milwaukee & St. Paul Ry. Co. v. Bennett, 181 Fed. 799, 801, 104 C. C. A. 309, 311; Hedderly v. United States, 193 Fed. 561, 571, 114 C. C. A. 227, 237; Atchison, Topeka & S. F. Ry. Co. v. Meyers, 76 Fed. 443, 444, 447, 22 C. C. A. 268, 269, 272; Wiborg v. United States, 163 U. S. 632, 658, 16 Sup. Ct. 1127, 1197, 41 L. Ed. 289.

Indeed, this court has gone so far as to sustain a directed verdict for the defendant on this ground, although it was not specified, and the verdict was directed on a specified, but untenable, ground, and that for the reason that the question of law whether or not there is any substantial evidence to sustain a verdict for the plaintiff always arises at the close of the evidence. Bank of Havelock v. Western Union Telegraph Co., 141 Fed. 522, 526, 527, 72 C. C. A. 580, 4 L. R. A. (N. S.) 181, 5 Ann. Cas. 515. For these reasons the conclusion is that a request by a defendant at the close of the evidence for a directed verdict in his favor presents to the trial court for decision the question of law whether or not there is any substantial evidence to sustain a verdict against him, and no farther specification to the trial

or to the appellate court of the basis of the request is requisite to a review by an appellate court of the refusal of the request on the ground that there was no such evidence.

[2, 3] Was there any substantial evidence that the defendant introduced whisky or wine into that portion of Oklahoma which was formerly the Indian Territory from without that state? There was substantial evidence of these facts: Isbell was the owner of drays and teams engaged in the transportation of goods at Vinita, in Oklahoma, and had been for many years. One Hostetler came to him with a bill of lading marked "HH," which usually means household goods, and told him he had a load of household goods at Chetopa, Kan., which he wanted hauled to Tiff City, Mo. It was conceded at the trial that the transportation of intoxicating liquors from Chetopa across the part of Oklahoma that was formerly the Indian Territory to Tiff City would not be a violation of the act of 1895, and the court so instructed the jury. Isbell took the bill of lading and agreed to haul the goods to Tiff City. His teams were in use, and he hired a team of one Newman, and employed one Silvey to drive the team and take the goods from Chetopa to Tiff City. Silvey obtained the team, took the bill of lading to Chetopa, loaded the goods, and was hauling them to Tiff City, across Oklahoma, by way of Vinita, when he was arrested by deputy marshals, and barrels of whisky in bottles and a box of bottles of wine, two or three of which were marked "For Mrs. Isbell," were found in his load and confiscated.

The decisive questions of fact became whether or not Isbell knew the goods were intoxicating liquors, and whether their destination was Missouri or Oklahoma. On the first question the evidence was the testimony of Isbell that he did not know they were liquors, that they were marked household goods on the bill of lading, that Hostetler told him they were household goods, and that he believed they were such, the testimony of Doggett that, at the trial of Silvey, Isbell had testified that he did not know the goods were intoxicating liquors, that they were not his goods, but were Hostetler's, that he knew Hostetler was in the whisky business at Tiff City, that Hostetler was present at Silvey's trial, and testified they were his goods, and the testimony of Robertson that Isbell testified at Silvey's trial that he was in partnership with Hostetler, and that the liquor was being hauled from Chetopa to Tiff City, because they did not want it delivered by the railroad company at Tiff City. After Robertson had testified, Isbell testified that he never was in partnership with Hostetler, that he never testified at Silvey's trial that he was in partnership with him, or that he knew the goods were intoxicating liquors, and that in fact Hostetler was a perfect stranger to him when he brought him the bill of lading. On the second question, whether the destination of the goods was Oklahoma or Missouri, the only evidence that it was Oklahoma was the fact that the liquor was seized on the road from Chetopa to Vinita, 18 miles from the former place, and that two or three of the bottles of wine were marked "For Mrs. Isbell." But there was no evidence that the bottles of wine were so marked by Isbell, or with his knowledge or consent. On the other

hand, Isbell testified that their destination was Tiff City, Mo., and Doggett and Robertson testified that at Silvey's trial Isbell testified that he was hiring Silvey and the team to haul them to Tiff City, Mo.

If, as Isbell testified, he was causing the goods to be transported from Chetopa, across a part of Oklahoma, to Tiff City, he was innocent of a violation of the law. It was essential to his lawful conviction that there should be proof, beyond a reasonable doubt, that he was knowingly taking them into Oklahoma for consumption, sale, or use in that state, and the burden was on the government to make this proof. There was a legal presumption that he was innocent until he was proved to be guilty beyond a reasonable doubt. "Evidence of facts that are as consistent with innocence as with guilt is insufficient to sustain a conviction. Unless there is substantial evidence of facts which exclude every other hypothesis but that of guilt it is the duty of the trial judge to instruct the jury to return a verdict for the accused, and where all the substantial evidence is as consistent with innocence as with guilt it is the duty of the appellate court to reverse a judgment against him." Union Pacific Coal Co. v. United States, 173 Fed. 737, 740, 97 C. C. A. 578, 581; Vernon v. United States, 146 Fed. 121, 123, 124, 76 C. C. A. 547, 549, 550; Hayes v. United States, 169 Fed. 101, 103, 94 C. C. A. 449, 451; W. F. Corbin & Co. v. United States, 181 Fed. 296, 305, 104 C. C. A. 278, 287; Prettyman v. United States, 180 Fed. 30, 43, 103 C. C. A. 384, 397; Harrison v. United States, 200 Fed. 662, 664, 119 C. C. A. 78, 80; United States v. Richards (D. C.) 149 Fed. 443, 454; United States v. Hart (D. C.) 78 Fed. 868, 873, affirmed in Hart v. United States, 84 Fed. 799, 28 C. C. A. 612; United States v. McKenzie (D. C.) 35 Fed. 826, 827, 828.

The criticism of the first clause of the last sentence quoted, that under it the trial court must necessarily pass upon the weight of the evidence and the credibility of the witnesses, and that it is equivalent to saying that unless the trial judge believes the defendant guilty beyond a reasonable doubt he must direct a verdict of acquittal, has not been deemed sound for the following reasons: It is certain that evidence of facts as consistent with innocence as with guilt is not sufficient to sustain a conviction, and that at the close of every trial by jury it is the duty of the court upon request to consider and determine whether or not there is any substantial evidence of the guilt of the accused, and, if there is none, to instruct the jury to return a verdict for the defendant. If there is, at the conclusion of a trial, no substantial evidence of facts which exclude every other hypothesis but that of guilt, there is no substantial evidence of the guilt of the accused, for facts consistent with his innocence are never evidence of his guilt. Nor does the duty of the court to consider and determine whether or not there is substantial evidence of facts which exclude every other hypothesis but that of guilt require the court, in our opinion, to pass upon the weight of the evidence, the credibility of the witnesses, or to direct an acquittal unless he believes the defendant guilty beyond a reasonable doubt. It requires nothing of him but the performance of the ordinary duty which, upon request, devolves

upon him in every jury trial, the duty to determine whether or not at the close of the trial there is any substantial evidence against the defendant, and if there is none to direct a verdict in his favor. The judge is to consider and determine, not whether or not the weight of conflicting evidence or the preponderance of the credibility of contradictory witnesses establishes facts which exclude every other hypothesis but that of guilt, but only whether or not there is any substantial evidence whatever of such facts, and, if there is none, to direct a verdict in favor of the defendant. Nor does the discharge of this ordinary duty seem to us to require him to consider or determine in any case where the evidence is conflicting, or in any case in which there is any substantial evidence of the guilt of the defendant, whether in his opinion the defendant is innocent or guilty, much less does it require him to direct a verdict unless he believes him guilty beyond a reasonable doubt. In our opinion it requires nothing more of him than to consider and determine whether or not there is any substantial evidence against him, and if there is not to direct his acquittal.

Nor are we persuaded of the soundness of the contention that the rule that "where all the substantial evidence is as consistent with innocence as with guilt it is the duty of the appellate court to reverse the judgment against the accused" is unsound, or that it requires the appellate court to determine any question of fact except the question which it is always the province of the court to determine, whether or not there was any substantial evidence of the guilt of the accused. The rule is that where *all* the substantial evidence was as consistent with innocence as with guilt it is the duty of the appellate court to reverse the judgment against a defendant, not where there was a preponderance of the substantial evidence, or witnesses of the greater credibility in favor of his innocence, but where there was no substantial evidence, no substantial testimony nor credible witness whatever, of any facts inconsistent with the innocence of the accused. This is the only question the court is required or permitted to determine under this rule, and where there was any substantial evidence inconsistent with the innocence of the accused, although it may have been contradicted and overwhelmed by the testimony to the contrary, the weight of the evidence, the credibility of the witnesses and the guilt or innocence of the defendant are left to the determination of the jury. It is certainly the duty of an appellate court in a proper case to reverse a judgment against a defendant, where there is no substantial evidence to sustain it. There is no substantial evidence to sustain a judgment against an alleged criminal, where all the substantial evidence is as consistent with innocence as with guilt, where there is no substantial evidence whatever of facts inconsistent with his innocence, and in such a case it cannot be doubtful, as it seems to us, that it is the duty of the appellate court to read the evidence, to find out and decide whether or not there was any substantial evidence of facts inconsistent with his innocence, and, if there was none, to relieve him from the unjust judgment, and that is all that this rule requires of the appellate court. These views seem to us to have been sustained by the authorities cited under them above.

No witness came to testify that the destination of the goods was in the state of Oklahoma. All the testimony was to the effect that it was Tiff City, Mo., the route over which the goods were removed was not inconsistent with that destination, the marks "For Mrs. Isbell" on two or three wine bottles, unsupported by any proof tending to show who made them, do not rise to the dignity of evidence, and there was no substantial evidence, nothing but suspicion, that their destination was Oklahoma, or that Isbell was consequently guilty.

The judgment below is therefore reversed, and the case is remanded to the court below, with directions to grant a new trial.

CARLAND, Circuit Judge (dissenting in part). This case is here on writ of error. It is elementary that only questions of law may be considered. The question whether there is substantial evidence to support the verdict is a question of law. I concur in the result reached by the majority, for the reason that there is no substantial evidence to support the verdict upon some of the material issues. There are, however, certain propositions of law stated in the opinion of the majority in which I am unable to concur. The propositions referred to are as follows:

> "Unless there is substantial evidence of facts which exclude every other hypothesis but that of guilt it is the duty of the trial judge to instruct the jury to return a verdict for the accused, and where all the substantial evidence is as consistent with innocence as with guilt it is the duty of the appellate court to reverse a judgment against him."

This statement of the law received the approval of this court in Union Pacific Coal Co. v. United States, 173 Fed. 737, 97 C. C. A. 578. In view of the learning and ability of the judges who rendered the decision in the case cited, and of my Brothers who concur in the majority opinion, it is with some hesitation that I dissent from the propositions stated. Regarding the propositions, however, as fundamentally erroneous, I briefly state the reasons for my dissent. The first proposition is as follows:

> "Unless there is substantial evidence of facts which exclude every other hypothesis but that of guilt it is the duty of the trial judge to instruct the jury to return a verdict for the accused."

This rule, if enforced, in my judgment would constitute the trial judge the trier of the facts in every criminal case. It is urged in support of the same that it presents to the trial judge the question as to whether there is substantial evidence to support a verdict of guilty. I do not think this is so. In order for the trial judge to determine whether there is substantial evidence of facts which exclude every other hypothesis but that of guilt, he must necessarily pass upon the weight of the testimony, and this includes the passing upon the credibility of the witnesses. As stated, the proposition contended for is equivalent to saying that, unless the trial judge believes the defendant guilty beyond a reasonable doubt, he must direct a verdict of acquittal. Certainly this is not the law.

The next proposition is as follows:

"* * * And where all the substantial evidence is as consistent with innocence as with guilt it is the duty of the appellate court to reverse the judgment against him."

In view of the undoubted law that on a writ of error this court is limited to the consideration of questions of law, I am of the opinion that this rule of law is unsound. To determine whether all the substantial evidence in the case is as consistent with innocence as with guilt is to determine a question of fact. For illustration, suppose there are five witnesses in a case who testify to facts tending to show guilt, and the very same number of witnesses should testify directly contrary to facts tending to show innocence, may this court reverse the case because the evidence is as consistent with innocence as with guilt—surely not, for in order to determine whether the evidence is as consistent with innocence as with guilt this court must weigh the evidence, and there is included in this proceeding the determination of the credibility of the witnesses. In determining whether there is substantial evidence to support the verdict, the court does not pass upon a question of fact, but simply determines whether there is substantial evidence to support the verdict, regardless of its weight or credibility. I deem the keeping of court and jury within their legitimate spheres of sufficient importance to justify this dissent. The explanation of what the language which I object to means as set forth in the majority opinion demonstrates, in my opinion, that it would be well to omit the language objected to.

In re GRIGGS et al.

(Circuit Court of Appeals, Eighth Circuit. November 15, 1915.)

No. 165.

1. MANDAMUS ⟹41—PROHIBITION ⟹10—ABSENCE OF JURISDICTION.

In an action against nonresident executors, individually and as executors, in which the court had jurisdiction over defendants in both capacities, it was stipulated that the action was dismissed as to the defendants personally, and that any judgment for plaintiff should be entered against the defendants as executors. A judgment for plaintiff against the defendants as executors was reversed, on the ground that they could not bind the estate by the contract sued on. The District Court vacated the stipulation and ordered that the case stand against defendants in both capacities. *Held*, that there was no clear absence of jurisdiction, authorizing a writ of prohibition or mandamus, since, whether or not the court in vacating the stipulation was technically right, the effect of its action was no more than would have resulted from an amendment as to the character or capacity of the defendants, and the court, under the power as to amendments and the making of additional parties, could allow such an amendment.

[Ed. Note.—For other cases, see Mandamus, Cent. Dig. § 86; Dec. Dig. ⟹41; Prohibition, Cent. Dig. §§ 37-56; Dec. Dig. ⟹10.]

2. STIPULATIONS ⟹14—DISMISSAL—OPERATION AND EFFECT.

Assuming that the stipulation and the subsequent proceedings against the defendants solely as executors amounted to a dismissal of the defendants as individuals, though no order or judgment of dismissal was made, the dismissal was one without prejudice, and not a final adjudication in

---

⟹For other cases see same topic & KEY-NUMBER in all Key-Numbered Digests & Indexes

their favor; there having been no determination of the controversy between plaintiff and the defendants as individuals.

[Ed. Note.—For other cases, see Stipulations, Cent. Dig. §§ 24–37; Dec. Dig. ⟹14.]

3. STIPULATIONS ⟹14—STIPULATIONS TO DISMISS.

The stipulation did not show a contract of settlement and satisfaction of plaintiff's demand against the defendants as individuals.

[Ed. Note.—For other cases, see Stipulations, Cent. Dig. §§ 24–37; Dec. Dig. ⟹14.]

4. PARTIES ⟹65—BRINGING IN PARTIES AFTER DISMISSAL AS AGAINST THEM.

Where some of the defendants are dismissed from a case without prejudice, without a judicial determination or settlement of the cause of action against them, they may be brought back with leave of court, when justice requires, either at the same or a subsequent term, upon sufficient notice or process.

[Ed. Note.—For other cases, see Parties, Cent. Dig. §§ 100–107; Dec. Dig. ⟹65.]

Original petition by Clarence Griggs and another for a writ of prohibition or mandamus. Application denied.

James A. Brown, of Fergus Falls, Minn., and Boys, Osborn & Griggs, of Streator, Ill., for petitioners.

Before HOOK, Circuit Judge, and AMIDON and VAN VALKENBURGH, District Judges.

HOOK, Circuit Judge. This is an application by Griggs and Nash for a writ of prohibition or mandamus to prevent the United States District Court for the District of Minnesota and the Hon. Page Morris, as judge thereof, from exercising jurisdiction over them in their individual capacities.

[1] One Nadeau commenced an action in a state court of Minnesota against Griggs and Nash individually and as executors of the will of Solomon E. King, deceased, to recover for services in securing a purchaser for lands of the King estate in Minnesota which the will authorized the executors to sell. The cause was removed to the federal court. The defendants lived in Illinois, the domicile of the testator, but the court had jurisdiction of them, both as individuals and as executors. During the trial a stipulation was made as follows:

"That this action is dismissed as to Clarence Griggs personally, and William W. Nash personally, and that judgment upon any verdict which may be rendered herein in favor of the plaintiff shall be entered against Clarence Griggs and William W. Nash as executors of the estate of Solomon E. King, deceased."

A verdict for plaintiff followed, and judgment was accordingly entered against defendants as executors. On a writ of error obtained by them from this court, the judgment was reversed and the cause was remanded for a new trial. Griggs v. Nadeau, 221 Fed. 381, 137 C. C. A. 189. It was held that without authority of a statute, the will, or an order of a probate court having jurisdiction, neither of which was shown in the petition, the executors could not bind the estate by such a contract of employment as plaintiff alleged, but his

remedy was against his employers individually. When the mandate of this court went down, and after the term at which the stipulation was made and the verdict and judgment were entered, the District Court vacated the stipulation, and ordered that the case stand against the defendants in both capacities, individual and representative. This proceeding is to prevent the court from resuming jurisdiction of defendants as individuals.

The petitioners rely particularly upon In re Metropolitan Trust Co., 218 U. S. 312, 31 Sup. Ct. 18, 54 L. Ed. 1051. There one Pollitz brought a suit in a state court against the Wabash Railroad Company, the trust company and others. The railroad company, alleging diversity of citizenship and a separable controversy between it and the complainant, caused the case to be removed to the United States Circuit Court. The complainant moved to remand, but his motion was denied. The trust company then demurred to the bill of complaint, the demurrer was sustained, and, the bill not being amended, a decree of dismissal was entered in its favor. Thereafter a final hearing upon the merits resulted in a decree of dismissal as to the other defendants. The complainant appealed from this last decree, but not from the decree in favor of the trust company. The Circuit Court of Appeals held there was no separable controversy, and that the motion to remand should have been granted. It reversed the decree appealed from, and sent the case back to be remanded to the state court. Complainant then moved the Circuit Court to vacate the decree in favor of the trust company and to embrace that company in the remanding order. The court vacated the decree, and the trust company applied to the Supreme Court for a writ of prohibition or mandamus to prevent the exercise of jurisdiction over it. The Supreme Court held that the Circuit Court, in passing on complainant's motion to remand, had jurisdiction to determine whether a separable controversy existed, and its decision was an act within its judicial authority, subject to review upon appeal after final decree; also that, having decided to retain the cause, it had jurisdiction to decide the demurrer of the trust company, as well as to try the other issues, and that its decree sustaining the demurrer and dismissing the trust company was not affected by the complainant's appeal to which it was not a party; also that, the term of court at which the decree in favor of the trust company was entered having expired, the Circuit Court was without jurisdiction to vacate it. A writ of mandamus was accordingly awarded.

[2, 3] There are some important differences between the case at bar and the case cited. Here no order or judgment of the court was made on the stipulation dismissing the defendants as individuals. But if it be assumed that the stipulation and the subsequent proceedings against defendants solely as executors should be given that effect, still it does not appear that the dismissal was other than a voluntary act. The controversy between the plaintiff and the defendants as individuals does not appear to have been determined by the court. Its judgment upon the merits, as disclosed either by the plaintiff's petition or by the proofs at the trial, is not recited to have been invoked by either party or to have been judicially declared. The dismissal of

the defendants in their individual capacities was in effect a dismissal without prejudice, and not a final adjudication in their favor. In Haldeman v. United States, 91 U. S. 584, 23 L. Ed. 433, there were pleas in bar of former judgments on the same cause of action. In some of the pleas the judgment relied on was "that the said suit is not prosecuted, and be dismissed." The court said:

"This entry is nothing more than the record of a nonsuit, although the customary technical language is not used."

And the same effect was attributed to a judgment entry in the words "dismissed agreed." Ex parte Loung June (D. C.) 160 Fed. 251; Rincon Water & Power Co. v. Anaheim, etc., Co. (C. C.) 115 Fed. 543. Nor can it be reasonably contended that the stipulation shows a contract of settlement and satisfaction of the plaintiff's demand against the defendants as individuals. See Jacobs v. Marks, 182 U. S. 583, 21 Sup. Ct. 865, 45 L. Ed. 1241, where the order was:

"This cause having been settled, it is hereby discontinued by consent of both parties, without cost to either party."

[4] Where some defendants are dismissed from a case without prejudice, without judicial determination or settlement of the cause of action against them, they may be brought back with leave of court, when justice requires, either at the same or a subsequent term, upon sufficient notice or process. The power of a trial court as to amendments and the making of additional parties is broad enough for the purpose. In the case here the mandate of this court directed a new trial, and when the case again arose in the District Court it stood as though originally begun against defendants only as executors. No limitations were imposed upon the power of that court under statute or general principles of law to authorize amendments. When the case was dismissed as to defendants individually, they did not wholly leave the jurisdiction of the court. They remained as executors, and whatever change or enlargement by amendment might lawfully be done in such a situation the court in its discretion was free to authorize. It is not an unusual proceeding to change by amendment the character or capacity of a defendant of whom jurisdiction has been obtained. It has been held that a complaint against a defendant in a representative character may be amended to stand against him as an individual. Lucas v. Pittman, 94 Ala. 616, 10 South. 603; McDonald v. Ward, 57 Conn. 304, 18 Atl. 51; Tighe v. Pope, 16 Hun (N. Y.) 180; Fuller v. Insurance Co., 12 How. Prac. (N. Y.) 293. Also that a complaint against a defendant personally may be amended to proceed against him in a representative capacity. Hutchinson v. Tucker, 124 Mass. 240. The power of a court in respect of amendments is very broad, and has been exercised upon the pleadings and parties in many ways. We see no reason why a petition against defendants as executors may not be amended to stand against them also as individuals. Whether the District Court in vacating the stipulation was technically right or not, the effect of its action is no more than would have resulted from an amendment with leave which the court had power to grant. The case is not one of clear absence of jurisdiction.

The application is denied.

STOUT v. UNITED STATES.*

(Circuit Court of Appeals, Eighth Circuit. November 15, 1915.)

No. 3900.

1. BANKS AND BANKING ⟹257—NATIONAL BANKS—CRIMINAL PROSECUTIONS —INDICTMENT.

An indictment charged in substance that accused, while president of a national bank and by the use of the authority of his position, loaned its funds to a mill company, which was known by him and not known by the bank or its directors to be hopelessly insolvent, under circumstances naturally leading to the loss of the money loaned and so resulting, all with intent to injure and defraud the bank. *Held*, that this, with the details set forth, sufficiently stated an offense under Rev. St. § 5209 (Comp. St. 1913, § 9772), providing that every president of a national banking association, who willfully misapplies any of the moneys, funds, or credits of the association, shall be punished as therein provided.

[Ed. Note.—For other cases, see Banks and Banking, Cent. Dig. §§ 965, 966, 970-976; Dec. Dig. ⟹257.]

2. CRIMINAL LAW ⟹1159—APPEAL—QUESTIONS OF FACT.

On appeal in a criminal case, the question is whether the verdict was supported by substantial evidence, and not whether the proof of guilt was made beyond a reasonable doubt; that being a question for the jury.

[Ed. Note.—For other cases, see Criminal Law, Cent. Dig. §§ 3074-3083; Dec. Dig. ⟹1159.]

3. CRIMINAL LAW ⟹811—INSTRUCTIONS—SINGLING OUT TESTIMONY.

When an instruction in a criminal case proceeds upon a recital of facts and circumstances of which evidence has been received, and a deduction is drawn from them which, if adopted by the court, would be practically a direction to acquit, the recital should be full and comprehensive and not a mere sidelight on the case; and hence instructions singling out a part of the proof adduced as being insufficient to show guilt or criminal intent were properly refused.

[Ed. Note.—For other cases, see Criminal Law, Cent. Dig. §§ 1787, 1969-1972; Dec. Dig. ⟹811.]

4. CRIMINAL LAW ⟹829—INSTRUCTIONS COVERED BY THOSE GIVEN.

Where the charge contained a definite statement of the offense set forth in the indictment, and told the jury that accused could not be convicted of something else, an instruction that accused was not on trial for various defaults or misconducts which were enumerated was unnecessary, and properly refused.

[Ed. Note.—For other cases, see Criminal Law, Cent. Dig. § 2011; Dec. Dig. ⟹829.]

5. CRIMINAL LAW ⟹822—INSTRUCTIONS—CONSTRUCTION OF CHARGE AS A WHOLE.

Portions of the charge claimed to be objectionable should be viewed in their proper context.

[Ed. Note.—For other cases, see Criminal Law, Cent. Dig. §§ 1990, 1991, 1994, 1995, 3158; Dec. Dig. ⟹822.]

6. BANKS AND BANKING ⟹256—CRIMINAL OFFENSES—DEFENSES.

Where, though the directors of a national bank knew that loans were being made to a mill company upon so-called bills of exchange, with wheat tickets attached indicating the amount of wheat purchased by the mill company, there was evidence that it was accused, the president of the bank, and not the directors, who established this custom, that he alone knew the mill company was insolvent and was not keeping the wheat or

⟹For other cases see same topic & KEY-NUMBER in all Key-Numbered Digests & Indexes

*Rehearing denied January 24, 1916.

the flour product as security for the loans, and that in fact the loans were wholly unsecured, that he purposely refrained from informing the directors of the true condition, and in some instances expressly misrepresented it to them, the knowledge of the directors of the custom and the apparent form of the loans, and their reliance upon the semblance of security which did not in fact exist, did not relieve accused of liability for misapplying the funds of the bank.

[Ed. Note.—For other cases, see Banks and Banking, Cent. Dig. §§ 958–964, 967; Dec. Dig. ⚷256.]

7. CRIMINAL LAW ⚷830—INSTRUCTIONS—FAILURE OF ACCUSED TO TESTIFY.

Act March 16, 1878, c. 37, 20 Stat. 30 (Comp. St. 1913, § 1465), provides that a person charged with crime shall at his own request, but not otherwise, be a competent witness, and that his failure to make such request shall not create any presumption against him. On a trial on which there had been no wrongful comment on defendant's failure to testify requiring correction by the court on its own motion, defendant requested an instruction that he had seen fit to rest his case upon the government's evidence, including such testimony as might have been elicited upon cross-examination of the government's witnesses, that he had a perfect right to do this, and that this fact must in no wise prejudice the jury against him, but that they should take into consideration the entire evidence introduced, etc. *Held*, that the refusal of such instruction was not error, as the claim of immunity or protection was broader than the statute, since, while there should be no hurtful presumption from the failure of defendant to testify personally, this does not necessarily exclude a prejudice resulting from an entire absence of affirmative evidence in defense, nor inferences from a failure to produce evidence peculiarly within defendant's knowledge or control, not requiring personal disclosures or his presence upon the witness stand, and moreover the court might well have understood that the purpose of the instruction was to assail the sufficiency of the government's evidence, rather than to claim the immunity afforded by the statute.

[Ed. Note.—For other cases, see Criminal Law, Cent. Dig. §§ 2012, 2017; Dec. Dig. ⚷830.]

8. CRIMINAL LAW ⚷656, 721—TRIAL—COMMENTS ON FAILURE OF ACCUSED TO TESTIFY.

Act March 16, 1878, c. 37, 20 Stat. 30 (Comp. St. 1913, § 1465), restrains both court and counsel from commenting upon the failure of accused to testify.

[Ed. Note.—For other cases, see Criminal Law, Cent. Dig. §§ 1524–1533, 1672; Dec. Dig. ⚷656, 721.

Comments of counsel and instructions on failure of accused to testify, see note to McKnight v. United States, 54 C. C. A. 373.]

9. CRIMINAL LAW ⚷827—INSTRUCTIONS—FAILURE OF ACCUSED TO TESTIFY.

If requested, defendant is entitled to an affirmative instruction that his failure to testify shall not create any presumption against him, even in the absence of wrongful comment; but the instruction requested, if not in the language of the statute, should fairly express its thought, so the court may be apprised of what is desired.

[Ed. Note.—For other cases, see Criminal Law, Cent. Dig. § 2006; Dec. Dig. ⚷827.]

10. CRIMINAL LAW ⚷857—IMPEACHING VERDICT—MISCONDUCT OF JURY.

A verdict in a criminal case cannot be impeached by showing that the jurors discussed defendant's failure to testify, where there was no outside improper influence upon the jury, and whatever occurred was in the jury room among the jurors alone.

[Ed. Note.—For other cases, see Criminal Law, Cent. Dig. §§ 2054, 2055; Dec. Dig. ⚷857.]

In Error to the District Court of the United States for the Western District of Oklahoma; John H. Cotteral, Judge.

Alvin H. Stout was convicted of misapplying moneys and credits of a national bank of which he was president, and he brings error. Affirmed.

M. C. Garber, of Enid, Okl. (Garber & Kruse, of Enid, Okl., on the brief), for plaintiff in error.

Isaac D. Taylor, Asst. U. S. Atty., of Guthrie, Okl. (John A. Fain, U. S. Atty., of Oklahoma City, Okl., and W. B. Herod, Asst. U. S. Atty., of Guthrie, Okl., on the brief), for the United States.

Before HOOK and CARLAND, Circuit Judges, and AMIDON, District Judge.

HOOK, Circuit Judge. Stout was convicted and sentenced for misapplying the moneys and credits of the First National Bank of Cherokee, Okl., of which he was president, to the use and benefit of the Cherokee Mill & Elevator Company. Rev. St. § 5209 (Comp. St. 1913, § 9772).

[1] He urges here that the fifth count of the indictment under which alone conviction was had does not charge a public offense. We think it does. In the prolixity of words there is plainly discernible the substance of a charge that the accused, whilst president of the bank and by use of the authority of his position, loaned its funds to the mill company, which was known by him to be hopelessly insolvent, not so known to the bank or its directors, and under circumstances naturally leading to the loss of the money loaned, and so resulting—all with intent to injure and defraud the bank. This, with the details set forth, sufficiently states an offense under the statute.

[2] It is also contended that the evidence was not sufficient to prove the offense. The question here is not whether we regard the proof as having been made beyond a reasonable doubt. That measure was for the jury; on appeal, the inquiry is whether the verdict of guilt was supported by substantial evidence. We think there was substantial evidence of all the essential facts of the case against the accused. As to some a different conclusion might perhaps have been drawn, but there was direct evidence upon them which was fairly submitted to the jury under instructions carefully explaining and guarding his rights; and they found against him. This was particularly so as to the ignorance of the directors of the bank of the financial condition of the mill company to which the bank's funds were loaned, its hopeless insolvency, the true nature of the loans made by the accused, including the one set forth in the fifth count of the indictment, that they were not intended as bills of exchange on which the drawers were to be held, and were not being secured either by mortgage bonds of the mill company, as represented by the accused, or by warehouse or elevator receipts, or by grain or flour held for the purpose. On the other hand, there was no doubt but that the accused was fully informed of the conditions which signified certain ultimate loss to the bank. The jury might well have been convinced that he exercised in fact a dominating control over the business of the bank, and also had much actively to

do with the finances of the mill company by way of obtaining loans for it both from his bank and also from other sources from which he secretly received personal compensation. They were also justified in finding the requisite willful, unlawful intent from evidence of his reckless disregard of the bank's interests and welfare and his deception of the directors, in some instances by suppression of the facts and in others by misrepresentations as to the financial condition of the mill company and the security for the loans. There was much testimony on those matters, and the jury were warranted in believing it. One trouble with the arguments for the accused is in the failure to distinguish between the power and the responsibilities of one occupying a position of trust.

[3-6] Complaint is made of the refusal of the trial court to give certain instructions and of parts of the charge as given. Excepting in two particulars little need be said upon this subject. Some of the instructions requested were substantially embodied in the charge of the court, though not in the precise language of counsel. Others improperly singled out a part of the proof adduced as being insufficient to show guilt or criminal intent. When an instruction asked proceeds upon a recital of facts and circumstances of which evidence has been received, and a deduction is drawn from them which, if adopted by the court, would be practically a direction to acquit, the recital should be full and comprehensive, and not a mere sidelight on the case. One request sought an instruction that the accused was not on trial for various defaults or misconducts which were enumerated. But the charge of the court contained a definite statement of the offense set forth in the fifth count, and that he could not be convicted of something else. It was unnecessary to negative the other matters in detail. The parts of the charge given which are criticized are not objectionable, when viewed as they should be in their proper context.

An instruction was asked that if the loans of the bank to the mill company, of which that specified in the fifth count was one, were pursuant to a custom of the bank, of which the directors, or a majority of them, or of their committee in charge, had knowledge, and assented to, relying upon the wheat purchased by the mill company, with the moneys loaned, as sufficient security for repayment to the bank, the accused should be acquitted. The recitals cover but a part of the case against the accused, and imperfectly at that. Undoubtedly the directors knew the loans were being made upon so-called bills of exchange with wheat tickets attached indicating the amount of wheat purchased by the Mill Company. But there was evidence that it was the accused, not the directors, who established the custom referred to, that he alone knew the Mill Company was insolvent, that it was not keeping the wheat in its mill or elevators, or the flour product, as security for the loans, and that in fact the loans were wholly unsecured. There was also evidence that he purposely refrained from informing the directors of the true condition, and in some instances expressly misrepresented it to them. Under these circumstances the knowledge of the directors of the custom and the apparent form of the loans, and their reliance upon the semblance of security which did not in fact exist, would not

relieve the accused. The indictment was framed and the case was tried as though the knowledge and approval of the directors would be a defense. As to this, see Flickinger v. United States, 150 Fed. 1, 79 C. C. A. 515.

[7-9] The most debatable question arises from the failure of the court to give that part of the following requested instruction which we have italicized:

"*The defendant has seen fit to rest his case upon the evidence which has been introduced on behalf of the government, including such testimony as may have been elicited upon cross-examination of the government's witnesses. You are instructed that he had a perfect right to do so, and that fact must in no wise prejudice you against him.* But you should take into consideration the entire evidence which has been introduced in the case, including such testimony as may appear to you to be in his behalf, bearing in mind at all times that, before the defendant can be convicted of the crime charged in the indictment, you must be satisfied beyond a reasonable doubt of his guilt from the evidence introduced in the case, and that the presumption of his innocence continues through every part of the case until overcome to your satisfaction by the evidence beyond such reasonable doubt. And in arriving at a verdict in this case you should take into consideration all of the evidence which has been introduced, and if after a full and careful consideration thereof you are uncertain or have a reasonable doubt as to the guilt of the defendant, it is your duty to find him not guilty."

All not italicized was fully covered in the general charge. The accused, who had offered neither himself as a witness nor other evidence in defense, now urges that there has been a violation of his right and immunity under Act March 16, 1878, 20 Stat. 30, c. 37, which provides:

"That in the trial of * * * indictments * * * against persons charged with the commission of crimes, * * * in the United States courts, * * * the person so charged shall, at his own request but not otherwise, be a competent witness. And his failure to make such request shall not create any presumption against him."

This statute restrains both court and counsel from comment upon the failure of the accused to testify. Wilson v. United States, 149 U. S. 60, 13 Sup. Ct. 765, 37 L. Ed. 650. If he asks it, he is entitled to an affirmative instruction upon the subject, even in the absence of wrongful comment. But an instruction requested, if not in the language of the statute, should fairly express its thought, so the court may be apprised of what is desired. Here nothing had occurred during the trial requiring correction by the court on its own motion, and its attention was not directed to the immunity, unless by the italicized words above. They make no direct reference to the failure of the accused to testify and the absence of presumption against him on that account. On the contrary, it might have been inferred that the purpose was to assail the sufficiency of the government's evidence against the accused. That matter was fully covered in the court's charge to the jury. The court may well have regarded the instruction asked as a mere reassertion of the claim of counsel when the government rested its case that:

"The defendant. Stout elects to rest his case upon the evidence offered by the government and the facts and circumstances as they have been developed in the cross-examination of the witnesses for the government, believing that

it has been conclusively shown that the transactions charged in the indictment were bona fide, made in good faith, and without any intent to injure or defraud the bank."

But, if this be not so, the claim of immunity or protection seems broader than the statute. The accused refrained, not only from testifying himself, but also from offering any evidence whatever, by other witnesses or by records, and he seeks to enlarge the immunity from a presumption against him on the former ground to an immunity from prejudice on account of the latter. We think that is inadmissible. There should be no hurtful presumption from the failure of an accused personally to testify, but that does not necessarily exclude a prejudice resulting from an entire absence of affirmative evidence in defense, nor inferences from a failure to produce evidence peculiarly within his knowledge or control, not requiring personal disclosures or his presence upon the witness stand.

[10] Complaint is also made that on a motion for a new trial the accused was not allowed to show that after the case was submitted to the jury, and while they were deliberating upon it in the jury room, the jurors discussed his failure to testify in his own behalf. The information of this incident came from remarks by two jurors after the verdict was returned, and the accused asked a subpœna for them and other jurors to appear before the court and testify about it. There was no claim of outside improper influence upon the jury, as in Mattox v. United States, 146 U. S. 140, 13 Sup. Ct. 50, 36 L. Ed. 917. Whatever occurred was in the jury room, among the jurors alone, and became wound up in the verdict. The verdict cannot be impeached in that way. McDonald v. Pless, 238 U. S. 264, 35 Sup. Ct. 783, 59 L. Ed. 1300; Id., 206 Fed. 263, 124 C. C. A. 131; Hyde v. United States, 225 U. S. 347, 32 Sup. Ct. 793, 56 L. Ed. 1114, Ann. Cas. 1914A, 614.

We discover no error in the admission of evidence. In a case of this character the scope of inquiry is necessarily very broad, and the proper limits were not transgressed.

The sentence is affirmed.

CRESCENT MILLING CO. v. H. N. STRAIT MFG. CO.*

(Circuit Court of Appeals, Eighth Circuit. October 12, 1915.)

No. 4331.

1. APPEAL AND ERROR ⟹889—REVIEW—THEORY OF CASE.

In an action on a contract for the sale of an engine, plaintiff served notice of a motion for an order permitting an amendment of the complaint to allege that defendant had retained and used the engine. Though this motion was not brought to the court's attention, and no order permitting an amendment was made, the trial court treated the complaint as amended in accordance with the notice, and evidence was received without objection to show defendant's use of the engine. *Held*, that the Circuit Court of Appeals would treat the complaint as so amended.

[Ed. Note.—For other cases, see Appeal and Error, Cent. Dig. §§ 3621, 3622; Dec. Dig. ⟹889.]

⟹For other cases see same topic & KEY-NUMBER in all Key-Numbered Digests & Indexes

*Rehearing denied January 24, 1916.

2. SALES ⟹126—WARRANTIES—BREACH OF WARRANTY—OPERATION AND EFFECT.

A contract for the sale of an engine contained certain guaranties, and provided for an endurance test, by means of which the engine should be shown to possess the qualities specified, and that, if the engine did not fulfill the test or satisfy the guaranties, the purchaser should not be required to pay therefor, and the engine should be forthwith removed. The test left the question whether the engine fulfilled the guaranties in controversy, and the purchaser, though continuing to use the engine, refused to accept it or pay for it. In an action for the price, it insisted that the contract was executory, and that if the engine failed to fulfill the guaranties, it was not liable for the purchase price. *Held* that, while that might have been true at the time the pleadings were filed, the summons called upon the purchaser to decide whether it would reject the engine and demand its removal, or accept it and rely upon a recovery of damages for any breach of the contract, and its election to keep and use the engine caused title to pass to it, and from that time the guaranties ceased to be conditions precedent and became collateral agreements, for the breach of which the purchaser was confined to a recoupment of damages, as its conduct in continuing to use the engine was conclusive evidence that the engine was a substantial performance of the contract.

[Ed. Note.—For other cases, see Sales, Cent. Dig. §§ 313–317; Dec. Dig. ⟹126.]

3. APPEAL AND ERROR ⟹999—REVIEW—QUESTIONS OF FACT.

The jury's refusal to allow the purchaser any damages by way of recoupment or on its counterclaims for expenses in testing the engine and for loss of profits through the engine's failure to furnish sufficient power was conclusive, so far as the Circuit Court of Appeals was concerned, that the seller substantially performed its contract.

[Ed. Note.—For other cases, see Appeal and Error, Cent. Dig. §§ 3912–3921, 3923, 3924; Dec. Dig. ⟹999.]

4. SALES ⟹340—ACTIONS FOR PRICE—FORM.

Where, notwithstanding alleged breaches of guaranties of an engine which the contract of sale made conditions precedent to any liability for the price, the buyer elected to keep and use it, the seller could sue on the contract of sale, and was not required to proceed upon a quantum meruit.

[Ed. Note.—For other cases, see Sales, Cent. Dig. §§ 927–942; Dec. Dig. ⟹340.]

5. SALES ⟹439—ACTIONS—BREACH OF WARRANTY—BURDEN OF PROOF.

Where, in an action for the purchase price of an engine, though defendant failed to claim a recoupment of damages for breaches of guaranties by an affirmative defense, the court told the jury to reduce the recovery if they found the engine failed to fulfill the guaranties, it properly charged that the burden of proof rested on defendant to show that the engine failed to fulfill such guaranties.

[Ed. Note.—For other cases, see Sales, Cent. Dig. §§ 1258–1260; Dec. Dig. ⟹439.]

6. SALES ⟹437—ACTIONS—PLEADING—ISSUES.

In an action for the purchase price of an engine, the answer denied performance of the contract of sale by plaintiff, and alleged specifically the particulars wherein the engine failed to comply with the conditions and guaranties specified in the contract, but did not make the breach of the guaranties the basis of any claim for damages. *Held*, that the court might properly have entirely disregarded the defense of recoupment in its instructions.

[Ed. Note.—For other cases, see Sales, Cent. Dig. §§ 1248–1257; Dec. Dig. ⟹437.]

7. APPEAL AND ERROR ⟹977—REVIEW—DENIAL OF NEW TRIAL.
The action of the trial court in refusing a new trial cannot be reviewed by the Circuit Court of Appeals.
[Ed. Note.—For other cases, see Appeal and Error, Cent. Dig. §§ 3860–3865; Dec. Dig. ⟹977.]

8. TRIAL ⟹349—SPECIAL ISSUES—DISCRETION AS TO SUBMISSION.
The refusal of the trial court to submit to the jury a long list of questions, as requested, was a matter within its discretion.
[Ed. Note.—For other cases, see Trial, Cent. Dig. §§ 823–827; Dec. Dig. ⟹349.]

9. SALES ⟹440—WARRANTIES—BREACH—EVIDENCE.
In an action for the purchase price of a gas engine, indicator cards taken from the engine by a standard appliance, designed to show its indicated horse power, were admissible to show that the engine fulfilled the guaranties as to its horse power; their probative force being a question for the jury.
[Ed. Note.—For other cases, see Sales, Cent. Dig. §§ 1261–1276; Dec. Dig. ⟹440.]

In Error to the District Court of the United States for the District of Minnesota; Page Morris, Judge.

Action by the H. N. Strait Manufacturing Company against the Crescent Milling Company. Judgment for plaintiff, and defendant brings error. Affirmed.

Harris Richardson, of St. Paul, Minn. (Walter Richardson, of St. Paul, Minn., on the brief), for plaintiff in error.

J. O. P. Wheelwright, of Minneapolis, Minn. (Albert C. Cobb and John I. Dille, both of Minneapolis, Minn., on the brief), for defendant in error.

Before HOOK and CARLAND, Circuit Judges, and AMIDON, District Judge.

AMIDON, District Judge. The Strait Manufacturing Company was plaintiff below. It brought this action against the Crescent Milling Company to recover the purchase price of an engine. The contract was in writing, and took the form of a proposal from the Manufacturing Company, and an acceptance by the Milling Company. It binds the plaintiff to supply and install in the defendant's mill at Fairfax, Minn., a 300 indicated horse power horizontal tandem double acting gas engine, which engine is to operate the flouring mill of the purchaser, and the lighting plant of the village, and, at 150 revolutions per minute, carry a load of 200 brake horse power, and a peak load of 264 horse power. The contract also contains numerous guaranties as to the amount of power which the engine will develop by the use of specified British thermal units of heat. While these qualities are sometimes spoken of as guaranties in the contract, they are by its express provision made conditions precedent to any liability on the part of the purchaser to accept or pay for the engine. We quote from the contract the following language:

"In case said engine does not fulfill said test or satisfy said guaranties, said purchaser shall not be required to pay therefor, and said engine shall be forthwith removed by said corporation upon demand."

The contract provides for a 60-day endurance test by means of which the engine should be shown to possess the qualities specified in the contract. The engine was installed, and its use in defendant's mill commenced on the 8th day of March, 1912. For various causes, partly due to the engine, and partly due to the fact that defendant found it necessary to put in new transmission machinery in its milling plant, the 60-day test was not commenced until July 25th. The engine, however, was run a large part of the time between its installation and that date. The endurance test extended from July 25th to September 23d. The result left the question whether the engine fulfilled the guaranties of the contract in controversy. Considerable trouble was experienced during the period. Plaintiff insisted that this was due to the quality of the gas furnished by defendant. Defendant insisted that it was due to defects in the engine. Plaintiff requested defendant to accept the engine and make the first payment at the conclusion of this test, in accordance with the terms of the contract. This defendant refused to do. The parties separated with the understanding that defendant should go on using the engine, and that plaintiff should supply some minor parts, which it was hoped would remedy the defects complained of by defendant. The correspondence continued for some three months—plaintiff urging an acceptance of the engine and a settlement; defendant continuing to use the engine, but refusing to accept or pay for it.

[1] The complaint is based upon the contract, which is set forth in full as an exhibit. It alleges that the engine was supplied by the plaintiff, installed, and tested, and that it fulfilled all the conditions of the contract. It contained no allegation on the subject of acceptance of the engine by defendant, or of a waiver of any of the conditions specified in the contract. The answer denies performance of the contract by plaintiff, and alleges specifically the particulars wherein the engine failed to comply with the conditions and guaranties specified in the contract. No issue is raised on these guaranties by the answer, save only a failure of the plaintiff to perform its contract. The breach of the guaranties is not made the basis of any claim of damages upon the ground that the engine furnished is less valuable than the one contracted for. The answer, however, does set up by way of counterclaim two grounds of recovery: First, expenses incurred by the defendant in testing the engine; second, loss of profits in defendant's milling and electric lighting operations by reason of the failure of the engine to furnish necessary power. On the 31st of March, 1913, counsel for plaintiff served upon defendant notice that at the trial of the action it would apply to the court for an order permitting an amendment of the complaint, adding the following allegation:

"That at all times since the completion of said endurance test, the defendant has continuously retained and used said engine."

So far as we can discover from the record this motion was never brought to the notice of the court, or any order made permitting the amendment. Evidence, however, was received at the trial, without objection, showing that defendant had continuously used the engine in its mill, without any notice other than the answer, of its dissatisfac-

tion, or any demand upon plaintiff to remove the same from defendant's premises. The trial commenced April 21, 1913. On the 7th day of May, while the trial was still progressing, defendant notified the plaintiff in writing to remove the engine from its plant. The trial court dealt with the case as if the complaint had been actually amended in accordance with the notice, and we think we must treat it in the same way. The trial resulted in a judgment in favor of plaintiff for the full purchase price. Defendant brings error.

[2-4] The trial court submitted to the jury the question as to whether defendant had, by its continued use of the engine, accepted it, and instructed the jury that if they found such acceptance they should then return a verdict in favor of plaintiff, less any reduction in the value of the engine due to its failure to fulfill the guaranties, and also less any damages allowed in respect of the counterclaims. Defendant insisted throughout the trial that the contract was still executory, that no title to the engine had passed, and that defendant could not be held liable for any part of the purchase price if the engine failed to fulfill any of the guaranties. It made numerous requests that the case be submitted to the jury upon this theory, and took numerous exceptions challenging the charge of the court submitting the case to the jury in the manner above explained. All the important assignments of error rest upon this theory of the defense. If the theory is wrong, the assignments of error fail. We think the theory is wrong. At the time the original pleadings were drawn, it is possible that defendant might have stood upon such a theory. But when the summons was served it was a call to defendant, not only to answer the complaint, but to decide what it would do with respect to the engine—whether it would reject it and demand its removal from its premises, or accept it, continue to use it, and rely upon a recovery of damages for any breach of the contract. It could not take both positions. It decided to keep the engine and use it. That election caused the title to pass to defendant. From that time forward the provisions of the contract ceased to be conditions precedent, and became collateral agreements. When the action was brought, defendant had already had a long experience with the engine. It had been in operation in its plant for nearly nine months. It had been subjected to an endurance test. As the result of that experience, defendant knew its qualities. There was no evidence at the trial tending to show that anything of importance in regard to the engine was discovered after the action was brought. So when defendant continued to use it during the months that the action was pending, its conduct affords conclusive evidence that the engine was a "substantial performance" of the contract within the meaning of that term as used by this court in City of St. Charles v. Stookey, 154 Fed. 772, 85 C. C. A. 494, and the long list of earlier cases there referred to. See particularly German Savings Institution v. De La Vergne Refrigerating Mach. Co., 70 Fed. 146, 17 C. C. A. 34; Springfield Milling Co. v. Barnard Leas Manufacturing Co., 81 Fed. 261, 26 C. C. A. 389; Dodsworth et al. v. Hercules Iron Works, 66 Fed. 483, 13 C. C. A. 552.

This inference from defendant's conduct is in accord with the weight of evidence as to the actual working of the engine. The refusal of the jury to allow defendant any damages either by way of recoupment or on its counterclaims, all of which involved the question whether the engine fulfilled the guaranties, establishes, so far as this court is concerned, that plaintiff substantially performed its contract. For the reasons clearly set forth in the decisions referred to, defendant could no longer treat the terms of the contract as conditions precedent to a recovery of the purchase price. It was confined to a recoupment of damages for any failure of the engine to completely fulfill the guaranties upon which it was sold. Such being the case, the charge of the court was more favorable to defendant than it was entitled to, for the reason that the answer did not contain any affirmative defense asking for damages upon the ground that the engine furnished was of less value than the engine agreed to be furnished. The charge of the court, however, permitted the jury to reduce the recovery in case they found that the engine sold was less valuable than it should have been under the contract. Under our decision in City of St. Charles v. Stookey, 154 Fed. 772, 85 C. C. A. 494, it was not necessary for the complaint to proceed upon quantum meruit, or contain a count of that character. It was properly based upon the contract.

[5, 6] Defendant assigns error because the court charged the jury that the burden of proof was upon defendant to show that the engine failed to fulfill the guaranties. The charge was right. Under the case made by the evidence, it was the duty of the defendant to claim its recoupment of damages by an affirmative defense, and the burden rested upon it to establish such defense. The court directed the jury to reduce the recovery in case they found that the engine sold did not fulfill the contract. It did this, although the answer failed to assert such a defense. In permitting the defense, however, the court very properly placed the burden of proof where it would have rested if the defense had been set up in the answer. The court might properly have disallowed this defense entirely, as was done under a similar answer in Dodsworth et al. v. Hercules Iron Works, 66 Fed. 483, 13 C. C. A. 552. In allowing the jury to consider that subject, the charge was more favorable to the defendant than it was entitled to.

[7] We are asked to review the action of the trial court in refusing a new trial. We have so frequently explained that that cannot be done that we can only express surprise that able and experienced counsel continue to make the request.

[8] Counsel for defendant asked the trial court to submit a long list of questions to the jury, and assigns error on the refusal. This was clearly a matter of discretion, W. B. Grimes Drygoods Company v. Malcolm, 164 U. S. 483, 17 Sup. Ct. 158, 41 L. Ed. 524, and the discretion was not abused.

[9] The plaintiff sought to prove that the engine fulfilled the guaranties by the use of indicator cards taken from the engine by a standard appliance designed to show its indicated horse power. It was seriously urged by defendant that these cards were not competent evi-

dence, and had no probative force. We think they were properly received, and that their probative force was a question for the jury.

There are 121 assignments of error. We have examined them all, and are of the opinion that none of them are more meritorious than the ones to which we have already referred.

The judgment is affirmed.

PATTON v. PUBLIC SERVICE RY. CO.

(Circuit Court of Appeals, Third Circuit. December 2, 1915.)

No. 1982.

1. DEATH ⟹103—ACTIONS—SUFFICIENCY OF EVIDENCE.

In an action for the death of a person whose body was found under the rear truck of a backing railroad car at a point near a station from which a well-worn path led along the right of way to a street, evidence *held* insufficient to make a question for the jury, in that it did not show how the accident happened, that the company was negligent, or that its negligence was the proximate cause of the death.

[Ed. Note.—For other cases, see Death, Cent. Dig. § 141; Dec. Dig. ⟹103.]

2. DEATH ⟹58—ACTIONS—EVIDENCE.

The maxim of res ipsa loquitur did not apply, as that maxim applies where the accident is such as necessarily to involve negligence, and does not relate to a situation susceptible of proof, but not capable of proof merely because of the absence of witnesses.

[Ed. Note.—For other cases, see Death, Cent. Dig. §§ 75–78; Dec. Dig. ⟹58.]

In Error to the District Court of the United States for the District of New Jersey; Thomas G. Haight, Judge.

Action by Helen Elizabeth Patton, as administratrix of Frank A. Patton, deceased, against the Public Service Railway Company. Judgment for defendant, and plaintiff brings error. Affirmed.

Samuel E. Darby, of New York City, for plaintiff in error.

Lefferts S. Hoffman, of Newark, N. J., for defendant in error.

Before BUFFINGTON, McPHERSON, and WOOLLEY, Circuit Judges.

WOOLLEY, Circuit Judge. This action was brought by the plaintiff to recover damages for the death of her husband, alleged to have been caused by the negligence of the defendant railway company. For want of proof of the negligence alleged, the court directed a judgment of nonsuit. The case is before us on writ of error. Of the errors assigned, the principal one is, that the court erred "in failing to submit the case to the jury to find the facts as to whether or not, from the evidence, or from reasonable inferences most favorable to the plaintiff to be drawn therefrom, negligence of defendant had been established."

[1] Palisade Junction is a station of the street railway system operated by the defendant corporation, at which two lines of double tracks

---

⟹For other cases see same topic & KEY-NUMBER in all Key-Numbered Digests & Indexes

intersect, one line extending north and south and the other east and west. The waiting room of the station is south of the point of intersection. The platform in front of the waiting room serves the southbound track of the first-named line. From this platform to the platform serving the northbound track on the opposite side, the space is planked and is the way provided for passengers to pass from one side to the other to board cars going north or south. South of the wooden platform serving the northbound track and in part divided from it by an iron fence, is a level earthen space used for embarking and disembarking passengers in northbound traffic. From this space leads a well worn path along the defendant's right of way, used by passengers to shorten the distance in going to and from Marion Avenue and the station. Except where the tracks are planked, the girder rails are exposed in the ordinary manner of steam railroad tracks.

The plaintiff's husband was found dead under the rear truck of a car on the northbound track. The car had backed from a position north of the station toward a switch south of the station. The body was found at a point forty-three feet from the southernmost edge of the planking connecting the two platforms. The head lay in the direction of the front of the car. Wounds upon the body and the disarrangement of clothing suggested that the body had been dragged or pushed, but did not indicate the distance. The night was cold and the tracks were filled with snow and ice to the level of the rails.

A few minutes before the accident, a man stopped at the news stand in the station waiting room and inquired the distance to Marion Avenue. Being informed and having purchased a small bag of candy, he left. A moment later, the conductor of a car standing upon the northbound track gave the signal by bell to move the car back to the switch. The conductor remained upon the rear platform, and according to the testimony, was able to see a certain distance down the track, but saw no one. The car was lighted within and carried the customary forward and rear lights. The conductor felt a jolt, ordered the car stopped, and discovered the body of the plaintiff's husband beneath it. Impact with the body had thrown the truck off the track. In the decedent's pocket was found a small bag of candy. This is the only evidence tending to identify the man as the one who had made the inquiry at the station. There was also found in his pocket a letter written by his wife, requesting him to visit her, and indicating how he could reach her. He was instructed by the letter to take the line of the defendant running east and west, to alight at Palisade Junction, and thereafter to "walk along the track two blocks" to Marion Avenue.

The specific negligence charged to the defendant is, that its servants backed the car at a reckless speed, without giving sufficient warning, and failed to exercise the care which the law requires of a carrier toward a passenger.

The only evidence as to whether the decedent had been a passenger of the defendant railway company was his presence at the station, indicated by the purchase of a bag of candy at the station by a man (not identified to be the decedent) and by the bag of candy found in the

pocket of the decedent, and the evidence which related to the letter found upon him directing him over the defendant's line to that station. Assuming for the purpose of argument, as did the trial court, that this evidence is sufficient to prove that the plaintiff's husband was at one time a passenger, the next question is whether he was a passenger at the time he met his death upon the tracks and away from those parts of the defendant's premises reserved and provided for passengers. Dismissing this question, as likewise did the trial court, and with it all questions of law relating to the duty and the measure of care required of a carrier toward trespassers and licensees, we will direct our inquiry to the defendant's acts of negligence specifically charged by the plaintiff as the cause of her husband's death.

No one saw the accident and no one knows, as a matter of fact, how it happened. The plaintiff contends that from the circumstances of the accident, negligence of the defendant must be inferred, that is, had the defendant not been negligent, the accident would not have occurred. When or how the plaintiff's husband got upon the track between the two rails is not disclosed. Whether he heard the bell ordering the car to back or whether he saw the lighted car in time to avoid his peril, is not shown. Whether the car knocked him down, or whether he fell down and while in the forward position in which his body was found, was run over by the car, is a mystery. Whether the conductor upon the rear platform of the car could have seen the decedent or by the exercise of care should have seen him, is not proved, nor is it proven that in backing the car, under the circumstances, the conductor was engaged otherwise than in directing the car's movements and in the proper exercise of care for the safety of those upon the track. In fact it is not shown how the accident occurred. While it is certain that the plaintiff's husband was killed by the car, there is no evidence that his death was caused by negligence, or that the proximate cause of his death was the negligence of the defendant. The learned trial judge was entirely without error in withdrawing from the jury a case in which a verdict for the plaintiff could not have been sustained by the evidence.

The several rulings on the admission and rejection of testimony assigned as error were so manifestly proper, that we do not feel called upon to discuss them, especially in view of our conclusion that if they had been otherwise, the testimony admitted or rejected could not have supplied the deficiency of testimony as to the defendant's negligence, and therefore could not have affected the consideration upon which the case was withdrawn from the jury.

From the testimony may be gathered the atmosphere of the trial and may be found the policy upon which the trial was conducted. A very careful reading of the whole testimony discloses that in order that justice might be done with respect to facts which from their nature were obscure, the learned trial judge very liberally and properly resolved in favor of the plaintiff all controverted questions of evidence that may be said to have contained doubt and were seriously debatable.

There was controversy both in the testimony and argument as to the measure of duty which devolved upon the defendant toward the

decedent as a passenger, licensee or trespasser, but as this testimony was introduced and this discussion was predicated upon the assumption that there was proof of negligence of the defendant in some degree, it ceased to have a bearing upon the case in the absence of proof of negligence of the defendant in any degree.

[2] Recognizing the lack of testimony upon the element of negligence, the plaintiff urged that the case is one in which the maxim of res ipsa loquitur applies. This maxim does not relate to a situation susceptible of proof yet not capable of proof merely because of the absence of witnesses. It applies where the accident itself bespeaks negligence, that is, where the accident is such as necessarily to involve negligence, and for that reason further proof of negligence is not required. The circumstances connected with the death of the plaintiff's husband, in so far as they are disclosed, do not show that it was necessarily occasioned by the negligence of the defendant. It may have been occasioned by negligence of his own, or may have been the result of pure accident, in which no negligence was present. In this state of the evidence, it is clear that there was nothing from which the jury could properly have found that the death of the plaintiff's husband was due proximately to the negligence of the defendant. We are therefore of opinion that the plaintiff failed to show a cause of action, and that the trial court committed no error in withdrawing the case from the jury and directing a judgment of nonsuit. The judgment below is affirmed.

McPHERSON, Circuit Judge, took no part in the consideration and decision of this case.

SCOTTISH UNION & NATIONAL INS. CO. v. McKONE.

(Circuit Court of Appeals, Eighth Circuit. November 15, 1915.)

No. 4371.

1. INSURANCE ⟹165—FIRE POLICIES—MISTAKE IN DESCRIPTION.

Where a fire policy, which described the insured property as located on the southwest quarter of section 22, declared that insured's title to the land was under a homestead claim against the government, to be perfected, the true location of the homestead, which was located on the northwest quarter of such section, may, in an action on the policy, be shown to correct the description.

[Ed. Note.—For other cases, see Insurance, Cent. Dig. § 351; Dec. Dig. ⟹165.]

2. INSURANCE ⟹561—FIRE POLICIES—ACTIONS—PROOFS OF LOSS—WAIVER.

Where the insurer received and retained proofs of loss, sent nearly a month after the fire, and dispatched an adjuster, who examined the insured under oath, the provision of the policy requiring insured to give immediate notice of loss was waived.

[Ed. Note.—For other cases, see Insurance, Cent. Dig. §§ 1406, 1407, 1409; Dec. Dig. ⟹561.]

3. INSURANCE ⟹668—FIRE POLICIES—ACTIONS—JURY QUESTION.

The question whether insured misrepresented the value of the property, and thus avoided the policy, under a clause declaring that concealment or

---

⟹For other cases see same topic & KEY-NUMBER in all Key-Numbered Digests & Indexes

misrepresentation should invalidate it, *held*, under the evidence, for the jury.

[Ed. Note.—For other cases, see Insurance, Cent. Dig. §§ 1556, 1732–1770; Dec. Dig. ⚷668.]

4. EVIDENCE ⚷318—TRIAL ⚷48—HEARSAY—ADMISSIBILITY.

Property located on a homestead claim was insured against fire. Proofs of homestead, consisting of affidavits, one by insured and two by others, which set up the destruction of the property before the policy was issued, were offered in an action on the fire policy. *Held*, that such affidavits were inadmissible; all having been offered together, and insured not having been shown to have been present when the affidavits of the other affiants were made.

[Ed. Note.—For other cases, see Evidence, Cent. Dig. §§ 1193–1200; Dec. Dig. ⚷318; Trial, Cent. Dig. § 120; Dec. Dig. ⚷48.]

5. INSURANCE ⚷668—FIRE POLICIES—ACTIONS—JURY QUESTION.

As the credibility of witnesses is for the jury, the question whether the property was destroyed before the policy was issued is for the jury, where there was testimony of admissions by insured to that effect, though he contradicted it, and another witness testified the fire occurred after the policy was written.

[Ed. Note.—For other cases, see Insurance, Cent. Dig. §§ 1556, 1732–1770; Dec. Dig. ⚷668.]

6. EVIDENCE ⚷359—PHOTOGRAPH—PREMISES INSURED.

A photograph of the burned house, not objected to by insured, who merely claimed it did not correctly show the fireplace, is admissible, as throwing light on the value of the premises, which the insurer contended was misrepresented.

[Ed. Note.—For other cases, see Evidence, Cent. Dig. §§ 1509–1512; Dec. Dig. ⚷359.]

In Error to the District Court of the United States for the District of Wyoming; John A. Riner, Judge.

Action by Sylvester M. McKone against the Scottish Union & National Insurance Company. There was a judgment for plaintiff, and defendant brings error. Reversed and remanded.

William A. Riner and Timothy F. Burke, both of Cheyenne, Wyo., for plaintiff in error.

M. C. Brown, of Laramie, Wyo., for defendant in error.

Before CARLAND, Circuit Judge, and AMIDON and VAN VALKENBURGH, District Judges.

CARLAND, Circuit Judge. This is an action brought by the defendant in error, hereinafter called the plaintiff, to recover of the plaintiff in error, hereinafter called the defendant, the value of a house and furniture contained therein, which it is claimed were destroyed by fire September 3, 1913, while covered by a policy of insurance made and delivered by defendant to plaintiff August 23, 1913. The plaintiff recovered a verdict, and the defendant brings the case here on error.

There was a general demurrer filed to the complaint in the court below, and the record shows that it was sustained. It does not appear, however, in what respect the complaint was claimed to be faulty. The complaint was not amended, so far as the record shows,

and both parties went to trial without objection upon the complaint as it now appears. The point is made now in this court that the complaint does not state facts sufficient to constitute a cause of action, in this: That it does not appear from the complaint that the furniture alleged to have been destroyed by fire was in the house at the time it was so destroyed. We think this objection is highly technical, and probably, if well taken, was aided by the verdict; but, as the case must be tried again, we pass the question, as the plaintiff will have ample opportunity to amend, if he is so advised.

[1] The policy of insurance insured the property described therein while located on the southwest quarter of section 22, township 18 north, range 72 west, about 20 miles northwest of Laramie, Wyo. Upon the trial the testimony showed that the property was located on the northwest quarter of the northwest quarter of said section, township, and range. The trial court allowed testimony to be introduced, over the objection of counsel for defendant, that the description of the land upon which the dwelling house was located as contained in the policy was a mistake, and that the insured gave to the agent of the company, who made out the application for the policy, the correct description. We do not think there was prejudicial error in this ruling of the court. The insurance policy contained the following clause:

"The assured's title to land, on which the insured property is located, is under homestead claim against U. S. government, title to be perfected within five years."

It thus appears that both parties knew that the insured property was upon the homestead claim, and the proof allowed to be introduced, as above stated, simply gave a correct description of that claim.

[2] The policy of insurance provided:

"If fire occur the insured shall give immediate notice of any loss thereby in writing to this company. * * * No suit or action on this policy, for the recovery of any claim, shall be sustainable in any court of law or equity until after full compliance by the insured with all the foregoing requirements."

Assuming that the fire which destroyed the property occurred on September 3, 1913, the plaintiff did not give the insurance company immediate notice of the loss, except as the proofs of loss required by the policy, which were forwarded to the defendant on September 29, 1913, may be considered such notice. The trial court held that these proofs of loss constituted such notice, and that such notice, given on September 29, 1913, would be an immediate notice under the terms of the policy. Whether this was the correct view to take of the matter we need not determine.

The proofs of loss were received by the insurance company and retained, and on September 27, 1913, one James Hopkins, an adjuster, acting for the defendant, was sent to the plaintiff, and examined him before a notary public touching the loss sustained by the fire. We think that the receiving of the proofs of loss without objection by the company, and the sending of an adjuster to the insured to examine him in connection with the loss, without any objection being made

as to the immediate written notice, constituted a waiver of the requirement of the policy in this respect.

[3] We now come to matters which are more serious. The policy contained this clause:

"This entire policy shall be void if the insured has concealed or misrepresented, in writing or otherwise, any material fact or circumstances concerning this insurance or the subject thereof."

It was pleaded in the answer of the insurance company that plaintiff's representation as to the cost of the building, made by the insured to the agent of the insurance company at the time the policy was issued, was untrue to the knowledge of the plaintiff, and that the building did not cost to exceed $2,300. The plaintiff testified in regard to this matter at the trial as follows:

"Q. Did Mr. E. A. McClure, the agent who issued this policy, ask you at the time you applied for the insurance what the cost of the building was? A. Yes. Q. What amount did you state to him? A. I told him between $3,200 and $3,300, if I remember rightly. Q. Did Mr. E. A. McClure, the agent of this company at the time you applied for this insurance, state to you that the company would not accept insurance for an amount in excess of three-fourths of the cost of the building? A. No, sir; he didn't. He stated to me that they wouldn't insure the building for over three-fourths of the actual value, or what it cost me. Q. Did Mr. E. A. McClure, the agent from whom you secured this policy, state to you at the time it was applied for that the company would not insure the contents of the building for more than three-fourths of the actual value? A. I think not. The same question applied to both the house and furniture. Q. Mr. McClure then stated to you that the company wouldn't insure the property, for which you applied for insurance, both building and contents, for more than three-fourths of the actual cash value? A. I don't think that is the way he stated it at all. Q. How do you recall he asked you this question? A. He didn't ask me a question. He made the statement: 'I suppose you understand an insurance company does not insure for more than three-fourths of the actual cash value.' I think that is the way it was put to me. I suppose by the actual cash value he meant what money was paid out and what the building really cost me, and I applied for insurance under that understanding. Q. Mr. McClure then stated to you that the company wouldn't insure the property to exceed three-fourths of its actual cash value? A. Of what the building cost."

The policy carried $2,500 on the building. C. H. Johnson, a witness produced by defendant, testified that he was the carpenter who built the dwelling house in question for the W. H. Holliday Company, and that the cost of the building was about $1,800, outside of the hauling and board. A. T. Foster, also a witness on behalf of the insurance company, testified that he was in the employ of the W. H. Holliday Company and was familiar with the material which went into the construction of the dwelling house that defendant insured. His testimony was to the effect that the cost of the building was about $1,850, including hauling. He also testified that the hauling of material for a house of this particular size would cost about $165. On this state of the record counsel for the insurance company requested the court to charge the jury as follows:

"You are instructed that if the plaintiff, Sylvester M. McKone, knowingly made to the agent of the defendant company a false and fraudulent statement of the actual cost of the property to be insured, in order to procure the insurance, then you are instructed that the plaintiff cannot recover in this action."

This request was refused, and an exception taken. The trial court of its own motion took every question of fact but that of damages from the jury, which action of the court was excepted to by counsel for the defendant. The trial court may have decided the question of fact correctly, but we are of the opinion that the defendant was entitled to have the question of overinsurance submitted to the jury; and it was clear error for the court to refuse to do so.

[4] The defendant also by its answer alleged that the property mentioned in the policy was never destroyed by fire during the life of the policy, or at all. The plaintiff testified that the house and its contents were destroyed September 3, 1913; and a witness by the name of Lueck, who was employed by plaintiff at the time the house burned, testified that the fire occurred the last of August or the first of September, not naming the year.

At the trial counsel for the insurance company offered in evidence certain homestead proofs made by the plaintiff on March 6, 1914. These proofs consisted of the affidavit of the plaintiff and two other witnesses, John Childress and William H. Bridger. These proofs were offered for the purpose of showing that it appeared therefrom that plaintiff and his witnesses, in making said proof, testified that the dwelling house located on the homestead was destroyed by fire on March 13, 1913, long before the policy sued upon was issued. The offer of this evidence was excluded by the court, and an exception taken by counsel for the insurance company. We think there was no error in this ruling, as it did not appear that the plaintiff was present when Childress and Bridger gave their proofs, or that he knew what they had testified to, and the three affidavits were offered together. The plaintiff's affidavit, no doubt, would have been admissible, if offered alone.

[5] However, John H. Symons, the United States commissioner who took the proof, testified without objection that, at the time he took the final homestead proof of the plaintiff, plaintiff swore that the house upon the homestead was destroyed by fire March 13, 1913. The plaintiff, at the time the homestead proofs were offered, and when counsel for the insurance company stated what they showed in regard to the date of the fire, said, if the proofs showed that fact, it was a mistake. The court charged the jury with reference to the date of the fire as follows:

> "The petition alleges, and I think the proof clearly shows, that the building insured and its contents were destroyed by fire on the 3d day of September, 1913."

While the homestead proofs were excluded, the testimony of Symons that the plaintiff had stated under oath that the fire occurred March 13, 1913, remained. We think the credibility of the witness upon this proposition was a question for the jury to determine, and that it was error for the court to decide the question, and thereby prevent the jury from passing upon it.

[6] At the trial counsel for the defendant offered in evidence a photograph of the house alleged to have been destroyed by fire. There was no objection to it by counsel for plaintiff. The plaintiff

testified that the fireplace was on the wrong side, but it certainly was the house. The photograph was excluded by the court as being no evidence of value, to which ruling an exception was taken. The photograph appears in the record, and we cannot come to any other conclusion but that it might have aided the jury materially in arriving at the value of the house.

For the errors specified, the judgment below must be reversed, and a new trial ordered.

ESTES v. UNITED STATES.

(Circuit Court of Appeals, Eighth Circuit. November 15, 1915.)

No. 4451.

1. CUSTOMS DUTIES ⟹125—CONCEALMENT OF PROPERTY IMPORTED CONTRARY TO LAW.

Rev. St. § 3082 (Comp. St. 1913, § 5785), provides that if any person shall knowingly import any merchandise contrary to law, or conceal or facilitate the transportation or concealment of any such merchandise, he shall be punished as therein provided. Section 3100 (section 5812) provides that all merchandise imported into the United States from any contiguous foreign country shall be unladen and inspected by a customs officer at the first port of entry where it shall arrive. *Held*, that cattle brought into the United States from Mexico without complying with section 3100 were imported contrary to law, within section 3082, though the cattle were not dutiable.

[Ed. Note.—For other cases, see Customs Duties, Cent. Dig. § 266; Dec. Dig. ⟹125.]

2. ANIMALS ⟹29—QUARANTINE REGULATIONS.

Act Feb. 2, 1903, c. 349, § 2, 32 Stat. 792 (Comp. St. 1913, § 8699), provides that the Secretary of Agriculture shall have authority to make proper regulations to prevent the introduction of contagious or communicable diseases of animals from a foreign country into the United States, and section 3 (section 8700) provides that any person violating that act or the regulations in pursuance thereof shall be guilty of a misdemeanor. Act Aug. 30, 1890, c. 839, 26 Stat. 416, provides that the Secretary of Agriculture may place in quarantine all neat cattle, etc., imported into the United States at such ports as he may designate for such purpose, and that the importation of all animals described in that act into any port except those designated by him as quarantine stations is thereby prohibited. The Secretary of Agriculture promulgated certain regulations requiring cattle subject to quarantine and inspection to be entered through certain customs stations, and requiring animals subject to inspection, including all cattle imported from Mexico, to be inspected at the port of entry. *Held*, that the statute gave the Secretary of Agriculture full authority to make such regulations.

[Ed. Note.—For other cases, see Animals, Cent. Dig. § 79; Dec. Dig. ⟹29.]

3. CUSTOMS DUTIES ⟹134—CONCEALMENT OF PROPERTY IMPORTED CONTRARY TO LAW.

An indictment for concealing and facilitating the transportation and concealment of cattle imported without inspection by an inspector of the Bureau of Animal Industry properly charged that the animals were imported "contrary to law," without such inspection, so as to bring the charge within the language of Rev. St. § 3082 (Comp. St. 1913, § 5785).

[Ed. Note.—For other cases, see Customs Duties, Cent. Dig. §§ 336–339; Dec. Dig. ⟹134.]

In Error to the District Court of the United States for the District of New Mexico; W. H. Pope, Judge.

Phillip Estes was convicted of an offense, and he brings error. Affirmed.

Edward A. Mann, of Albuquerque, N. M. (R. F. Hamilton, of Deming, N. M., on the brief), for plaintiff in error.

Summers Burkhart, U. S. Atty., of Albuquerque, N. M.

Before CARLAND, Circuit Judge, and AMIDON and VAN VALKENBURGH, District Judges.

CARLAND, Circuit Judge. Estes was jointly indicted, tried, and convicted with one Faustino Holguin for the violation of section 3082, R. S. U. S. (Comp. St. 1913, § 5785), which reads as follows:

"If any person shall fraudulently or knowingly import or bring into the United States, or assist in so doing, any merchandise, contrary to law, *or shall receive, conceal, buy, sell, or in any manner facilitate the transportation, concealment, or sale of such merchandise after importation, knowing the same to have been imported contrary to law, such* merchandise shall be forfeited and the offender shall be fined in any sum not exceeding five thousand dollars nor less than fifty dollars, or be imprisoned for any time not exceeding two years, or both. Whenever, on trial for a violation of this section, the defendant is shown to have or to have had possession of such goods, such possession shall be deemed evidence sufficient to authorize conviction, unless the defendant shall explain the possession to the satisfaction of the jury."

Having been sentenced to the penitentiary, he brings the case here, assigning error.

The indictment charged in substance that the defendants on the 29th day of March, 1914, at the county of Luna, and district of New Mexico, did receive and conceal and did facilitate the transportation and concealment of certain cattle, which were described, and which had theretofore been fraudulently and clandestinely imported and brought into the United States from the republic of Mexico contrary to law; that is to say, without the same being invoiced or entry thereof being made with any collector of customs of the United States, and without declaration thereof being made to any proper revenue officer of the United States, and without the same having been inspected by an inspector of the Bureau of Animal Industry of the United States, knowing the same to have been so imported and brought into the United States from the republic of Mexico. After a witness had been sworn for the prosecution and a question asked, counsel for the defendant objected to the introduction of any further evidence on the ground that the indictment failed to state any crime or offense punishable by the laws of the United States. Such a motion is unknown to the procedure in criminal cases in the courts of the United States. In United States v. Gooding, 12 Wheat. 461, 6 L. Ed. 693, Justice Story, in delivering the opinion of the Supreme Court, said:

"Undoubtedly, according to the regular course of practice, objections to the form and sufficiency of an indictment ought to be discussed, upon a motion to quash the indictment, which may be granted or refused in the discretion of the court, or upon demurrer to the indictment, or upon a motion in arrest of judgment, which are matters of right. The defendant has no right

to insist that such objections should be discussed or decided, during the trial of the facts by the jury. It would be very inconvenient and embarrassing, to allow a discussion of such topics, during the progress of the cause before the jury, and introduce much confusion into the administration of public justice. But, we think, it is not wholly incompetent for the court to entertain such questions, during the trial, in the exercise of a sound discretion. It should, however, be rarely done, and only under circumstances of an extraordinary nature."

The trial court in its discretion, however, entertained the motion and denied it. This ruling is assigned as error. As the question as to whether the indictment sustains the judgment might probably be raised here for the first time, we will consider the error assigned.

[1] It is contended that as the cattle were not dutiable, and they were not, it was not necessary to enter them for import at a port of entry; but under section 3100, R. S. U. S. (Comp. St. 1913, § 5812), all articles or merchandise imported into the United States from a contiguous foreign country must be unladen in the presence of, and be inspected by, an inspector or other officer of the customs. In other words, an importer cannot determine for himself that articles which he desires to import are not dutiable and bring the same into this country at any place he shall determine. All articles, whether dutiable or not, must be properly declared and entered at the custom house and there be inspected by the proper officer. To bring property into this country from a contiguous foreign country without complying with the provisions of section 3100, R. S. U. S., is to bring it into this country contrary to law.

[2, 3] It is next claimed that there is no law within the meaning of section 3082, supra, which requires the cattle mentioned in the indictment to be inspected by an inspector of the Bureau of Animal Industry of the United States. Section 2 of the act of Congress approved February 2, 1903 (32 Stat. 792, c. 349 [Comp. St. 1913, § 8699]), reads as follows:

"That the Secretary of Agriculture shall have authority to make such regulations and take such measures as he may deem proper to prevent the introduction or dissemination of the contagion of any contagious, infectious, or communicable disease of animals from a foreign country into the United States * * * whenever in his judgment such action is advisable in order to guard against the introduction or spread of such contagion."

Under the authority of this section and also of the act of Congress approved August 30, 1890 (26 Stat. 416, c. 839), the Secretary of Agriculture has promulgated certain regulations as follows:

"Ports of Import and Quarantine and Inspection Stations.

"Regulation 1. With the approval of the Secretary of the Treasury, the following named ports, subports, and custom stations are hereby designated as quarantine stations, and all horses, cattle, sheep, and other ruminants, and swine imported into the United States and which are subject to both quarantine and inspection must be entered through said stations, viz.: * * * Along the boundary line between the United States and Mexico: Campo and Calexico, Cal.; Nogales, Ariz.; El Paso, Eagle Pass, Laredo, Rio Grande City, Edinburgh, and Brownsville, Tex."

"Regulation 14. All animals imported into the United States and which are subject to inspection shall be carefully inspected by an inspector of the Bureau of Animal Industry, and all animals found to be free from disease and

not to have been exposed to any contagious disease shall be admitted into the United States, subject to the provisions for quarantine, as required by regulation 9, except as otherwise provided."

"Regulation 48. All cattle imported into the United States from the republic of Mexico must be inspected at the port of entry by an inspector of the Bureau of Animal Industry, and found free from disease."

Section 3 of the act of Congress approved February 2, 1903 (Comp. St. 1913, § 8700), above mentioned, provides as follows:

"That any person, company, or corporation knowingly violating the provisions of this act or the orders or regulations made in pursuance thereof shall be guilty of a misdemeanor, and on conviction shall be punished by a fine of not less than one hundred dollars nor more than one thousand dollars, or by imprisonment not more than one year, or by both such fine and imprisonment."

It thus appears that the Secretary of Agriculture had full authority to make the above regulations, and that these regulations required that horses, cattle, sheep, and other ruminants, and swine imported into the United States, and which are subject to both quarantine and inspection, must be entered at the ports of entry specified in regulation 1. Regulations 14 and 48 provide for the inspection by an inspector of the Bureau of Animal Industry of all such animals.

The case of United States v. Eaton, 144 U. S. 677, 12 Sup. Ct. 764, 36 L. Ed. 591, is cited in support of defendant's contention. In this case it appeared that a regulation made by the Commissioner of Internal Revenue with the approval of the Secretary of the Treasury under section 20 of the act of August 2, 1886 (24 Stat. 209, c. 840 [Comp. St. 1913, § 6232]), in relation to oleomargarine, required wholesale dealers to keep a book and make a monthly return showing certain prescribed matters, and it was decided that a wholesale dealer in the article mentioned who fails to comply with such regulation is not liable to the penalty imposed by section 18 of the act (section 6230), because he does not omit or fail to do a thing required by law in the carrying on or conducting of his business. The Supreme Court decided that, if Congress had intended that a violation of the regulations promulgated by the Commissioner of Internal Revenue should be visited by the penalty imposed by section 18 of the act, it would have said so. But in the case of United States v. Grimaud, 220 U. S. 506, 31 Sup. Ct. 480, 55 L. Ed. 563, the ruling in the case of United States v. Eaton is explained, and it is there decided that a conviction for violating the regulations established by the Secretary of Agriculture, regulating the use of forest reservations for grazing and other lawful purposes, should be sustained because the act of Congress which authorized the Secretary to establish the regulations also provided that any violation of the provisions of the act or of such rules and regulations should be punished as provided in section 5388, R. S. U. S., as amended.

The defendants in the case at bar were not indicted for violating the regulations of the Secretary of Agriculture; but as these regulations were fully authorized by law, and their violation made punishable by law (section 3, supra), it must be held, we think, that it was proper to allege in the indictment that the cattle in question had theretofore been imported and brought into the United States from the

republic of Mexico contrary to law, as specified in the indictment, so as to bring the charge within the language of section 3082, above mentioned. We therefore conclude that the court did not err in overruling the motion, which attacked the indictment.

There was a request at the close of all the testimony that the court direct a verdict for the defendants, for the reason that there was an entire failure of proof of the material allegations of the indictment. We have read the evidence in the record with care and are satisfied that there was sufficient evidence to go to the jury that the cattle were brought from the republic of Mexico into the United States without being invoiced or entry thereof made with any collector of customs, and without declaration thereof being made to any proper revenue officer, and without being inspected by an inspector of the Bureau of Animal Industry. The last clause of section 3082 provides that whenever on trial for a violation of this section the defendant is shown to have, or to have had, possession of such goods, such possession shall be deemed evidence sufficient to authorize conviction unless the defendant shall explain the possession to the satisfaction of the jury. There was evidence which positively identified Estes and his codefendant Holguin as the men who were in possession of the cattle in Luna county on March 30, 1913.

We have carefully considered the errors assigned in regard to the charge delivered by the court to the jury. The charge is not subject to the criticisms leveled against it, and we see no error therein. The court did not charge the jury that the unlawful importation of the cattle was proved by showing that the defendant had been in possession of the same. It particularly explained to the jury that, if they believed that the cattle had theretofore been unlawfully imported as charged in the indictment, then possession under the statute was sufficient to authorize conviction, unless the defendant should explain the possession to the satisfaction of the jury.

We are also of the opinion that the remarks of the United States Attorney in his address to the jury simply stated what the provisions of section 3082 were in regard to the force and effect of possession by the defendants of the cattle in question and that his comments, especially in view of the charge of the court, were not a violation of the act of March 16, 1878 (20 Stat. 30, c. 37 [Comp. St. 1913, § 1465]).

We see no error in the record, and the judgment below is therefore affirmed.

IOWA PORTLAND CEMENT CO. v. LAMANDOLA.

(Circuit Court of Appeals, Eighth Circuit. November 2, 1915.)

No. 4384.

1. MASTER AND SERVANT ⟹238—MASTER'S LIABILITY FOR INJURY TO SERVANT —CONTRIBUTORY NEGLIGENCE.

An employé is not required always and under all circumstances to adopt the less dangerous of two methods of doing his work; but the test in all cases is whether, in view of all the facts and circumstances of the case, it would be the exercise of reasonable prudence to do the work as done, even if it were perhaps a more dangerous way than one which might have been chosen.

[Ed. Note.—For other cases, see Master and Servant, Cent. Dig. §§ 681, 743–748; Dec. Dig. ⟹238.]

2. MASTER AND SERVANT ⟹235—MASTER'S LIABILITY FOR INJURY TO SERVANT —CONTRIBUTORY NEGLIGENCE.

A primary duty is imposed upon the master to use reasonable care to furnish the servant a reasonably safe place to work in and reasonably safe appliances to work with, and the servant may rely upon the performance of such duty, and is not required at the outset to make a personal inspection, or to exercise any degree of diligence to affirmatively ascertain whether it has been performed.

[Ed. Note.—For other cases, see Master and Servant, Cent. Dig. §§ 710–722; Dec. Dig. ⟹235.]

3. MASTER AND SERVANT ⟹204—ACTION FOR INJURY TO SERVANT—DEFENSES —ASSUMPTION OF RISK.

Under Iowa Code Supp. 1907 and 1913, § 4999a2, which requires the owner of any manufacturing or other establishment where machinery is used to properly guard all cogs, gearing, etc., as construed by the Supreme Court of the state, an owner who has failed to comply with such requirement cannot invoke the doctrine of assumption of risk against an employé injured in such machinery.

[Ed. Note.—For other cases, see Master and Servant, Cent. Dig. §§ 544–546; Dec. Dig. ⟹204.

Assumption of risk incident to employment, see note to Chesapeake & O. R. Co. v. Hennessey, 38 C. C. A. 314.]

4. COURTS ⟹366—FEDERAL COURTS—FOLLOWING STATE DECISIONS.

Where the highest judicial tribunal of a state has placed a construction upon its statutes, the federal courts must follow that construction.

[Ed. Note.—For other cases, see Courts, Cent. Dig. §§ 954–957, 960–968; Dec. Dig. ⟹366.

Conclusiveness of judgment between federal and state courts, see notes to Kansas City, Ft. S. & M. R. Co. v. Morgan, 21 C. C. A. 478; Union & Planters' Bank of City of Memphis, 49 C. C. A. 468; Converse v. Stewart, 118 C. C. A. 215.]

In Error to the District Court of the United States for the Southern District of Iowa; Smith McPherson, Judge.

Action at law by Tony Lamandola against the Iowa Portland Cement Company. Judgment for plaintiff, and defendant brings error. Affirmed.

Jesse A. Miller, of Des Moines, Iowa (J. D. Wallingford and Oliver H. Miller, both of Des Moines, Iowa, on the brief), for plaintiff in error.

Chandler Woodbridge, of Des Moines, Iowa (James P. Hewitt, of Des Moines, Iowa, on the brief), for defendant in error.

Before ADAMS, Circuit Judge, and TRIEBER and REED, District Judges.

ADAMS, Circuit Judge. Lamandola, the plaintiff below, sued the Cement Company for damages alleged to have been sustained by him through its negligence. The defense was a denial of the negligence and pleas of contributory negligence and of assumption of the risk. A recovery was had by him, and the Cement Company prosecutes this writ of error.

The main facts are these: The Cement Company was engaged in the business of manufacturing cement, and for this purpose it required intense heat. To produce this, it installed a plant of this kind: It constructed several large iron or steel cylinders 6 feet in diameter by 35 feet in length, with mechanism to revolve them at approximately 1½ revolutions per minute. Connected with each of these cylinders was a heating apparatus, by means of which heat was carried into and through them for the purpose of drying crushed or ground coal introduced into one end of them. As the cylinders revolved, coal was kept moving through them, from the receiving end, throughout the entire length, until it was finally emptied at the other end in the form of pulverized coal or dust, ready to be blown into the furnaces to intensify the heat. These cylinders were made to revolve by an electrical contrivance connected with them by means of cogwheel gearing. This gearing was located underneath the cylinders, upon a cement foundation, and was not covered or protected by any guard or shield. Underneath it was a hollowed-out space or pit which was kept filled with oil, into which one of the coacting revolving cogwheels was kept constantly immersed. Coal dust accumulated in this pit, and it was the duty of plaintiff to clear it out when necessary and keep it supplied with oil. As he was in the act of removing the accumulated dust on the occasion of his injury, with such instrumentalities as were available to him, his hand was caught in the gearing and badly injured.

There was evidence tending to show that defendant failed to furnish plaintiff a reasonably safe and fit implement with which to clean out the oil pit. This was disputed. There was evidence tending to show that it was impracticable to cover or protect the gearing with a guard. This was disputed. There was evidence tending to show that if the plaintiff had stopped the running of the machinery before he attempted to clean out the pit, or had done the work in some different way and with a somewhat different implement, it could have been safely done and evidence to the contrary. There was also evidence tending to show that it was not usual or practicable to stop the running of the machinery for the purpose of cleaning the pit. On evidence of this kind, which, it is thought, is sufficiently detailed for the purpose of disposing of the assignments of error relied on for a reversal, the cause was submitted to the jury by the late Judge McPherson in a comprehensive charge, covering in an able way the several phases of fact and law applicable to it.

[1] To this charge no exceptions were taken by either party. The only exceptions of any kind taken by the defendant were to the refusal by the court to give certain instructions to the jury in the lan-

guage of the draftsman. Those relied on in the brief for a reversal of the judgment are as follows:

(1) "You are instructed that where there are two ways or methods of doing a thing, and one way is safe or comparatively safe, and the other way is dangerous, or more dangerous, it is a want of ordinary care on the part of the man for him to select and use the more dangerous method, and if in this case you find that the plaintiff could have stopped the drier in question, that is, stopped the machinery of the drier for a few minutes, and while the machinery was not in motion have cleaned out the coal dust which he claims he desired to clean out, but instead of doing this he proceeded to attempt to clean out said coal dust while said machinery was in motion, then you will find that the plaintiff was guilty of contributory negligence and he cannot recover in this case."

(2) "You are instructed that, where there is a comparatively safe and a more dangerous way known to a servant by means of which he may discharge his duty, it is a want of ordinary care for him to select and use a more dangerous way. Applying this rule to this case, if you find that the plaintiff was injured while cleaning or attempting to clean the pit beneath the gear wheels in question, and you further find that there was a safer method which he as a reasonably prudent man could have used to clean the pit, to wit, by the use of a shovel or by first stopping the machinery, then you will find the plaintiff guilty of contributory negligence, and your verdict will be for the defendant."

There was no error in refusing to give these instructions. It is not true that an employé must always and without qualification, adopt the less dangerous method of doing work. The necessities of the case and attending circumstances may in some cases reasonably require an employé to adopt the more dangerous of two ways. The test in all cases is whether, in view of all the facts and circumstances of the case, it would be the exercise of reasonable prudence to do the work as done, even if it were perhaps a more dangerous way than some other way might have been; hence, to lay down a general rule for the guidance of the jury that it is a want of ordinary care (and therefore contributory negligence) for an employé to adopt the more dangerous way, without further qualification, would have been misleading and erroneous.

For another reason also it was not error to refuse to give these instructions. The court in its charge to the jury fully explained to them the obligations of an employé under circumstances hypothecated in these instructions, and substantially gave to the jury the principle of law attempted to be stated in the instructions refused. There was no occasion for repeating the same again.

[2] The chief and most important act of negligence charged against the defendant by plaintiff, and the one mainly relied upon below and here for a recovery by him, was defendant's failure to cover or otherwise protect the gear wheels near the place where plaintiff was required to work. In view of this fact defendant's counsel asked the court to give this instruction to the jury:

"Even if you find that the defendant was negligent, in that it failed to properly guard the machinery in connection with which the plaintiff was injured, yet if you find that the danger was open and obvious, and the plaintiff knew, or *in exercise of reasonable care ought to have known, of such danger*, and such danger was of such a character as that a reasonably prudent person would not have performed the work which the plaintiff claims to have been performing at the time of the injury and in the manner in which the plaintiff

claims to have performed such work, then you will find the plaintiff guilty of contributory negligence, and your verdict will be for the defendant."

This request had some vicious elements in it:

(1) It devolved upon the employé the obligation of exercising reasonable care to ascertain whether a piece of machinery and its surroundings with or about which he was required to work were dangerous. This is not the law. It is well settled by repeated adjudications in this court that a primary duty is imposed upon the master to furnish the servant a reasonably safe place to work in and reasonably safe appliances to work with, or at least to use reasonable care to do so, and that an employé may confidently rely upon the master doing so, and is under no obligation at the outset to make a personal inspection or to exercise any degree of diligence to affirmatively ascertain whether he has done so. It is only when the employé actually knows of defects constituting negligence on the part of the employer, or when they are plainly observable by him, that his continuance in the work constitutes contributory negligence. Republic Elevator Co. v. Lund, 116 C. C. A. 373, 196 Fed. 745, 45 L. R. A. (N. S.) 707, and cases there cited.

(2) This instruction, if otherwise correct, was predicated upon no substantial evidence. Not a particle of evidence appears in the record tending to show any negligent or careless act or motion by plaintiff in the matter of cleaning out the pit which in any manner exposed him to the danger of the gearing. He was engaged at his task by the express command of his superior, and was, so far as the proof shows, doing it with all reasonable care and caution. His injury was the result of his being required to do the work in close proximity to the dangerous and unprotected gearing, and seems to have been purely incidental to defendant's failure to properly guard that gearing.

(3) The court in its general charge had fully stated the law governing the doctrine of contributory negligence applicable generally to all the phases of the case and properly refused to single out and make special comment upon any single fact bearing on it. Perovich v. United States, 205 U. S. 86, 92, 27 Sup. Ct. 456, 51 L. Ed. 722. This is specially true when there is no evidence tending to show any contributory negligence in that particular phase of the case.

[3] Defendant's counsel also requested the court to give this instruction:

"The plaintiff is held by the law to have assumed the usual and ordinary risks incident to the business in which he was engaged, and if you find that the injury of which he complains was the result of an ordinary risk or danger of his employment, then he cannot recover and your verdict must be for the defendant."

The court refused to give this instruction and due exception was saved. There was no error in refusing to give this instruction. Section 4999a2 of the Iowa Code, Supplements 1907 and 1913, provides as follows:

"It shall be the duty of the owner, agent, superintendent or other person having charge of any manufacturing or other establishment where machinery is used, to furnish and supply or cause to be furnished and supplied therein, belt shifters or other safe mechanical contrivances for the purpose of throwing

belts on and off pulleys, and * * * all saws, planers, cogs, gearing," etc., "shall be properly guarded."

The record, as already pointed out, discloses no evidence of negligence on the part of the plaintiff in cleaning out the pit with the implement provided for his use. He was apparently doing it as well and as carefully as he could under the conditions surrounding him. In the absence of the statute of Iowa just quoted his injury would probably be classified as accidental.

[4] The Supreme Court of Iowa, in construing this statute, has held that the defense of assumption of risk is not available to a defendant who has failed to comply with it and to properly guard its machinery when injury results. Poli v. Numa Block Coal Co., 149 Iowa, 104, 127 N. W. 1105, 33 L. R. A. (N. S.) 646; Stephenson, Adm'r, v. Brick & Tile Co., 151 Iowa, 371, 130 N. W. 586; Verlin v. U. S. Gypsum Co., 154 Iowa, 723, 135 N. W. 402. Where the highest judicial tribunal of a state has placed a construction upon its statutes, the courts of the United States must follow that construction. This we did in a case similar to the present one, where we held that the defense of assumption of risk was not available to a defendant who had failed to comply with a statute similar to the one now before us, after the Supreme Court of the state had so held. Columbia Box Co. v. Saucier, 213 Fed. 210, 129 C. C. A. 656.

In the progress of the trial the defendant's counsel called Mr. Ribble, an ex-factory inspector, as a witness, and asked him whether in his opinion the gearing in question in this case required guarding, and whether guarding it would eliminate the danger incident to being caught in the gears, and whether he as factory inspector ever gave any direction to the Cement Company with respect to guarding their gearing, etc. These questions were objected to by plaintiff's counsel, disallowed by the court, and due exceptions taken. There was no error in these rulings. The beneficent statute of the state invoked by plaintiff cannot be frittered away by opinions of an executive officer.

Defendant's counsel have urged some other objections to the proceedings below, all of which have been duly considered and found to be without substantial merit.

The judgment is affirmed.

LEE WILSON & CO. v. UNITED STATES.

(Circuit Court of Appeals, Eighth Circuit. November 4, 1915.)

No. 4278.

1. PUBLIC LANDS ⟹59—CONSTRUCTION OF PATENT—LANDS MEANDERED AS LAKE.

The United States patented to the state of Arkansas, under Swamp Land Act Sept. 28, 1850, c. 84 (9 Stat. 519), the whole of a described township of land, "except section 16, containing 14,565.03 acres according to the official plats of survey of the said lands returned to the General Land Office by the Surveyor General." According to such survey a certain part of the township was meandered and platted as a navigable lake, but was

⟹For other cases see same topic & KEY-NUMBER in all Key-Numbered Digests & Indexes

not in fact a lake, nor submerged land, either at the time of survey or issuance of the patent. *Held*, that the land thus meandered and platted did not pass under the patent.

[Ed. Note.—For other cases, see Public Lands, Cent. Dig. §§ 184, 185; Dec. Dig. ⟹59.]

2. WATERS AND WATER COURSES ⟹111—LAKES—MEANDER LINES—DESCRIPTION OF LAND.

A purchaser from the state of fractional sections, described as such in the deed, and which according to the survey and plat were bounded by the meander line of a lake, took no title to any part of the land so meandered out.

[Ed. Note.—For other cases, see Waters and Water Courses, Cent. Dig. § 120; Dec. Dig. ⟹111.]

3. PUBLIC LANDS ⟹61—SWAMP LAND GRANT—ACT CONFIRMING TITLE OF GRANTEES OF STATE.

The state, having accepted the patent with the description as therein given, had no claim on the land meandered out as a lake, which would come within the provisions of Act April 29, 1898, 30 Stat. 367, confirming the title of grantees of the state to "any unconfirmed swamp land."

[Ed. Note.—For other cases, see Public Lands, Cent. Dig. §§ 192–213; Dec. Dig. ⟹61.]

Appeal from the District Court of the United States for the Eastern District of Arkansas; Jacob Trieber, Judge.

Suit in equity by the United States against Lee Wilson & Co. Decree for the United States, and defendant appeals. Affirmed.

For opinion below, see 214 Fed. 630.

Charles T. Coleman, of Little Rock, Ark. (William M. Lewis, of Little Rock, Ark., on the brief), for appellant.

W. N. Mills, Sp. Asst. Atty. Gen., of San Francisco, Cal. (W. H. Martin, U. S. Atty., of Hot Springs, Ark., and J. A. Tellier, Sp. Asst. Atty. Gen., of Little Rock, Ark., on the brief), for appellee.

Henry D. Ashley, of Kansas City, Mo., amicus curiæ.

Before SANBORN and CARLAND, Circuit Judges, and LEWIS, District Judge.

CARLAND, Circuit Judge. A correct decision of the issues involved in this case is of the greatest importance. We think the case is mainly ruled by Little v. Williams, 231 U. S. 335, 34 Sup. Ct. 68, 58 L. Ed. 256; Chapman & Dewey Lumber Co. v. St. Francis Levee District, 232 U. S. 186, 34 Sup. Ct. 297, 58 L. Ed. 564; Id., 234 U. S. 667, 34 Sup. Ct. 906, 58 L. Ed. 1526; Security Land & Exploration Co. v. Burns, 193 U. S. 167, 24 Sup. Ct. 425, 48 L. Ed. 662; French Glenn Live Stock Co. v. Springer, 185 U. S. 47, 22 Sup. Ct. 563, 46 L. Ed. 800; Niles v. Cedar Point Club, 175 U. S. 300, 20 Sup. Ct. 124, 44 L. Ed. 171.

The bill was filed to quiet title to one body of land containing 853.6 acres, composing parts of sections 22, 26, and 27, in township 12 north, range 9 east, in Mississippi county, Ark. Three individuals were joined with appellant as defendants below, but they disclaim. The lands became a part of the public domain in 1803 by acquisition

from the French republic, and of course remained such, unless the government had parted with its title. The appellant claims that it had done so, and that title thereto is now vested in it. It puts forth several reasons to sustain this claim; and those reasons are these:

[1] 1. That by virtue of the provisions of Act Sept. 28, 1850 (9 Stat. 519), and the procedure therein authorized, which was regularly taken, title to said lands passed to the state of Arkansas and thereafter that title became vested in appellant.

The facts relative to that claim are these: In 1839 and 1840 the township (township 12) was surveyed and established, and thereafter in 1841 the subdivisional lines were located and the township sectionized; that after the passage of the Swamp Land Act, supra, and in 1853, the state selected the entire township, as authorized by the act, and thereafter, and on the 27th day of September, 1858, all of said township was conveyed by patent to the state. The survey of 1841 meandered the lands in controversy as being a lake. The notes of the survey report the lake and also a bayou, as its outlet to the southwest, as navigable. The lands were platted in accordance with the survey showing the lake as meandered. It may be conceded that the selection as made by the Governor of the state was of the entire township, and that if the description in the patent had corresponded with the terms of the selection, the lands in controversy, which were represented as being then covered by the lake, would have passed under the patent. The description in the selection is in these words:

Parts of Sections	Section	Township	Range	Surveyed Area Acres Hdths.	Unsurveyed Area Acres Hdths.	Total Area Acres Hdths.
Township		12	9	(Except Section 16)		14,565.03

But when the patent was issued some five years later the description therein given is this:

"Township twelve (12) north, range nine (9) east. The whole of the township except section sixteen (16), containing fourteen thousand five hundred sixty-five acres and three-hundredths of an acre, according to the official plats of survey of the said lands returned to the General Land Office, by the Surveyor General."

And the patent with the lands thus described having been received and accepted by the state rendered the terms used in describing the lands in the selection irrelevant and immaterial in thereafter determining what lands passed by the patent; so the terms of the selection may be omitted from further consideration. Looking, then, to the patent, it follows that the lands which were meandered out and shown upon the plat as a lake did not pass under the patent unless the lake did in fact exist. Little v. Williams, 231 U. S. 335, 34 Sup. Ct. 68, 58 L. Ed. 256; Lumber Co. v. District, 232 U. S. 186, 34 Sup. Ct. 297, 58 L. Ed. 564.

The trial court held that a preponderance of the evidence went strongly to establish that the lands were not submerged lands and that there was not a lake as shown upon the plat at the time of the survey; that no depression can be noticed in the meandered area, and that there is no appreciable difference in the elevation between the lands on the two sides of the meander line. It further found that there is now a heavy growth of large, living trees on the lands; that there was testimony that many of the trees were over 70 and some over 200 years old, and that they could not have grown on submerged lands; and said that it "is convinced beyond a reasonable doubt that there was no permanent body of water on the land meandered at the time the original survey was made, nor for a long period before that time, nor at the time of the passage of the act of 1850, or at the time the state made its selection."

The trial court also called attention to the fact that the Secretary of the Interior in 1908, after a hearing of a controversy between parties who desired to acquire the lands in controversy as homesteads, and others who claimed as riparian owners, made a like finding to the effect that the lands were not covered by a permanent body of water at the time of the original survey or at the time of the enactment of the Swamp Land Act, or when the state made its selection. It therefore seems to be conclusively established that the lands did not pass under the patent of September 27, 1858.

[2] 2. The appellant further contends that the state acquired title to the lands under Act April 29, 1898 (30 Stat. 367), approving a compromise which had theretofore been authorized and made between the United States and Arkansas of a long-existing controversy concerning swamp and overflowed lands and the title thereto. That act provided:

> "That the title of all persons who have purchased from the state of Arkansas any unconfirmed swamp land and hold deeds for the same be, and the same is hereby, confirmed and made valid as against any claim or right of the United States."

Between the time that the state made its selection of township 12, as is claimed, and the time that it received the patent dated in September, 1858, one William B. Waldron made application to the commissioners of state lands to purchase "Frl. Sec. 22, T. 12 N., R. 9 E., 164.12 acres, Frl. Section 26, T. 12 N., R. 9 E., 623.83 acres," and "Frl. Section 27, T. 12 N., R. 9 E., 291.98 acres," and he was permitted to enter the same as swamp and overflowed lands. Thereafter and in 1859 the state issued its patent conveying to Waldron all of said lands for which he applied and described therein in the same way as fractional sections. The patents to Waldron, therefore, did not purport to convey any of the lands which had been meandered out as the lake, and, as there was no lake, the meandered area could not pass as riparian to the fractional sections. It therefore cannot be said that the transaction between Waldron and the state in his purchase of the lands came within the contemplation of the act of 1898. He applied only for the fractional sections, and the fractional sections were conveyed to him. The meander line,

therefore, constituted one of his boundary lines, beyond which he could not go. 185 U. S. 47, 22 Sup. Ct. 563, 46 L. Ed. 800; 232 U. S. 186, 34 Sup. Ct. 297, 58 L. Ed. 564.

[3] Waldron and his grantees lost title which they obtained through Waldron's patent from the state to the fractional sections by decrees and sales for overdue and unpaid taxes, and the state became the purchaser at those sales and was thereby reinvested with the title which it had patented to Waldron. These conveyances back to the state occurred as to the different tracts between 1883 and 1888, and thereafter in March, 1893, the state conveyed to the St. Francis levee district, and thereafter in 1894 the levee district obtained a decree of the chancery court confirming in it title to all of sections 22, 26, and 27, which, of course, includes the lands in controversy. Thereafter the levee district attempted to pass title thus confirmed in it to all of said sections to its several grantees, and by mesne conveyances such purported title passed to appellant. From 1900 to 1910 special levies were made by the district upon all of the lands in all three sections for drainage purposes, and they had been paid for each of those years by their purported owners, including the appellant. The same is true, we think, as to general taxes for state and county purposes. On these facts appellant again invokes Act May 2, 1898, and also an estoppel against the appellee; but we see nothing in the title thus acquired by the state under the tax sales which would make the compromise act applicable to that situation. The only selection of swamp lands made in township 12 by the state is the one above referred to and made in 1853, but the state did not stand on the terms of that selection as made. It accepted the patent of September 27, 1858, with the lands otherwise described, which we think must be taken as a modification of the terms of its selection and as adopting for that purpose the description in the patent itself. It therefore cannot be said that at the time of the passage of Act May 2, 1898, the state had pending any unconfirmed selection of swamp and overflowed lands in township 12, so far as anything appears from the record.

3. As above noted, appellant relies also on the claim of estoppel and that it is a bona fide purchaser. The facts in both of those respects are sufficiently stated and discussed in the opinion of Judge Trieber (214 Fed. 630) and in which opinion in relation thereto we concur.

Affirmed.

FIELDER et al. v. UNITED STATES.

(Circuit Court of Appeals, Eighth Circuit. September 27, 1915.)

No. 4403.

1. CRIMINAL LAW ⟹775, 782—TRIAL—INSTRUCTIONS.

In a prosecution for introducing liquor from without into that part of the state of Oklahoma which was formerly the Indian Territory, in violation of Act March 1, 1895, c. 145, 28 Stat. 693, charges that the jury as men of affairs understood that people frequently who have in mind to violate the law do so in such a way as to avoid detection, if possible, that the jury were the triers of fact, and suggestions by the court as to the weight of testimony were not binding, that the court deemed the jury should have little difficulty in arriving at the conclusion that the liquor came from without the state, and was introduced into the county by some one, and that an alibi is a proper defense, but more easy to fabricate than some other defenses, were not erroneous.

[Ed. Note.—For other cases, see Criminal Law, Cent. Dig. §§ 1833–1837, 1847, 1849, 1851, 1852, 1877, 1878, 1880–1882, 1906, 1907, 1909–1911, 1960, 1966, 1967; Dec. Dig. ⟹775, 782.]

2. CRIMINAL LAW ⟹1036—APPEAL—PRESENTATION OF GROUNDS OF REVIEW IN COURT BELOW—NECESSITY.

Ordinarily the appellate courts will not consider the question whether there was substantial evidence to sustain a verdict, in the absence of a motion for instructed verdict by the defeated party at the close of the trial, and an exception to its denial; but in a criminal case, where the life or liberty of the citizen is at stake, the appellate court may, in the interests of justice, examine the evidence to see whether there was any substantial evidence whatever against accused, and, if none is found, reverse the conviction, though there was no motion for directed verdict, and no exception was taken, or assignment of error made.

[Ed. Note.—For other cases, see Criminal Law, Cent. Dig. §§ 1631–1640, 2639–2641; Dec. Dig. ⟹1036.]

3. INDIANS ⟹38—INTRODUCING LIQUOR INTO INDIAN COUNTRY—EVIDENCE.

In a prosecution for introducing intoxicants from without into that part of the state of Oklahoma which was formerly the Indian Territory, in violation of Act March 1, 1895, evidence *held* sufficient to sustain a conviction as to one of the defendants, but not as to the other.

[Ed. Note.—For other cases, see Indians, Cent. Dig. §§ 22, 64, 66; Dec. Dig. ⟹38.

Introducing intoxicating liquors into Indian country, see note to Joplin Mercantile Co. v. United States, 131 C. C. A. 171.]

In Error to the District Court of the United States for the Eastern District of Oklahoma; Ralph E. Campbell, Judge.

C. E. Fielder and Tom Ford were convicted of introducing liquor from without the state of Oklahoma into that part of the state which was formerly the Indian Territory, and they bring error. Affirmed as to defendant Fielder, and reversed and remanded as to defendant Ford.

Guy H. Sigler, of Ardmore, Okl., for plaintiffs in error.

W. P. McGinnis, Sp. Asst. U. S. Atty., and D. H. Linebaugh, U. S. Atty., both of Muskogee, Okl.

Before SANBORN and CARLAND, Circuit Judges, and TRIEBER, District Judge.

SANBORN, Circuit Judge. The defendants below in this case were convicted of introducing liquor from without the state of Oklahoma into that part of the state which was formerly the Indian Territory in violation of Act March 1, 1895, c. 145, 28 Stat. 693, and each of them was sentenced to imprisonment in the United States penitentiary at Leavenworth for the period of 18 months and to pay a fine of $150.

[1] They complain of their trial on the grounds that the court charged the jury that "You, as men of affairs, of course understand that, without reference to this particular case, it is the common knowledge of all of us that people frequently, who have in mind to violate the law, do so in such a way as if possible to avoid detection, to avoid having eyewitnesses;" that "Now you are the triers of the facts in this case and not the court. Any suggestions I might have with regard to this testimony, or what I deem it to prove, or what weight I might deem it to have, is not binding on you. * * * I think from the evidence in this case, I think you will have little difficulty in arriving at the conclusion that the liquor came from without the state, and was being introduced into Carter county, in this state, by some one;" that "An alibi is a proper defense in a criminal case; it is a defense which as men of affairs you know is more easy of—more easy to build up than some other defenses and somewhat more difficult to controvert than some other defenses;" and that the court submitted the question of the guilt or innocence of the accused to the jury when there was no substantial evidence of the guilt of either of them. It is too clear for discussion that there was no error in the excerpts from the charge which are challenged, and they are dismissed without further notice.

[2] It is the general rule of the Supreme Court and of this court that the appellate courts will not consider the question whether or not there was substantial evidence to sustain a verdict, in the absence of a motion or request for an instructed verdict by the defeated party at the close of the trial and an exception to its denial. There was no such motion, request, or exception in this case, and counsel for the government object to the consideration of the evidence and invoke this rule. There is, however, an exception to the rule to the effect that in a criminal case, where the life or liberty of the citizen is at stake, the appellate court may, in the interest of justice, examine the evidence to see whether there was any substantial evidence whatever against the accused, and if none is found may reverse the judgment, although no motion or request was made on that ground, and no exception was taken or assignment of error made. Wiborg v. United States, 163 U. S. 632, 658, 16 Sup. Ct. 1127, 41 L. Ed. 289; Sykes v. United States, 204 Fed. 909, 913, 914, 123 C. C. A. 205, 209, 210; Clyatt v. United States, 197 U. S. 207, 221, 25 Sup. Ct. 429, 49 L. Ed. 726; Crawford v. United States, 212 U. S. 183, 194, 24 Sup. Ct. 260, 53 L. Ed. 465, 15 Ann. Cas. 392; Weems v. United States, 217 U. S. 349, 362, 30 Sup. Ct. 544, 54 L. Ed. 793, 19 Ann. Cas. 705; Williams v. United States, 158 Fed. 30, 36, 88 C. C. A. 296, 302; Humes v. United States, 182 Fed. 485, 486, 105 C. C. A. 158, 159; Pettine v. New Mexico, 201 Fed. 489, 497, 119 C. C. A. 581, 589.

[3] The evidence in the record of the trial of this case has been carefully read, to ascertain whether or not there was any substantial evidence against the defendants below under this exception to the rule. It is this: The defendant Fielder borrowed a horse and buggy of the nephew of the defendant Ford, and drove about seven miles south from Muskogee alongside the Santa Fé Railroad, which extends from Ft. Worth, Tex., to Muskogee, Okl., in the forenoon of May 17, 1914, at such a time that he arrived at the point where the wagon road turns west from the railroad a few minutes before the regular passenger train from Ft. Worth to Muskogee passed that point. He then turned and drove west about 300 yards, stopped, alighted from his buggy, waited until the train approached, then drove back to the railroad, waited until the train passed, then drove into a field to the fence along the right of way of the railroad, climbed over that fence, picked up and was loading two telescopes, each of which contained a keg of intoxicating liquors, which had been kicked off the train as it passed without stopping, when he was arrested. Two more telescopes, each containing a keg of liquor, were then found by the side of the railroad track. O. F. Hill & Co., of Ft. Worth, Tex., were wholesale liquor dealers, and one of the kegs was marked with their name. Fielder was a man who worked at such jobs as he could find, and a witness for the government testified that all the business he knew of his doing was whisky business.

Ford owned and operated a wagon yard and handled whisky in connection with it. The officer who arrested Fielder saw on the steps of one of the passenger coaches of the train a man about the size of Ford, dressed in a light suit, and Ford wore a light suit in the afternoon of that day, when he assisted in getting a bond for Fielder; but Ford and two other witnesses testified that he was at his residence in Muskogee at such hours that he could not have been on that train unless their testimony was false. The facts that the telescopes of liquor from wholesale liquor dealers in Texas were thrown off the passenger train which Fielder drove several miles to meet, that he waited for that train and picked them up and proceeded to load them, constitute substantial evidence that he knew they were coming, that their destination was not the right of way where they landed, but some other place in the part of Oklahoma in which he picked them up, and that he was engaged in continuing their transportation to that place, probably Muskogee, and here was substantial evidence from which a jury might lawfully find that he was engaged in introducing the liquor from without the state into that part of Oklahoma to which he was transporting it. But there was no such testimony against Ford. There was no evidence that he knew before Fielder was arrested that his nephew loaned his horse and buggy to Fielder, or for what purpose Fielder had borrowed it, no evidence that he had ordered the introduction of the liquor, no evidence that he knew it was coming, or that he had any interest in or connection with it, for the testimony of one witness that he saw a man of his size dressed in a light suit on the train and the fact that he procured or made the bond for Fielder are too remote and inconsequential to constitute any substantial evidence that

Ford introduced or aided in introducing the liquor from Texas into any part of Oklahoma.

The judgment against Fielder must accordingly be affirmed, and the judgment against Ford must be reversed, and his case must be remanded to the court below, with instructions to grant a new trial.

And it is so ordered.

ALLAUN et al. v. GLEN BROOK COAL CO.

(Circuit Court of Appeals, Third Circuit. November 29, 1915.)

No. 1978.

EVIDENCE ⟹357—ADMISSIBILITY—CORRESPONDENCE BETWEEN PARTIES.

Defendants, who constituted a committee appointed by creditors of a corporation engaged in the performance of a government contract, ordered coal from plaintiff for the use of the company. *Held*, in an action to recover from defendants a balance due for such coal, that letters passing between the parties were properly admitted in evidence as bearing on the question whether defendants purchased the coal on their own credit or merely as agents for the company.

[Ed. Note.—For other cases, see Evidence, Cent. Dig. §§ 1492–1499; Dec. Dig. ⟹357.]

In Error to the District Court of the United States for the Eastern District of Pennsylvania; J. Whitaker Thompson, Judge.

Action at law by the Glen Brook Coal Company against Maurice Allaun and others. Judgment for plaintiff, and defendants bring error. Affirmed.

Thomas McConnell, Jr., Harry S. Mesirov, and Henry M. Du Bois, all of Philadelphia, Pa., for plaintiffs in error.

George W. Harkins, Jr., and Howard H. Yocum, both of Philadelphia, Pa., for defendant in error.

Before BUFFINGTON, McPHERSON, and WOOLLEY, Circuit Judges.

PER CURIAM. In this suit the Glen Brook Coal Company sought to establish the individual liability of the defendants for coal furnished to the Atlantic Dredging Company under two agreements, one of them made in July, 1911, and the other in March, 1913. The only defense was that the defendants were acting in a representative character, and that the agreements were entered into on behalf of the Dredging Company. This issue was submitted to the jury, and the verdict was in favor of the plaintiff. There is no assignment of error to the charge, and in this court we must accept the verdict as determining the question of liability against the defendants. The only point now open, therefore, is whether any harmful error was committed during the trial, and in this respect no complaint is made except concerning the admission of several letters. The question presented will be made clear by a brief outline of the facts.

In September, 1910, the Dredging Company (which was carrying

out a contract with the United States) became financially embarrassed, and its condition was considered at a creditors' meeting. The creditors proposed and the company agreed that a committee of three creditors should be appointed, with the following powers and duties, inter alia:

"The business of said Atlantic Dredging Company shall be conducted by its officers and directors under the supervision and advice of said committee until such time as this agreement may be discontinued under its terms. All moneys received must be deposited in the name of this committee and disbursed by them.

"All claims and expenses arising hereafter shall be promptly paid in full from current receipts, and from the balance of said receipts, if any, the committee shall declare dividends to all creditors of said Atlantic Dredging Company as rapidly as in their judgment the circumstances will justify."

The committee entered upon its duties, but the extent of its activity is not very definitely proved. In the summer of 1911 a contract was made by members of the committee with the Glen Brook Coal Company—which was not a creditor of the Dredging Company—and coal was delivered thereunder at intervals until November 23d. At that date a balance of about $400 remained unpaid, and letters in reference to this balance were exchanged between the Coal Company and the committee at frequent intervals from December 28, 1911, to February 21, 1913. The following letters are fair examples of the tone and scope of the correspondence:

"April 23, 1912.

"Mr. T. W. Miller, Chairman, Committee of Creditors, Atlantic Dredging Company—Dear Sir: Under date of the 13th instant we took the liberty of again calling your attention to our account, amounting to $392.40, for coal furnished during September and November, 1911, but up to this time have had no response from you. We will be glad to have you advise us as promptly as possible when we may expect to receive a remittance to cover this.

"Very truly yours, E. M. Ramsey, Jr.,
"Secretary and Treasurer."

"Wilmington, Del., April 24, 1912.

"Glen Brook Coal Company, Philadelphia, Pa.—Gentlemen: I beg to acknowledge receipt of your favor of the 23d and also letter of the 13th, and have not answered same, as we have been waiting every day to have the government give us some notice of release from our contract and pay us the balance due on contract as well as for work that we have executed during the months of March and April. Up to this date we have had no acceptance, but simply have had more work put on us, and I have a letter from one of the committee to-day in which he states that he hopes within the next week matters will be in such shape that the release will be made possible. We have not had one cent of money from the government since last December and this committee has had to finance the whole operation out of our own pockets up to the present time, consequently we are not in shape to hand you any money. The writer assured you that everything possible will be done looking towards paying this claim just as soon as we get funds, and it will be utterly useless for you to sue or get judgment, inasmuch as same could not be executed, for the reason that the government holds a prior claim on the outfit until the contract is completed, and it would only put unnecessary expense on the account. I am willing to be perfectly frank with you in this matter, as we are doing our very best to carry out the contract in accordance with the desires of the creditors' committee and as we are being forced to do by the government. * * *

"Yours very truly, T. W. Miller."

In March, 1913, a second contract was entered into, under which deliveries were made until July of that year, when further performance was abandoned by mutual consent, a balance of about $3,600 remaining unpaid.

At the trial the correspondence referred to was offered in evidence, the letter of December 28th being admitted to prove "notice that the plaintiff expected to hold the committee liable," and the whole series being finally admitted "as bearing on the first shipment only." At the close of the plaintiff's case its counsel asked that the letters might be considered by the jury "with respect also to the second contract, so far as they may throw light upon the manner of dealing"; but this request was not passed upon by the court, either then or afterward. Neither side asked for instructions on this subject, and the remarks in the charge concerning the correspondence must in fairness be taken as applying to the letters in their relation to the first contract only. Their admission being the single error insisted upon, we think it enough to say that after reading them with care we are unable to hold that the District Court was wrong. While the correspondence might easily have been more definite, and while some of the letters are susceptible of two interpretations, we think their bearing upon the issue, as far as the first contract is concerned, was a proper subject for the jury to consider. They were to be read in the light of all the circumstances, and it was for the jury to determine whether they showed a claim by the plaintiff that the committee was individually responsible, and (if so) how far such a claim called for denial.

The second contract depended mainly upon conflicting oral testimony, and upon this matter the verdict is final. If the defendants have any justifiable ground of complaint, it lies against the verdict (which is beyond our power) rather than against the rulings of the trial judge.

The judgment is affirmed.

THULLEN v. TRIUMPH ELECTRIC CO.

(Circuit Court of Appeals, Third Circuit. December 3, 1915.)

No. 1987.

1. EVIDENCE ⟹398—PAROL EVIDENCE RULE.

Where the negotiations concerning a contract of employment were reduced to writing in a letter dictated in plaintiff's presence and accepted by him, the letter is the best evidence of the agreement and cannot be varied by parol.

[Ed. Note.—For other cases, see Evidence, Cent. Dig. §§ 1766–1771; Dec. Dig. ⟹398.]

2. MASTER AND SERVANT ⟹8—CONTRACTS OF EMPLOYMENT—HIRING.

Where the letters containing a contract of hiring fixed no express period of service, but merely declared that payments at a yearly rate should be made in monthly installments, the contract was one at will, and might be terminated during the year, without rendering the employer liable for the salary for that period.

[Ed. Note.—For other cases, see Master and Servant, Cent. Dig. §§ 8–10, 17; Dec. Dig. ⟹8.]

In Error to the District Court of the United States for the Eastern District of Pennsylvania; J. Whitaker Thompson, Judge.

Action by L. H. Thullen against the Triumph Electric Company. There was a judgment for defendant, and plaintiff brings error. Affirmed.

See, also, 215 Fed. 939.

Furth, Singer & Bortin, of Philadelphia, Pa., for plaintiff in error.

Harold B. Beitler, of Philadelphia, Pa., for defendant in error.

Before BUFFINGTON, McPHERSON, and WOOLLEY, Circuit Judges.

McPHERSON, Circuit Judge. At the trial below the court directed a verdict for the defendant, and the only question to be considered on this writ is whether the evidence required submission to the jury. The facts are as follows:

L. H. Thullen, an electrical engineer, was in the service of the electric company for 3 years and 5 months from December, 1909. In May, 1913, he was discharged, and is now suing for salary alleged to be due from the time of discharge until February, 1914. The original contract was made in November, 1909. The company had advertised for a chief engineer, Thullen had replied, several letters were exchanged, a personal interview followed, and finally the company wrote a letter on November 22d, which was accepted by Thullen, and was acted under by both parties for a year and a half. The parts of that letter now pertinent are as follows:

"Dear Sir:

"Confirming our conversation of Saturday, we will pay you a salary at the rate of four thousand ($4,000.00) dollars per annum as chief electrical engineer of this company, the duties to be those generally appertaining to such position as discussed in detail by us. * * *

"It is understood that the above shall go into effect as soon as you are ready to report here for duty, which we now understand will be Monday, Dec. 6th.

"It is the writer's hope in concluding this agreement that it will prove so mutually satisfactory as to mark the commencement of a long period of pleasant and profitable business association."

[1] At the trial, the only witnesses examined were Thullen and one of the company's officers, and both were allowed to testify to the conversation that preceded the letter. They differed in some particulars, but Thullen himself testified that the letter was dictated in his presence, was submitted to him, and was accepted as containing his idea of the discussion. We agree, therefore, with the trial judge that the letter is the best evidence of the agreement and is binding upon both. From December 6, 1909, when the plaintiff began his service, until July 1, 1911, he was paid "at the rate of four thousand ($4,000) dollars per annum."

On July 1st, following several conversations between the parties, a new arrangement about salary was made, and a second letter was written and accepted, which states:

"Confirming our conversation of a few days ago, we agree to make your salary *for the year 1911*, commencing Feb. 1, 1911, and ending Feb. 1, 1912,

five thousand ($5,000.00) dollars, payable in such equal monthly installments, commencing July 1st, as will equal the above amount at the end of the year.

"We further agree that at the end of the year (February, 1912), *provided you have remained in our employ that length of time*, to transfer to you ten shares of the common stock of this company.

"Commencing Feb. 1, 1912, we agree to make your salary *at the rate* of $6,000 per year, payable in equal monthly installments, and at the end of the year (Feb. 1, 1913) to transfer ten shares of the common stock of the company to you on the same condition as above."

Salary was paid in accordance with this letter, which may perhaps make a distinction (as will be observed from the words we have italicized) between the year 1911–12, and the year 1912–13. It is not necessary to dwell on the distinction, however, as no dispute arose until May, 1913. On February 20, 1912, a third letter was written to supplement the letter of July 1, 1911. The letter of November, 1909, contained several provisions about patents that are not now material, but were regarded as important by the parties. The letter of July 1 was silent about these provisions, and, lest this silence should be misconstrued, the third letter states:

"In response to your request please note that it is our understanding that our agreement with you of July 1, 1911, applies solely to the amount of compensation and the terms of payment; all other clauses of our agreement of November 22, 1909, remaining in effect.

"In other words, we have not canceled the original agreement, but have simply added a supplemental agreement covering compensation and terms of payment."

A few weeks later the company discharged the plaintiff for a reason it considered sufficient, paying him two weeks' salary in advance and three shares of stock. He sues for the balance of $6,000 from February, 1913, to February, 1914, as stated in the letter of July 1.

[2] The authorities show some difference of opinion concerning the method of stating the American rule that governs a contract of hiring for an indefinite period. The subject is discussed in Wood, Master and Servant (2d Ed.) § 136, and in the note to Warden v. Hinds, 25 L. R. A. (N. S.) 529. Numerous cases are collected also in 26 Cyc. at page 974, where we think the situation is accurately presented:

"In the United States a general or indefinite hiring is presumed to be a hiring at will, in the absence of evidence of custom or of facts and circumstances showing a contrary intention on the part of the parties. While it is generally held that the fact of a hiring at so much per day, week, month, quarter, or year raises no presumption that the hiring was for such a period, but only at the rate fixed for whatever time the party may serve, yet the rate and mode of payment are often determinative of the period of service, and in some cases it has been held that they raise a presumption as to the period of service."

The rule in Pennsylvania has been referred to in the very recent case of Hogle v. De Long Co., 248 Pa. 471, 94 Atl. 190:

"'In a contract of hiring, when no definite period is expressed, in the absence of facts and circumstances showing a different intention, the law will presume a hiring at will. The fact that the hiring is at so much per week, or month, or year, will raise no presumption that the hiring was for such period.' Weidman v. United Cigar Stores Co., 223 Pa. 160 [72 Atl. 377, 132 Am. St. Rep. 727]. This is a statement of a general rule, so widely recognized that this is said of it by Labatt in his work on Master and Servant, in section

160: 'A preponderance of American authority in favor of the doctrine that an indefinite hiring is presumptively a hiring at will is so great that it is now scarcely open to criticism.' "

Applying this rule to the record before us, we find that no period of service was expressly fixed (except perhaps for the year 1911–12, with which we are not concerned), but merely that payment was to be made at a yearly rate during an unspecified period, which the parties hoped in courteous phrase might be "a long period of pleasant and profitable business association." Presumptively, therefore, the hiring was at will, and the plaintiff was obliged to overcome the presumption by proving facts and circumstances from which the inference could safely be drawn that the real agreement of the parties was a hiring by the year. But this burden was not sustained. We have found nothing of substance in the record to contradict or to modify the letters already quoted, and the trial judge was therefore right in giving the instruction complained of.

The judgment is affirmed.

PORTER v. STUART et al.

In re CAMPBELL.

(Circuit Court of Appeals, Fifth Circuit. November 6, 1915.)

No. 2839.

MORTGAGES ⟹181—PRIORITY AS BETWEEN MORTGAGEES—WRONGFUL DISCHARGE OF PRIOR MORTGAGE.

A mortgagee of lots, on leaving the state for a number of months, executed a power of attorney to an agent, authorizing him to release from the mortgage any or all of the lots on payment to him of a stated sum per lot, which power of attorney was recorded. The agent executed releases of a number of the lots; the releases reciting payment of the required sums, which were in fact not paid. The releases were recorded, and the mortgagor again mortgaged the lots to others. *Held*, that the subsequent mortgagees, as against the first mortgagee, were entitled to rely upon the record, and that their mortgages were entitled to priority over his.

[Ed. Note.—For other cases, see Mortgages, Cent. Dig. §§ 435, 436; Dec. Dig. ⟹181.]

Petition to Superintend and Revise from the District Court of the United States for the Middle District of Alabama; Henry D. Clayton, Judge.

In the matter of M. B. Campbell, bankrupt; George Stuart, trustee. On petition by Charles D. Porter to revise an order of the District Court. Affirmed.

W. W. Hill, A. F. Whiting, and P. H. Stern, all of Montgomery, Ala., for petitioner.

Fred S. Ball, J. Talbert Letcher, and J. R. Thomas, all of Montgomery, Ala., for respondents.

Before PARDEE and WALKER, Circuit Judges, and FOSTER, District Judge.

WALKER, Circuit Judge. The petitioner, Charles D. Porter, on January 27, 1914, made a loan to M. B. Campbell, the bankrupt herein, of $7,200 for six months, taking as security therefor a first mortgage on certain lots of a platted tract of land near Montgomery, Ala. This mortgage was duly recorded. At or about the time the mortgage was executed it was agreed in writing between Porter and Campbell that any or all of the lots might be released from the mortgage upon the payment by Campbell of $600 per lot. Porter, desiring to leave Montgomery for a visit to Tennessee (which lasted till some time in the following November), on July 28, 1914, executed to M. M. Sweatt a power of attorney to release and discharge from the mortgage any lot therein described upon the payment to him of the sum of $600 for each lot so released. This power of attorney was promptly recorded. During Porter's absence in Tennessee, Sweatt as attorney in fact released on the record several of the lots; his recorded release reciting the payment to him of $600 for each lot released. This recital was false; Sweatt not having received the money as stated. Thereafter, while Porter was still absent in Tennessee, other persons, relying on the recorded releases executed by Sweatt and their recitals of payment as called for by the recorded power of attorney to him, lent money to Campbell on his mortgages to them of the lots shown by the record to have been released. They acted in good faith and without knowledge that Sweatt had not received the $600 in each case. After these mortgages were executed Campbell was adjudged a bankrupt, and the lots came into the possession of his trustee in bankruptcy. Porter on the one hand, and the subsequent mortgagees on the other hand, each claimed that his mortgage was entitled to priority. After a hearing on the conflicting claims, the referee decided in favor of the subsequent mortgagees, and this decision was affirmed by the District Court. The matter is here on Porter's petition to superintend and revise.

We are of opinion that the assailed rulings were proper. It is contended in behalf of the petitioner that the claims of the subsequent mortgagees to priority cannot prevail, because they are to be regarded as having dealt with Sweatt as Porter's special agent, and as being subject to the rule that the principal of such an agent is bound only by the acts of the agent which are in accordance with his authority, and that a third party dealing with such an agent is bound at his peril to ascertain the extent of the agent's authority, and that what he does is in conformity with the authority conferred. We are of opinion that this contention involves a disregard of material features of the case presented. Assuming that the reliance by the subsequent mortgagees on the releases found on the public records amounted to their dealing with Sweatt as Porter's special agent, though they did not otherwise have any transaction with him, yet we are of opinion that the conduct of the principal himself was such that it materially contributed to misleading the subsequent mortgagees to the conclusion, from what was found on the public records, that the lots they took as security had been properly released from the lien of the mortgage to Porter. The record disclosed that the day after Porter's mortgage was due he executed the power of attorney to Sweatt, and

that thereafter Sweatt executed releases, the recitals of which showed full compliance with the terms of the power. When the subsequent mortgagees acted on the faith of these records, Porter was out of the state. The record clearly indicated that when he left he anticipated that that would be done which the releases showed had been done. The only person in the state to whom the subsequent mortgagees reasonably could have been expected to apply for information as to a compliance or noncompliance with the condition stated in the power of attorney had stated the facts constituting such compliance in the formal releases found on the record. Reasonable prudence did not require one contemplating dealings with the released property to seek from the attorney in fact in person a reiteration of that statement.

Nor do we think that reasonable prudence required such a person to undertake to get into communication with Porter while he was out of the state; he having, before leaving, delegated to his attorney in fact power to take all required action in the matter. He put it in the power of the agent he selected to make the public records show that the lots had effectually been released. In doing this he must have had it in contemplation that others subsequently might deal with the owner with reference to the lots, and that they would rely on what the public records showed as to the condition of the title, and on the apparent authority of the person executing a recorded release, unless they had notice of some fact indicating that that authority was exceeded. It might well have been inferred that the absent holder of the incumbrance might not know of a payment which evidently he expected to be made, not to himself, but to the agent he had selected to attend to the matter. In view of all the circumstances under which the subsequent mortgagees acted, we think that the conclusion by them that the required payments as recited in the releases had been made as Porter evidently was expecting them to be made was not an unreasonable or unwarrantable one. The situation as between Porter and a subsequent mortgagee is such that one of these two innocent persons must suffer by the act of Sweatt in releasing the lots without having received the required payments on them. The conclusion is that in the circumstances disclosed it was Porter's conduct, and not any fault or lack of due diligence on the part of the subsequent mortgagees, that enabled Sweatt to occasion the loss. This being true, the loss must fall upon Porter. See Day v. Brenton, 102 Iowa, 482, 71 N. W. 538, 63 Am. St. Rep. 460; Williams v. Jackson, 107 U. S. 478, 2 Sup. Ct. 814, 27 L. Ed. 529; Lennartz v. Quilty, 191 Ill. 174, 60 N. E. 913, 85 Am. St. Rep. 260, 16 Cyc. 773.

We have been referred by the counsel for the petitioner to the following cases as containing rulings sustaining the contention that subsequent purchasers or incumbrancers were not warranted in relying on recorded releases. Hutchings v. Clark, 64 Cal. 228, 30 Pac. 805; Land Co. v. Peck, 112 Ill. 408; Harker v. Scudder, 15 Colo. App. 69, 61 Pac. 197; Murto v. Lemon, 19 Colo. App. 314, 75 Pac. 160. Each of those cases is readily distinguishable in its facts from the one at bar. Besides other material differences between the facts of some of those cases and those of the instant case, in neither of them did it appear, as it does in this case, that the holder of the improperly re-

leased incumbrance had been instrumental in bringing about such a situation as was calculated to lead persons who subsequently dealt with the property to rely on the release and the recitals of it as found on the record.

The petition is denied.

In re COHN et al.

BLUMENTHAL et al. v. STRAT et al.

(Circuit Court of Appeals, Third Circuit. December 1, 1915.)

No. 2009.

1. BANKRUPTCY ⟹89—INVOLUNTARY PROCEEDINGS—ADMISSION OF INABILITY —ANSWER.

While solvency of the debtor is no ground for creditors opposing an adjudication in involuntary bankruptcy, where the act of bankruptcy relied on by the petitioning creditors is the written admission, referred to in the statute (Act July 1, 1898, c. 541, 30 Stat. 544), by the debtor of his inability to pay his debts and of his willingness to be adjudged bankrupt on that ground, yet they may set up that the proceedings are the result of fraud and collusion between the debtor and petitioners.

[Ed. Note.—For other cases, see Bankruptcy, Cent. Dig. §§ 120–122; Dec. Dig. ⟹89.]

2. BANKRUPTCY ⟹89—INVOLUNTARY PROCEEDINGS—ANSWER—FRAUD.

The answer of opposing creditors to petition in involuntary bankruptcy, based on the debtor's written admission of inability to pay debts and consent to adjudication on that ground, *held* not to sufficiently aver fraud and collusion between the debtor and petitioning creditors, of which the proceedings were the result, but to confuse a collusive scheme to benefit by the act (a subject outside the statute) and an unlawful devise in violation of the act, and by its charges, even if sufficiently specified, to do no more than set forth an offense against the bankruptcy law itself, concealment of goods and preferences, with which the trustee is especially equipped to deal.

[Ed. Note.—For other cases, see Bankruptcy, Cent. Dig. §§ 120–122; Dec. Dig. ⟹89.]

Appeal from the District Court of the United States for the Eastern District of Pennsylvania; Oliver B. Dickinson, Judge.

In the matter of Alexander B. Cohn and others, bankrupts. From an order of adjudication on the petition of Jacob Blumenthal and others, answered by Benjamin L. Strat and another, creditors, said answering creditors appeal. Affirmed.

George F. Deiser, of Philadelphia, Pa., for appellants.

Alfred Aarons and Henry N. Wessel, both of Philadelphia, Pa., for appellees.

Before BUFFINGTON, McPHERSON, and WOOLLEY, Circuit Judges.

McPHERSON, Circuit Judge. This was a case of involuntary bankruptcy. The petition averred a written admission of inability to pay debts and a consent to adjudication on that ground. In opposition two creditors appeared and filed an answer, which was pronounced

---

⟹For other cases see same topic & KEY-NUMBER in all Key-Numbered Digests & Indexes

insufficient. (D. C.) 220 Fed. 956. An amended answer was then filed, and this also was overruled in the following unreported opinion (Dickinson, District Judge):

"Counsel for answering creditors had applied for leave to file an amended answer before the order of adjudication had been made. The fact of such application, however, had escaped our attention at the time the adjudication was ordered. Leave is now granted to file the amended answer. With the amended answer before us we now dispose of the case as upon a reargument. As before ruled, the creditors are within their rights in filing an answer to the petition. They are justified in the assertion of this right, if for no other reason than that their promptness and alertness in asserting their position may be shown by the record. The averments of the amended answer, however, do not change the judgment before reached that the adjudication must be ordered and that the rights of the responding creditors are not impaired thereby. The averments of the answer are still short (as under the facts they necessarily must be) of a denial of the averments of the salient facts of the petition. There is a denial by the answer of the insolvency of the alleged bankrupt, but no denial, as there cannot be, of the fact of the admission in writing of their inability to pay their debts, etc. There is also an averment in the answer that the claims of the petitioning creditors are not truly set forth, but no issue raised or tendered that the petitioning creditors are less in number or amount of claims than required by the provisions of the bankruptcy statutes. The averments of the petition, calling as they do, if unanswered, for an order of adjudication, being unanswered, it follows that the order must be made.

"To preserve the regularity of the record of the proceedings, the order [of adjudication] as originally made is vacated, and an order of adjudication now made so as to postdate the filing of the amended answer."

On this appeal no question needs to be discussed, except the sufficiency of the amended answer. It is, of course, agreed that any creditor whose interest may be adversely affected by the decree may oppose an involuntary petition, and where, as here, the dispute is heard on petition and answer, the averments of the answer are to be taken as true. Moreover, the point is settled that the question of solvency or insolvency is immaterial where the act of bankruptcy is the written admission referred to in the statute. West Co. v. Lea, 174 U. S. 590, 19 Sup. Ct. 836, 43 L. Ed. 1098; Re Moench & Sons (C. C. A. 2d Cir.) 130 Fed. 685, 66 C. C. A. 37. But, even if this be the act averred, the opposing creditors may still set up that the proceedings are the result of fraud and collusion between the bankrupt and the petitioners. The opposing creditors may not be able to deny the genuineness of the bankrupt's admission, but certainly they may still assert that even a genuine admission is in aid of a collusive scheme. Accordingly, if the amended answer now before us sufficiently avers fraud and collusion between the bankrupts and the petitioning creditors, a proper issue was tendered that called for disposal. Turning, therefore, to the answer, we find its substance to be as follows:

On information and belief it alleges in the most general terms:

"That the said proceedings are collusive, and are brought by fraudulent collusion between the petitioning creditors and the bankrupt; * * * that the said petition in bankruptcy has been filed for the purpose of defrauding creditors of the said alleged bankrupts."

But, as the need of making these charges specific was evidently recognized, the answer attempts to specify by averring that, although

the bankrupts were and are solvent, they were claiming to be insolvent within four or five weeks before the petition was filed, and were at that time "negotiating with the petitioning creditors for a settlement of their affairs"; averring, further, that notwithstanding these facts the bankrupts bought large stocks of goods in September, October, and November, 1914, while they were claiming to be insolvent, and while they were holding meetings for the settlement of their affairs. The answer goes on to set forth, on information and belief, that:

"Certain of the petitioning creditors have an understanding" (without stating with whom the understanding exists) "by which, if all creditors accept 20 per cent. of their claims in full settlement thereof, that the said petitioning creditors will *withdraw their own claims*" (without explaining what is meant by the phrase we have italicized).

The averment follows that:

"Some of the petitioning creditors have set forth claims for amounts less than is really due to the said creditors with a view to maintaining securities or private settlements which they have privately made with the bankrupts" (without averring that the bankrupts were party to such statements, and without explaining how such action by the petitioning creditors could advance a scheme to begin a fraudulent proceeding).

The charge just quoted is repeated in another form:

That the same creditors "have filed claims for less than the amount actually due for the purpose of obtaining unlawful preferences" (which, if true, would merely expose these creditors to the risk of having their preferences set aside by the trustee).

And, finally, the general charge is made:

"That the said alleged bankrupts have bought large stocks of goods, claiming at the time that they were insolvent."

This is a summary of the answer, and we think no further discussion is needed. However benevolently such charges may be regarded, it seems to us that these are too vague and indefinite to require investigation. Even if sufficiently specified, they do no more than set forth offenses against the bankruptcy law itself—concealment of goods and preferences—with which the trustee is specially equipped to deal. The answer appears to confuse two distinct subjects—a collusive scheme to benefit by the act (a subject outside of the statute), and an unlawful device in violation of the act—and is fatally defective.

For this reason the order complained of was right and is hereby affirmed.

FIRST STATE BANK OF KERRVILLE, TEX., v. LOWRY et al.

In re J. Q. WHEELER & SON.

(Circuit Court of Appeals, Fifth Circuit. November 11, 1915.)

No. 2764.

EVIDENCE ⟹314—HEARSAY—TESTIMONY AS TO STATEMENT OF THIRD PERSON.

In an action by a trustee in bankruptcy to recover as a voidable preference property transferred by the bankrupt within four months to defendant bank as security for an antecedent indebtedness, testimony as to a statement said to have been made by the bankrupt subsequent to the transfer, but which he denied, to the effect that he had told defendant that he was insolvent, was hearsay, and its admission was prejudicial error.

[Ed. Note.—For other cases, see Evidence, Cent. Dig. §§ 1168–1173; Dec. Dig. ⟹314.]

In Error to the District Court of the United States for the Western District of Texas; Thomas S. Maxey, Judge.

Action at law by C. L. Lowry, trustee of the estate of J. Q. Wheeler & Son, bankrupts, against the First State Bank of Kerrville, Tex. Judgment for plaintiff, and defendant brings error. Reversed.

J. R. Burnett, of Kerrville, Tex., for plaintiff in error.

H. C. Geddie, of Kerrville, Tex. (U. F. Short, of Dallas, Tex., on the brief), for defendants in error.

Before PARDEE and WALKER, Circuit Judges, and SPEER, District Judge.

WALKER, Circuit Judge. This was an action by the defendant in error, suing as the trustee of J. Q. Wheeler & Son, bankrupts, to recover of the plaintiff in error the value of certain personal property alleged to have been transferred to it as security by the bankrupts within four months before the filing of the petition in bankruptcy. The petition in the case alleged that when the transfer was made the defendant knew or had reasonable cause to believe that the transferrors were insolvent, and that the effect of the enforcement of the transfer would be to enable the defendant to obtain a greater percentage of its debt than any other creditor of the same class. The allegations of the petition to the above-stated effect were duly put in issue.

It appears from the record that the transfer of collateral by the bankrupts to the defendant which was attacked as a voidable preference was made on September 8, 1913. On the trial, one of the bankrupts, J. Q. Wheeler, was examined as a witness for the plaintiff, and in the course of his examination was asked by the plaintiff's counsel if he had told Moore and Ellis, on October 21st, or 22d, that his son Charles, who left Kerrville September 4th, took all the money he had and had ruined him and the business, and that he was "busted," and so told the officers of the defendant bank. In response to this question the witness testified that he made no such statement

and had no such conversation. Over objections duly made by the defendant, Moore and Ellis, as witnesses for the plaintiff, were permitted to testify that on October 21 or 22, 1913, they had such conversations with J. Q. Wheeler, and that Wheeler stated to them that when his son went away he took all the money, and that he went to the defendant bank and told it that he was "busted." The testimony so admitted was objected to as hearsay, and also on the ground that the plaintiff could not impeach his own witness. Exceptions were duly reserved to the action of the court in overruling the objections made and permitting the introduction of the above-mentioned testimony of Moore and Ellis.

There is nothing in the record to indicate that the testimony was admissible under any recognized exception to the general rule which forbids the impeachment of a witness by the party who introduced him. A statement made by the presiding judge when the ruling was announced showed that the testimony was not admitted for the purpose of enabling the party offering it to impeach his own witness, and that it was regarded as admissible on the issue of insolvency of Wheeler & Son at the time of the alleged preference. The obviously prejudicial effect of the ruling was in its letting in hearsay testimony as evidence of a fact which was material under the issues in the case. One of the issues was as to the defendant having or not having knowledge or notice of the insolvent condition of J. Q. Wheeler & Son when they made the assailed transfer to the defendant on September 8, 1913. The effect of the ruling was to let in as evidence of such knowledge or notice the fact that in October J. Q. Wheeler said to third persons, in effect, that before the transfer was made he informed the defendant bank of his firm's insolvent condition. This statement, subsequently made by one of the transferrors to third persons, no representative of the transferee being present, was, as to the latter, mere hearsay. It cannot be affirmed that the hearsay testimony so admitted did not have weight with the jury in leading it to the conclusion evidenced by the verdict, as there is nothing in the record to forbid the conclusion that the finding that the defendant bank, at the time the assailed transfer to it was made, knew or had reasonable cause to believe that the firm making the transfer was insolvent was not based, in whole or in part, on the testimony of Moore and Ellis as to what J. Q. Wheeler said to them some time after the transfer was made. A material fact was not properly provable against the transferee by testimony as to unsworn statements subsequently made by a transferror to third persons, no representative of the transferee being present or in any way acquiescing in the truth of the statements. The conclusion is that the effect of the ruling was to let in inadmissible hearsay evidence which was prejudicial to the defendant, and that the action of the court in overruling the objections made to that evidence was reversible error.

Other rulings are presented for review. Further mention of them is not deemed necessary, as the questions involved are such that they are not likely to arise in another trial.

For the error above pointed out, the judgment is reversed.

BACKUS, Commissioner of Immigration, v. YEP KIM YUEN.

(Circuit Court of Appeals, Ninth Circuit. October 11, 1915.)

No. 2562.

HABEAS CORPUS ⟹113—APPEAL—APPEALABLE ORDER.

Appeal will not lie from the order overruling a demurrer to the petition for habeas corpus, but only from the order discharging from custody.

[Ed. Note.—For other cases, see Habeas Corpus, Cent. Dig. §§ 102–115; Dec. Dig. ⟹113; Appeal and Error, Cent. Dig. §§ 150, 364, 461.]

Appeal from the District Court of the United States for the First Division of the Northern District of California; Maurice T. Dooling, Judge.

Habeas corpus by Yep Lung Gon, on behalf of Yep Kim Yuen, against Samuel W. Backus, as Commissioner of Immigration at the Port of San Francisco. From an adverse order, respondent appeals. Appeal dismissed.

The petitioner, Yep Lung Gon, alleges that he was born in the United States and is a citizen thereof; that such citizenship has been judicially determined by a judgment of the District Court of the United States for the District of California, in the matter of Yep Lung Gon (No. 90,071), made and entered on the 9th day of January, 1890; that Yep Kim Yuen, in whose behalf the petition is made, is the minor son of petitioner, and is a citizen of the United States; that he is unlawfully imprisoned and restrained of his liberty by the Commissioner of Immigration at the port of San Francisco, and is about to be deported from the United States to China; that he arrived at the port of San Francisco by steamer from China in the month of September, 1913, and made application to the Commissioner of Immigration to be admitted into the United States as a citizen thereof, and as the minor son of the petitioner; that he was given a hearing by the immigration authorities touching his right to enter the United States as a citizen thereof, and as the minor son of petitioner; that upon said hearing testimony was submitted bearing on the question of his parentage, and testimony and documentary evidence were submitted bearing upon the question of his citizenship; that thereupon the Commissioner found that the appellee was not the son of petitioner, and was not a citizen of the United States by reason of such alleged paternity of petitioner. Upon such finding the Commissioner of Immigration denied Yep Kim Yuen the right of admission into the United States; that thereupon an appeal on behalf of Yep Kim Yuen was taken to the Secretary of Commerce and Labor; the petition alleges, on information and belief, that the Secretary of Commerce and Labor reversed the decision of the Commissioner of Immigration in the finding that Yep Kim Yuen was not the son of petitioner, and instructed the Commissioner to investigate the identity of the petitioner, Yep Lung Gon, and find out and determine whether he was the same person who was judicially determined by the judgment of the District Court to be a citizen of the United States; that thereupon the Commissioner of Immigration did investigate the identity of the petitioner, and did find and determine that he was the same person who had been judicially determined to be a citizen of the United States, and said Commissioner reduced such investigation to writing and forwarded the record of the same to the Secretary of Labor (who had become, under the law, the successor of the Secretary of Commerce and Labor); that said record clearly established the right of Yep Kim Yuen to enter the United States and to reside therein; that the petitioner is informed and believes, and therefore alleges the fact to be, that the Secretary of Labor refused, failed, and neglected to consider the testimony and the evidence contained in such record and

the findings and determination of said Commissioner of Immigration, but did without reason consider other matters which were never incorporated in any record made or produced at the port of San Francisco, the exact nature of which matters is unknown to the petitioner and to said Yep Kim Yuen, and that neither of them had or were given an opportunity to rebut, deny, explain, or overcome such matters; that thereafter the Secretary of Labor denied the said Yep Kim Yuen the right to enter the United States, and ordered the said Commissioner to deport the said Yep Kim Yuen to China; that, the said petitioner and Yep Kim Yuen having exhausted their said remedies before the Secretary of the Department of Labor, the petitioner, on behalf of the said Yep Kim Yuen, applied to the District Court of the United States for the writ of habeas corpus involved in this opinion. To the petition for the writ the government interposed a demurrer, on the ground that the petition did not state facts sufficient to entitle the petitioner to the writ. There was a hearing before the court on the demurrer on April 1, 1914, and on that date the demurrer was overruled, and the writ of habeas corpus was issued as prayed for. Thereafter, on April 14, 1915, Yep Kim Yuen was produced in court, but no return was made to the writ by the officer having him in custody, and no answer by way of traverse, denial, or otherwise was made with respect to the allegations of the petition. Thereupon the court discharged Yep Kim Yuen from the custody, and the government took the present appeal.

John W. Preston, U. S. Atty., and Casper A. Ornbaum, Asst. U. S. Atty., both of San Francisco, Cal., for appellant.

Catlin, Catlin & Friedman and Lucius L. Solomons, all of San Francisco, Cal., for appellee.

Before GILBERT, ROSS, and MORROW, Circuit Judges.

MORROW, Circuit Judge (after stating the facts as above). It appears from a statement contained in the briefs that upon the submission of the demurrer to the court below the attorney for the government handed to the court certain documents and memoranda of the Bureau of Immigration relating to this case. These documents and memoranda are not in the present record, and what relevancy they had to the question raised by the demurrer does not appear; but the appellant seeks to have this appeal determined, not upon the sufficiency of the petition, but upon recitals contained in these documents and memoranda. The petition for appeal to this court is from the order of the District Court of April 1, 1914, overruling the demurrer to the petition for writ of habeas corpus and granting the petition for the writ. The order of the court allowing the appeal recites that it is an appeal as "prayed for," and the notice of appeal served upon the appellee is an appeal "from the order and judgment rendered, made and entered herein on the 1st day of April, 1914, overruling the demurrer to the petition for writ of habeas corpus filed herein." There is no appeal from the order of the court discharging Yep Kim Yuen from custody, which is the only order and judgment from which an appeal would lie in this case.

The appeal is accordingly dismissed.

FISHEL v. FISHEL.

(Circuit Court of Appeals, Eighth Circuit. November 15, 1915.)

No. 4421.

CONTRACTS ⟹28, 322—EXISTENCE AND PERFORMANCE—EVIDENCE.

Evidence *held* insufficient to show that a father agreed, if his son would engage in a business, he would give it to him, or that the oral agreement had been performed, but rather to show that the father retained the business.

[Ed. Note.—For other cases, see Contracts, Cent. Dig. §§ 133–140, 1306, 1307, 1339, 1347, 1348, 1465, 1492, 1534–1542, 1754, 1755, 1768, 1772, 1782–1784, 1785½, 1801, 1802, 1804–1808, 1815, 1816, 1820, 1821; Dec. Dig. ⟹28, 322.]

Appeal from the District Court of the United States for the District of Colorado; Robert E. Lewis and John A. Riner, Judges.

Bill by Edwin D. Fishel against the Fishel Real Estate Company, Gilbert B. Fishel, and Arthur A. Fishel. Gilbert B. Fishel filed a cross-bill, which was answered by Arthur A. Fishel alone. From the decree, Gilbert B. Fishel appeals. Affirmed.

Harvey Riddell, of Denver, Colo., for appellant.

Thomas Ward, Jr., of Denver, Colo. (Robert Collier, of Denver, Colo., on the brief), for appellee.

Before CARLAND, Circuit Judge, and AMIDON and VAN VALKENBURGH, District Judges.

CARLAND, Circuit Judge. This is a bill by Edwin D. Fishel against the Fishel Real Estate Company, Gilbert B. Fishel, individually and as secretary of said company, and Arthur A. Fishel. The general purpose of the bill was to have it adjudicated that said Edwin D. Fishel was the owner of 340 shares of the capital stock of the Real Estate Company. Gilbert B. Fishel filed a cross-bill against Edwin D. Fishel, Arthur A. Fishel, and the Fishel Real Estate Company, wherein on account of the matters alleged therein he prayed that it be adjudged either that he was the owner of said shares of stock or a one-half interest therein, as the court should determine. Arthur A. Fishel alone answered the cross-bill. The court upon the pleadings and proofs decided that Edwin D. Fishel had no interest in the stock in question and dismissed the bill. On the cross-bill it decided that Gilbert B. Fishel and Arthur A. Fishel owned the stock in the proportion of one-half each, and made an appropriate decree to that effect. Gilbert B. Fishel alone appealed from the decree in so far as it adjudged Arthur A. Fishel to be the owner of a one-half interest in the stock.

The only question before us, therefore, is as to whether appellant Gilbert B. Fishel owns all the stock, or only a half interest therein. The Real Estate Company owns a building in the city of Denver, wherein the dry goods business of Fishel, Cohn & Wise, Fishel Bros. & Wise, and G. B. Fishel & Co. has been carried on since 1880. The Real Estate Company was incorporated simply as a

holding company, to hold the title to the real estate upon which the store building is located. Jonas Fishel, the father of Arthur A. Fishel and Gilbert B. Fishel, died March 19, 1909, leaving a will executed June 29, 1900, whereby he left the stock in question to Gilbert and Arthur in equal parts. The claim of Gilbert to be the owner of all the stock is based upon a conversation which he claims he had with his father in September, 1879, when Gilbert was but 17 years of age. He testifies that at the time stated his father, Jonas Fishel, wanted him to go to Denver and become associated with the business which his father was to establish at that place, and that the moneys which his father should put into the business should belong to Gilbert as a start in life; that Gilbert, although reluctant so to do, finally consented, and came to Denver, and has remained there ever since in charge of the business. The only testimony in the record which tends to support this verbal promise of Jonas to his son Gilbert is that of George H. Clyne. Performance of the oral agreement is relied upon to satisfy the statute of frauds.

We cannot state in this opinion the evidence of these two witnesses at length, or give a very extended account of the same. It is sufficient to say, however, that we have carefully examined the whole testimony as it appears in the record, and we cannot reach a conclusion that any contract was ever entered into between Jonas Fishel and his son Gilbert that would in any degree overturn the acts and statements of Jonas Fishel from the time of the purchase of the property in Denver in 1879 until the time of his death in 1909, ending with a solemn written instrument devising this stock to the two boys in equal proportion.

We therefore agree entirely with the trial court as to the judgment which should be entered, and therefore direct that the judgment below be affirmed.

WALKER v. TERRITORY OF NEW MEXICO.

(Circuit Court of Appeals, Eighth Circuit. November 4, 1915.)

No. 3778.

1. CRIMINAL LAW ⚷935—APPEAL—MOTION FOR NEW TRIAL.

Under the practice in the territory of New Mexico, the question that there was no evidence of the ownership of the animal alleged to have been stolen could be raised by motion for new trial.

[Ed. Note.—For other cases, see Criminal Law, Cent. Dig. §§ 2193, 2194, 2297, 2298, 3068; Dec. Dig. ⚷935.]

2. LARCENY ⚷40—INDICTMENT—AVERMENTS—MATERIALITY.

An indictment charging larceny of a calf alleged that it was the property of a live stock company, a corporation. The articles of incorporation showed that they were filed in 1908. The certificate of brand, which was the only evidence as to the ownership of the animal, showed that it was recorded in 1899. *Held* that, as the averment that the owner of the calf was a corporation was material, the certificate was inadmissible, it hav-

ing been recorded before the corporation came into existence, and hence there was no evidence of ownership.

[Ed. Note.—For other cases, see Larceny, Cent. Dig. §§ 102–126, 160; Dec. Dig. ⟹40.]

In Error to the Supreme Court of the Territory of New Mexico.

Jim Walker was convicted of larceny, and, the conviction being affirmed by the Supreme Court of the territory, he brings error. Reversed and remanded.

W. W. Gatewood, of Roswell, N. M., for plaintiff in error.

Frank W. Clancy, Atty. Gen. of New Mexico, for the Territory.

Before SANBORN and CARLAND, Circuit Judges, and LEWIS, District Judge.

CARLAND, Circuit Judge. Plaintiff in error, hereafter called the defendant was indicted in the county of Chaves, territory of New Mexico, for the larceny of one neat cattle, of the value of $10 of the property of the El Capitan Live Stock Company, a corporation, and was convicted and sentenced from one to two years in the penitentiary. This judgment was affirmed by the Supreme Court of the territory, and the case is now here on writ of error.

It is assigned as error that the Supreme Court erred in not holding that the action of the trial court in overruling defendant's motion for a continuance did not constitute reversible error. We think the record presents a very close question upon this point, but as the case must be reversed upon another ground we pass the question, as it will not probably occur again.

[1] It is assigned as error that the Supreme Court erred in holding that the action of the trial court in admitting in evidence over the objections of defendant the certificate of brand offered by the territory to prove the ownership of the calf alleged to have been stolen from the El Capitan Live Stock Company, a corporation, did not constitute reversible error. There is a claim made that no proper exception was taken to the offer of the brand certificate as would justify the present attack upon it. The question that there was no evidence of the ownership of the calf alleged to have been stolen was, however, properly raised by motion for a new trial. Under the practice in the territory, it was permissible to raise this question on motion for a new trial, and the same, having been considered by the Supreme Court, is properly before us.

[2] The indictment alleged specifically that the calf alleged to have been stolen was the property of the El Capitan Live Stock Company, a corporation. Counsel for the territory, in order to prove the allegation of the indictment that the Live Stock Company was a corporation, introduced the articles of incorporation of said company, duly certified by the secretary of the territory, and it appeared therefrom that they were acknowledged by the incorporators on the 21st, 22d and 26th days of December, 1908, and that they were filed in the office of the secretary of the territory December 28, 1908. The certificate of brand introduced in evidence over the objection of counsel for defendant showed that it was recorded in the Territorial Brand Book, No. 4,

page 13, July 2, 1899, nearly 10 years before the El Capitan Live Stock Company, a corporation, was organized. There was evidence that the cow which the calf alleged to have been stolen was sucking had on what is known as the block brand, but we think the evidence wholly fails to show that the El Capitan Live Stock Company, a corporation, had or owned any such brand.

We think the weight of authority is in favor of the proposition that, when the prosecutor in the case at bar alleged that the Live Stock Company was a corporation, he made that fact material. 1 Bishop, New Crim. §.488B, and cases cited. When the proof of incorporation, however, was offered, it showed that the El Capitan Live Stock Company, a corporation, could not have been the owner of the brand filed for record in 1899. With the brand out of the case, the evidence of the territory failed to show the ownership of the calf alleged to have been stolen, and we think the Supreme Court erred in not reversing the judgment below.

For the reasons above stated, the judgment of the Supreme Court and the judgment of the district court in and for Chaves county, N. M., are reversed, and the case is remanded, with instructions to grant a new trial.

In re PECHIN.

(Circuit Court of Appeals, Third Circuit. December 2, 1915.)

No. 1994.

BANKRUPTCY ⟹439—ADMINISTRATION—INTERLOCUTORY ORDERS—REVIEW.

An order of the District Court allowing the trustee to amend his specifications of objection to discharge of bankrupts, nothing more being done, has not that degree of finality necessary for review, as the trustee may abandon, or be unable to prove, the amendment.

[Ed. Note.—For other cases, see Bankruptcy, Cent. Dig. § 915; Dec. Dig. ⟹439.

Appeal and review in bankruptcy cases, see note to In re Eggert, 43 C. C. A. 9.]

Petition for Revision of Order of the District Court of the United States for the Eastern District of Pennsylvania; Oliver B. Dickinson, Judge.

In the matter of John W. Pechin, bankrupt. Petition by bankrupt to revise order of the District Court (225 Fed. 798). Petition dismissed.

Joseph H. Brinton, of Philadelphia, Pa., for petitioner.

Edward Hopkinson, Jr., and Daniel R. Rothermel, both of Philadelphia, Pa., for respondent.

Before BUFFINGTON, McPHERSON, and WOOLLEY, Circuit Judges.

McPHERSON, Circuit Judge. The facts in this case are as follows: The bankrupt presented his petition for discharge, and on No-

vember 2, 1914 (which was in due season), the trustee filed specifications of objection. One of these sets forth that the bankrupt had knowingly and fraudulently obtained money and credit from the Republic Trust Company upon materially false statements in writing made in January, 1909, and February, 1910. On April 12, 1915, the trustee was informed for the first time that similar statements had been made in March, 1913, to a creditor in England, and promptly applied to the District Court for permission to amend the foregoing specification by adding the facts relating to the transaction in England. The District Court granted leave to amend (225 Fed. 798), and the bankrupt asks us to revise the order.

In our opinion the petition to revise is premature, because the order complained of is not at present the subject of such a petition. There must be a certain degree of finality about these administrative orders before they can be reviewed; if every order were reviewable, proceedings could easily be so tied up and prolonged that the situation would become intolerable. But where a fairly separable subject has been finally disposed of, so that rights have been definitely determined, and practically nothing remains to be done in that respect, such a subject is ready for review. To confine ourselves to the matter in hand; if the District Court should refuse to allow a specification to be filed, or to be amended, such an order has sufficient finality, and may be reviewed. Re Carley (C. C. A. 3d Circ.) 117 Fed. 130, 55 C. C. A. 146; Goodman v. Curtis (C. C. A. 5th Circ.) 174 Fed. 644, 98 C. C. A. 398. But what was done here was not the end of an inquiry, but the beginning. To use Judge Gray's language in Re Carley, "Specifications are in the nature of a declaration," and a declaration is, of course, almost the first stage in a suit. If a declaration be demurred to, and the suit be dismissed, this is a final decision against the plaintiff's claim, and may be reviewed; but if the demurrer be overruled, no final judgment has been given, and the suit must go on. No doubt a defendant may sometimes suffer inconvenience by being compelled to answer an unfounded claim; but inconveniences cannot always be avoided, and on the whole these are less harmful than the delays that would be sure to follow if suitors were allowed to appeal from every order they did not like. An analogous situation was presented in Re Chotiner (C. C. A. 3d Circ.) 218 Fed. 813, 134 C. C. A. 501.

In the present case the trustee may abandon the amendment complained of, or he may not be able to prove it, and in either event the bankrupt will take no harm, except the trouble of being compelled to prepare a defense; and such trouble is inseparable from all legal proceedings. We express no opinion about the reasons given by the District court. All we need say is that the petition is premature and for that reason is dismissed.

WRIGHT v. UNITED STATES.

(Circuit Court of Appeals, Eighth Circuit. November 13, 1915.)

No. 4318.

(Syllabus by the Court.)

CRIMINAL LAW ⟹308, 562—INDIANS ⟹38—INTOXICATING LIQUORS—PRESUMPTION OF INNOCENCE.

There is a legal presumption that a defendant is innocent in a criminal case until he is proved to be guilty beyond a reasonable doubt. The burden is upon the government to make this proof, and evidence that is as consistent with innocence as with guilt is insufficient to sustain a conviction. Unless there is substantial evidence of facts which exclude every other hypothesis but that of guilt, it is the duty of the trial court to instruct the jury to return a verdict for the accused; and when all the substantial evidence is as consistent with innocence as with guilt, it is the duty of the appellate court to reverse a judgment of conviction. The record considered, and *held* to contain no substantial evidence of the guilt of the defendant below.

[Ed. Note.—For other cases, see Criminal Law, Cent. Dig. §§ 731, 1253, 1263; Dec. Dig. ⟹308, 562; Indians, Cent. Dig. §§ 22, 64, 66; Dec. Dig. ⟹38.]

Carland, Circuit Judge, dissenting in part.

In Error to the District Court of the United States for the Eastern District of Oklahoma; Ralph E. Campbell, Judge.

Arch Wright was convicted of introducing liquor into the Eastern district of Oklahoma and brings error. Reversed and remanded, with directions to grant a new trial.

Norman R. Haskell, of Oklahoma City, Okl. (W. J. Crump and G. J. Crump, both of Muskogee, Okl., and E. G. McAdams, of Oklahoma City, Okl., on the brief), for plaintiff in error.

W. P. McGinnis, Asst. U. S. Atty., of Muskogee, Okl. (D. H. Linebaugh, U. S. Atty., of Muskogee, Okl., on the brief), for the United States.

Before SANBORN and CARLAND, Circuit Judges, and LEWIS, District Judge.

SANBORN, Circuit Judge. The plaintiff in error was indicted for introducing intoxicating liquor into the Eastern district of Oklahoma, into the county of Muskogee in that district, which the indictment alleged had been a part of the Indian Territory and was a portion of the Indian country of the United States, from without the Indian country, from without the said district, and from without the said state of Oklahoma. The indictment seems, therefore, to charge in a single count the introduction of intoxicating liquor from without the state of Oklahoma into that part of the state which was formerly the Indian Territory, in violation of section 8 of the Act of March 1, 1895 (28 Stat. 693), and the introduction of intoxicating liquor into the Indian Territory in violation of the Act of January 30, 1897, 29 Stat. 506 (Comp. St. 1913, § 4137), two distinct offenses. Ammerman v. United States, 216 Fed. 326, 132 C. C. A. 470; Allison v. United States, 216 Fed. 329, 132 C. C. A. 473. The defendant did not demur

to the indictment, but pleaded not guilty; then at the opening of the trial moved for leave to withdraw his plea and to demur, a motion which was denied; and then objected to any evidence on the ground that the indictment was duplicitous, but his objection was overruled. At the close of all the evidence he made a motion for a peremptory instruction in his favor, which was denied, and the court instructed the jury that there was no evidence that the portion of Muskogee county where the liquor was found was or is Indian country, that they must not find the defendant guilty of a violation of the Act of January 30, 1897, but that they might consider and find whether or not he was guilty of a violation of the Act of March 1, 1895. These and many other rulings of the court at the trial of this case are assigned as error; but it is necessary to consider but one of them in order to dispose of it, and that is whether or not the request for a peremptory instruction should have been given.

There was evidence, much of which is challenged as incompetent, a challenge we do not stop to determine, and do not admit or deny the soundness of, that Petroleum is a railway station in Oklahoma, about three miles from Muskogee; that some unknown person presented to the cashier of the railroad company at Ft. Smith, Ark., a bill of lading of M., K. & T. car No. 72837, which appeared from the bill of lading to be loaded with cotton seed hulls and to be shipped by the Ft. Smith Cotton Oil Company to W. D. Todd, at Petroleum; that the cashier accepted prepayment of the freight and billed the car to Petroleum, where it arrived on July 12, 1912, at about 8 p. m.; that an hour or two after dark on that day men with teams arrived at Petroleum, took intoxicating liquor from the car, and hauled it toward Muskogee; and that on the way the sheriff of Muskogee county captured the liquor. There was no direct evidence that Wright, the defendant below, owned the liquor, that he had ordered or requested its introduction into Oklahoma, or that he had directed, superintended, or was in any way interested in unloading or hauling it into Muskogee. He testified that, at the time the car was unloaded and the liquor was drawn towards Muskogee, he was at his residence in that city with W. L. Stokes, another witness, who testified that he was at Wright's house discussing a matter of business with him at that time. Wright further testified that he had nothing to do with introducing the liquor, that he was not interested in it, that he did not go out to the car that night, and did not pass Ed. Mahoney, a deputy sheriff, who testified that as he was going out to the car that night he met Wright on the road, walking towards Muskogee, and he said, "Is anything doing down there?" and Mahoney answered, "Hello, Arch."

The only evidence there is in the record from which a suspicion might possibly arise that Wright was in any way interested in the introduction of the liquor is this: Hewett testified that while the men were unloading the car there was a medium sized man, whom he did not know, dressed in a dark blue suit of clothes, wearing a straw hat, sitting in a buggy about 50 feet from the car, and that when the light flashed up the lane he left the buggy and went out across the field. Ed. Mahoney testified that, as he was riding from Muskogee toward Petroleum, he met Wright walking towards Muskogee; that he was

dressed in a light-colored suit of clothes, and was wearing a straw hat; that he knew Wright; that he was engaged in running joints; that joints were whisky and gambling; that after Wright was indicted he took Mahoney into the sheriff's office and asked the sheriff if he expected to work with the government, and asked Mahoney why he was so anxious to go before the grand jury and to file this case against him; and that at another time later Wright asked him about what his testimony would be, whether or not he was sure the man he met on the road was Wright, how far he was from him, and what he said. But was this substantial evidence that Wright introduced or caused the introduction of the liquor unloaded from the car from without the state of Oklahoma into the part of that state which was formerly the Indian Territory?

Conceding the truth of this testimony for the government, it discloses no act or word of Wright tending to show that he introduced or caused the introduction of the liquor from Arkansas into Oklahoma. The legal presumption was that he was innocent of that crime until he was proved to be guilty beyond a reasonable doubt. The burden was upon the government to make this proof, and evidence that is as consistent with innocence as with guilt is insufficient to sustain a conviction. Unless there is substantial evidence of facts which exclude every other hypothesis but that of guilt, it is the duty of the trial court to instruct the jury to return a verdict for the accused; and where all the substantial evidence is as consistent with innocence as with guilt, it is the duty of the appellate court to reverse a judgment of conviction. Union Pacific Coal Co. v. United States, 173 Fed. 737, 740, 97 C. C. A. 578, 581; Vernon v. United States, 146 Fed. 121, 123, 124, 76 C. C. A. 547, 549, 550; United States v. Richards (D. C.) 149 Fed. 443, 454; Hayes v. United States, 169 Fed. 101, 103, 94 C. C. A. 449, 451; United States v. Hart (D. C.) 78 Fed. 868, 873; Hart v. United States, 84 Fed. 799, 28 C. C. A. 612; United States v. McKenzie (D. C.) 35 Fed. 826, 827, 828; People v. Ward, 105 Cal. 335, 341, 38 Pac. 945; People v. Murray, 41 Cal. 66, 67; State v. Hunter, 50 Kan. 302, 32 Pac. 37; Bradshaw v. State, 17 Neb. 147, 22 N. W. 361, 366.

The government proved that an unknown man at Ft. Smith, Ark., prepaid the freight on the carload of liquor and caused it to be billed and sent from Arkansas into Oklahoma. It produced no evidence that this unknown man was Wright, or that he acted by Wright's order, direction, or procurement; and as there were many other men than Wright, while he is but one, the fact that this unknown man caused the introduction is much more consistent with Wright's innocence than with his guilt. The man whom Hewett saw in the buggy at Petroleum was wearing a dark blue suit of clothes and a straw hat; Wright, whom Mahoney met walking towards Muskogee, was wearing a light-colored suit of clothes and a straw hat; and the fact that the man in the buggy was not Wright is more consistent with this testimony than the hypothesis that he was. The fact that Wright was walking along the road toward his home in the evening of the day when the liquor was captured is much more consistent with the hypothesis that he did not cause the liquor to be introduced from Arkansas into Oklahoma, and the unknown man did, than it is with the hypothesis that Wright

caused its introduction. The fact that he ran joints is at least as consistent with his innocence as with his guilt, for there were doubtless more men engaged in running joints in Muskogee, who did not introduce the liquor in the car in question into Oklahoma, than there were who did. And the conversations Wright had with the sheriff and Mahoney after he was indicted were as consistent with his innocence as with his guilt. Innocent men are not less anxious than guilty ones to learn before their trial what evidence and what influence is to be brought to convict them, and they may not be lawfully deterred from endeavoring to ascertain by a rule that such endeavors constitute proof of their guilt beyond a reasonable doubt. There was no substantial evidence in this case which was not as consistent with the innocence as with the guilt of the defendant below, and his request for a peremptory instruction in his favor should have been granted.

The judgment below must therefore be reversed, and the case must be remanded to the court below with instructions to grant a new trial; and it is so ordered.

CARLAND, Circuit Judge. I concur in the result, but for reasons stated in my dissent in No. 4279, Isbell v. United States, 227 Fed. 788, —— C. C. A. ——, I dissent from the use of the language used in the opinion in the case mentioned.

UNION SPECIAL MACH. CO. v. SINGER MFG. CO.

(Circuit Court of Appeals, Third Circuit. September 2, 1915.)

No. 1861.

PATENTS ⟹328—VALIDITY AND INFRINGEMENT—SEWING MACHINE.

The Woodward patent No. 890,582, for a sewing machine adapted for sewing the heel seams of shoes, which makes both a straight-away and a zigzag or overedge seam, with means for shifting from one to the other at the will of the operator while the machine is in motion, but having a stop mechanism carried by a moving part of the machine, which prevents the complete movement of the shifting mechanism until the needle has reached a predetermined position above the leather, where it will not be injured by the change in direction of the movement, discloses invention of merit, and with the exception of one claim is not limited to mechanism which stops the shifting movement when the needle is at a particular designated point; also held infringed by the machine of the Gray patent, No. 933,032.

Appeal from the District Court of the United States for the District of New Jersey; Edward G. Bradford, Judge.

Suit in equity by the Union Special Machine Company against the Singer Manufacturing Company. Decree for defendant, and complainant appeals. Reversed.

For opinion below, see 215 Fed. 598.

Joseph C. Fraley, of Philadelphia, Pa. (C. L. Sturtevant and E. G. Mason, both of Washington, D. C., on the brief), for appellant.

Gifford & Bull, of New York City, for appellee.

Before BUFFINGTON, McPHERSON, and WOOLLEY, Circuit Judges.

BUFFINGTON, Circuit Judge. In the court below the Union Special Machine Company, owner of patent 890,582, granted June 9, 1908, to R. G. Woodward, for a sewing machine, filed a bill against the Singer Manufacturing Company, charging it with infringement. On final hearing that court, in an opinion reported at 215 Fed. 598, held such infringement had not been shown. From a decree dismissing the bill plaintiff took this appeal. The art in question involves high-speed power sewing machines. It is exceedingly complicated, and this fact, together with the further one that we are constrained to differ from the conclusion reached in the very full opinion of the learned judge who decided the case below, must be the warrant for the length of this opinion.

The sewing machines made by both parties are used in the shoe making, both for fancy stitch or ornamental sewing, and also for fastening the seams of a shoe together. As an example of the extent to which the sewing machine was used for ornamental shoe sewing and leather stitching, the machine of Hart & Hills may be cited as representing the best known in the art. This arises from the fact that it was patented as far back as 1888, was marketed by such great companies as the Wheeler & Wilson, and subsequently by the Singer Company, which absorbed that company. This Hart & Hills machine not only represents the highest mechanical efficiency in the art of ornamental stitching, but it also is the nearest alleged approach the art had developed to the machine here in controversy. Its working and capacity in the field of ornamental stitching may be best pointed out from the specification, aided by the accompanying drawing, which constitutes Figure 6 of Hart & Hills patent No. 406,277.

It will be noted that this machine first sews a straight line of stitches, and then turns into sewing a number of such stitches in zigzag form. In that regard the patent says:

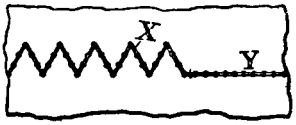

"The object of our invention is to provide novel means for operating the vibrating frame, stopping and starting its vibrations at will, and making a straight line of stitches, or a zigzagged line of stitches, or alternating straight and zigzagged lines of stitches, as may be desired."

It will be noted each leg of the triangle is made up of a number of stitches, and as the number of such stitches in each leg of the V had to be uniform the machine was so constructed that the mechanism to change the direction of the stitch only became effective when the required number of stitches had been made in such leg. Moreover, the machine was also used at moderate speed; the patent stating:

"By this arrangement it will be seen that a comparatively slow intermittent reciprocating motion is imparted to the needle crosswise to the line of feed while the needle is above the work, so as to produce the zigzag line of stitches shown at *X* in Figure 6."

This machine, with its capacity for straight and zigzag ornamental pattern work, was widely known and used in the art; but no one, during the 17 years following the grant of the patent, seemed to have either used it, or indeed to have conceived of its use, in the seam-sewing

branch of the art. In that branch of shoe manufacture it had long been customary to unite the two parts of the shoe upper at the back, and thus form the heel by superimposing the two pieces of leather, with their edges flush, and sew them together with an ordinary straight-away seam a short distance back from the edge. When the united pieces were spread out as shown in the accompanying sketch a ridge was formed which, while not objectionable near the top, was highly objectionable when pressing against a wearer's heel. The practice, therefore, was to subject the ridge to heavy pressure, which involved rehandling and expense, and did not wholly do away with the ridge. About 1898 an employé of a shoe factory at the North Star Shoe Company in Minneapolis began the practice of making a seam by the successive use of two machines well known in the art. He first sewed the upper part of the heel seam on a regular straight-away machine, and then transferred the upper to a regular overedge machine, which made a hinge-shaped joint. The result is shown in the accompanying sketch, in which, when the two pieces are spread out, it will be seen the curved overedged part opens out on a hinge and leaves no seam, as shown, for instance, in the accompanying sketch, on a flat surface.

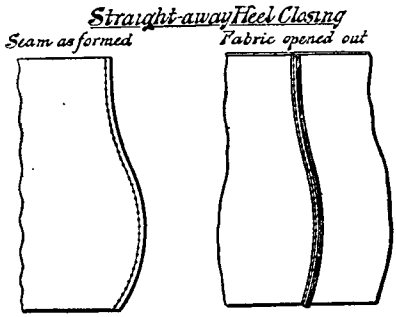

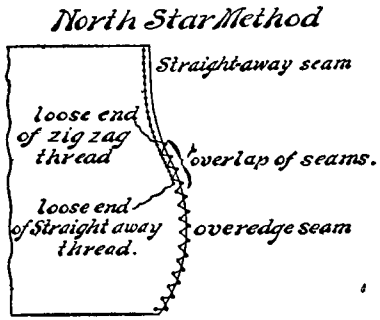

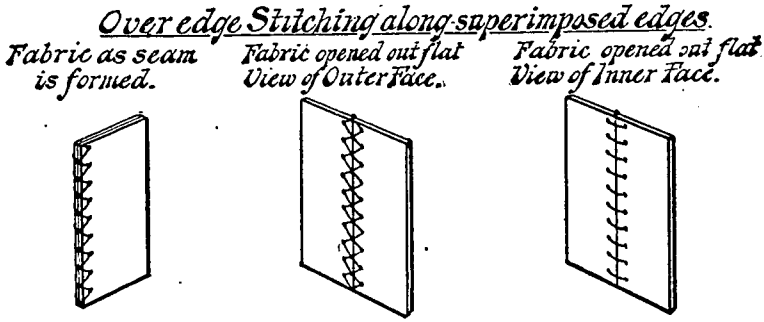

In this North Star practice the ridge was thus confined to the upper part, where it was unobjectionable. This practice, a decided advance over the old art, though open to several objections, was followed for several years. Thus it required, as against the practice of the old

art, two machines instead of one; it required three distinct manipulations as against the one straight-away seam of the old art, viz. sewing the straight-away part seam on one machine, transfer to the second machine, and sewing the overedge part seam on the latter machine. Instead of the work being done continuously by one operator on one machine, it was done noncontinuously by one operator on two machines, or by two operators if done in unbroken sequence. The two stitchings also had to overlap each other to prevent raveling, and this made a bunch and left loose thread. It is obvious, of course, that in this practice much of the potential output of high-speed machines was also lost. The practice, unsatisfactory as it was, challenged attention, and Woodward, the present patentee, in 1902 conceived the idea of a continuous straight-away overedge seam, a seam which was so novel in the art as led the Patent Office to grant him a patent for the seam for sewed articles in patent No. 786,934, of April 11, 1905, as a new article of manufacture, shown in the accompanying drawing:

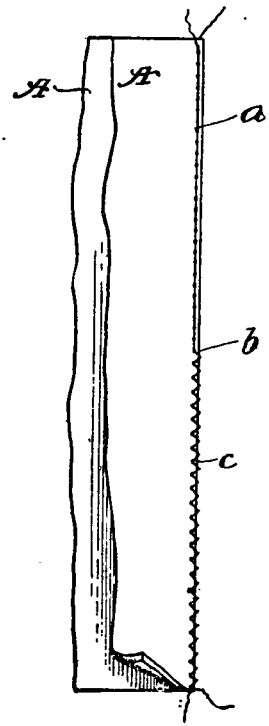

At this point the inquiry naturally arises: How could the Patent Office, having already before it the stitch shown in Hart & Hills' Figure 6 above shown, and a machine capable of doing both straight-away and zigzagged stitching, grant a patent to Woodward for the form of seam he claimed to have originated? But the answer is quite obvious. The form of stitch which Hart & Hills' machine made was not the overedge, hinged stitch which eliminated the objectionable ridge. Woodward's seam had but two stitches in each leg of the zigzag of his seam, one near the edge and one clear over the edge, which made a hinged ridgeless joint, while the Hart & Hills machine had a plurality of stitches in each leg of the zigzag, which, if used to join two superimposed edges, would have left the stiff upright ridge shown in one of the foregoing drawings.

It is therefore manifest that, in the estimate of the Patent Office, the difference between the two seams was such that it involved patentable novelty to change from the one to the other. And if it was right in so holding, it would equally seem clear that it would also require inventive novelty to so remake the Hart & Hills straight-away machine as to enable it to make this novel straight-away, overedge, continuous seam. And such the outcome proved to be, for whereas Woodward, the experienced designer of the plaintiff, and Gray, the experienced designer of the defendant, in the succeeding years sought

to devise a high-speed machine that should make such a seam, neither of them used the Hart & Hills machine as their base. And why they did not is quite apparent, when the problem confronting them is fully comprehended. The operative insistence of the art required that such continuous seam should be made on a high-speed machine making 3,000 stitches a minute, not on a machine such as Hart & Hills, which operated at very much less speed. When it is realized that such high-speed machine makes 50 stitches a second, and that the change from straight-away to a sidewise stitch must be made when the needle is above the leather, and must not be made when it is in the leather, we see the grave inventive difficulties confronting its solution. This problem Woodward attempted to solve by the device shown in his patent No. 753,187, granted February 23, 1904. The proof is that this device was made by the complainant, but after trial proved inefficient and was withdrawn from the market. In that regard the proof is:

"After we ran it in the factory of the Goodbar Shoe Company for a period of six or seven months, we by order of the company took it out of the factory and returned it to Chicago. There was no trouble with the quality of the work which was turned out. The trouble was with the mechanism employed to make the change from straight-away to zigzag stitches, or vice versa. We found that the strain upon the machine in changing from straight-away to zigzag, or vice versa, while running at high speed, was such as to cause a jar to the mechanism employed to make the change of stitches, and also to the machine itself. The machine, by reason of these objections that I have named, was withdrawn from the market."

The cause of this vibration is testified to by another witness, who says, after describing the numerous parts affected by the stitch changing mechanism:

"All this mass of moving parts must be set instantaneously in motion. The result necessarily is to give a very severe shock to the mechanism, which gets it quickly out of order, makes an objectionable noise, and objectionably vibrates the entire machine and the workbench on which it stands."

Nor did Woodward alone fail to solve the general problem of constructing a satisfactory heel-closing machine. The great Wheeler & Wilson Company had made two machines, viz. 17—9—1, No. 16,276, and closing machine 13,485, and the great Singer Company had made two, viz. Nos. 1,142,715 and 67,600; but in each of these machines there was lacking what we shall hereafter see was the basic feature of Woodward's solution of the problem, namely, preventing the stitch-changing mechanism from acting when the needle was in the leather. In that regard the proof as to these four machines is that:

"In each of these machines, the shift can be made at any time, there being nothing to prevent making the shift when the needle is in the wrong place."

This vital feature of these devices Woodward sought to supply, as we have seen, by the device of his patent No. 753,187; but, as it seems to us from the testimony, he failed in his effort to secure satisfactory stitch-changing by reason of the fact that the actual stitch-shift or stitch-change was not effected directly by the operator, but only indirectly by the operator putting in action a long train of connected mechanical agencies which themselves made the shift. But,

whatever the specific cause, the proof is clear that Woodward's device made under his patent wholly failed to satisfactorily solve the problem. Thereupon, on December 3, 1902, he applied for the patent here in issue, No. 890,582, which was finally granted June 9, 1908.

As we view this patent, three salient features stand out which are new in heel-closing machines: First, the abstract conception that stitch-change from straight-away to overedge must be limited to a time when the needle is not in the leather; the second, the abstract conception that the operator, and not the mechanism of the machine, should actually throw the shifting device itself into action; and, lastly, the concrete disclosure of means whereby the operator himself could throw the shifting device into action only when the needle was above the fabric. As we view it, the vital and effective mechanical feature in practically effecting these conceptions was in a stop carried by a moving part of the machine. As to the operator himself, and not the working of the machine, putting the shifting devices into action, the patent says:

"My invention relates to certain improvements in sewing machines, and has for its principal object to construct a machine capable of forming both straight-away and zigzag or overedge stitches, in which the character of the stitch may be changed *at the will of the operator.*"

After reciting that his prior patent, No. 753,187, was for a machine of a similar type, and that "the present invention consists in certain features of construction and arrangement of operating parts, whereby the change from zigzag to straight-away stitching, and vice versa, can only be accomplished while the needle is descending and about to enter the goods, this being accomplished on the left-hand stitch when the zigzag mechanism is at work," the specification adds:

"* * * Or perhaps in one sense the invention may be stated to consist in combining with an over-seaming machine, adapted to have a zigzag movement imparted to the needle, mechanism for imparting such movement, with means for throwing the same into and out of operation at the will of the operator, said means including locking devices which alternately act at the will of the operator, to hold in engagement or release from engagement the zigzag needle mechanism from its operative engagement with the driving shaft."

In other words, the machine was adapted to sew zigzag, it had mechanism for imparting lateral needle movement, which could be thrown in or out of direct operative connection with the driving shaft by the operator at will, subject to the restrictions of the locking device. We are therefore justified in regarding Woodward's device generally as a duplex, straight-away zigzag stitch machine in which the operator, and not the mechanism of the machine, threw the stitch shift into action, but in which a moving part of the machine prevented the operator from so doing at such times as the shift was dangerous. The placing of the shift-controlling mechanism on a moving part of the machine was, as we see it, the key to this combination. Such stop being on a moving, operative part of the machine, it will be apparent that the shifting position and changing control of the stop was dominated by the operation of the machine. The result was that while the operator could at any time, by a simple direct mechanism, throw

the shifting device into potential operative relation, yet the stop stayed the effect of that throw until the further movement of the machine could safely permit the needle to shift laterally. When the machine reached that point, then the stop on the moving part of the machine had been brought to a position which safely permitted the will of the operator to be operatively carried out. It will thus be seen that the stop carried on, and therefore dominated by, the machine, was the safety insurer of the needle shift. It permitted free will to the operator in throwing the shifting device into a position of operative relation with the needle, but it postponed the shifting of the needle until the further movement of the machine made such shift safe.

As we analyze this very complicated machine which Woodward undoubtedly has wonderfully perfected, it seems to us that the placing of the stop on a moving part of the machine is the pith and marrow of the structure. The operator could throw the shift, but the moving stop stayed it and kept it functionless until the movement of the machine placed the needle at a place where it could be safely shifted, and when this needle-safety point was reached the same forward movement of the machine that had carried the restraining stop to a dominating position carried it on to a point where it did not dominate. In other words, placing the stop on a moving part of the machine enabled the movement of the machine to so dominate the stop as to prevent or allow lateral needle shift. This will be apparent from a study of the file wrapper. When Woodward's application was pending, several of his claims were at first rejected; the office holding that Woodward made no—

"exercise of the inventive faculty in making use of a stop carried by a moving part of the machine for preventing action of the controlling means acting on the needle-vibrating means except at a predetermined time, which is shown in the patent to Hart in connection with the ordinary needle-vibrating mechanism disclosed in the patents to Diehl and Noble of record; that is to say, the stop used in the construction of Hart performs the same function in connection with the means for vibrating the needle therein shown as does the stop of applicant which is used in connecting with a needle-vibrating mechanism similar to that shown in the patents to Diehl and Noble of record."

This statement Woodward controverted, and averred:

"That the patent to Hart fails to show a stop carried by a moving part of the machine mechanism for preventing complete movement of the controlling means. Hart shows a stop which is spring-pressed in one direction and which is moved in the opposite direction by a cam. Applicant has done away with all these intermediate parts, and controls his mechanism directly from the moving part of the machine. Furthermore, when the controlling means is controlled by a moving part of the machine, the operation thereof is positive, and actually prevents operation of the controlling means except at certain times. In the Hart construction the controlling means could be operated at any time by manually releasing the stop without bringing the parts of the machine to the proper position for shifting of the mechanism."

The correctness of Woodward's contention was conceded, and we find in the three claims here in issue this feature described as follows: In claim 27 we have the generic element of "a stop carried by a moving part of the machine mechanism," limited only by the requirement, "for preventing complete movement of said controlling means, except

at predetermined points," while in claims 44 and 46 the stop is embodied in somewhat more specific form, all three of such claims being as follows:

"27. In a sewing machine adapted for straight-away or zigzag stitching, a driving shaft, the combination of the needle bar and means for reciprocating it vertically, means for vibrating it laterally, including a vibrating member, connections between the vibrating member and the driving shaft, means for throwing said connections into and out of operation, and controlled by the operator, and a stop carried by a moving part of the machine mechanism for preventing complete movement of said controlling means, except at predetermined points, substantially as described."

"44. In a machine for straight-away and zigzag stitching, a needle and complemental stitch-forming mechanism, means for vibrating said needle to form zigzag stitches, a treadle, means intermediate said treadle and said vibrating mechanism, including a lever, whereby the latter may be rendered effective or ineffective to vibrate the needle, and means co-operating with said lever for preventing the operation of said treadle, except when said needle is in a predetermined position."

"46. In a machine for straight-away and overedge stitching, a needle and complemental stitch-forming mechanism, mechanism for vibrating said needle to form the overedge stitching, controlling means for rendering said vibrating mechanism effective or ineffective, including a lever, a treadle connected thereto for operating the same to cause the overedge stitching to be effected, a spring for operating said lever to cause the straight-away stitching to be effected, and means for preventing the operation of said lever while the needle point is below the plane of the upper surface of the material during the formation of certain stitches."

Referring at this point to the device of Woodward, as shown in the accompanying colored drawings, we may say that the first is a side elevation of the general type of sewing machine embodying Woodward's invention; the second is a cross-section showing the lever in normal position and the machine adapted for straight-away sewing; the third shows the lever depressed and the machine adapted for zigzag sewing; and the fourth shows the device for locking the overedge stitch mechanism. *E*, on the first drawing, is the leather plate under which are the ordinary looper and feeder mechanisms operated from the main shaft *B*. On *B* is a pinion *F*, whose teeth mesh with those on the gear wheel *F'*, which turns freely on a stud shaft *f* (shown on drawings 2 and 3), secured in the arm *a*. The outer end of the shaft is provided with an enlarged circular head *f'*, forming a guide and support for a (green) eccentric or cam secured to and rotating with the gear wheel *F'*. This cam rotates between and in working contact with the two (green) arms *g* and *g'* of a (green) frame *G*, hung on a pivot g^2, carried by the arm *a*, the movement of the eccentric oscillating said arms. To the (green) frame *G* is secured by screw *i* a (green) segment *I* having a curved slot *1* therein, the center of which is at times slightly eccentric to the center of pivot pin *j* (shown in red on Figure 3), carried by the lower end of (red) arm *J*, depending from and rigidly secured to (red) rock shaft *J'*, from which movement is imparted to the (red) swinging needle bar frame *2* of Figure 1. *K* is a (yellow) bar or link having at one end a head embracing a stud *3*, which is adjustable up and down in the curved slot *1* to vary the amount of throw of the (red) rock shaft *J'*. Bar *K* has a longitudinal

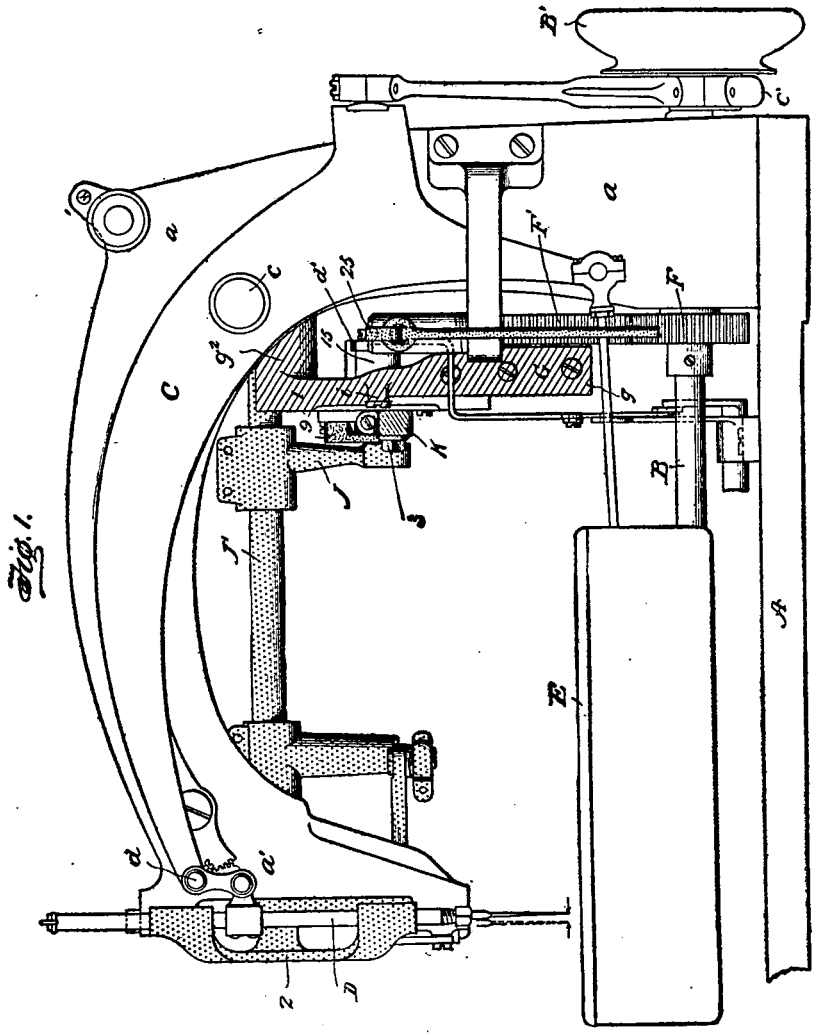

RED	GREEN	YELLOW	LAVENDER	BLUE
2-JJ¹j	I-iGgg¹g²	3-5-7-K	12, 13, 15, 16, 20, 21, 22-25-d¹	8, 9, 10, 11

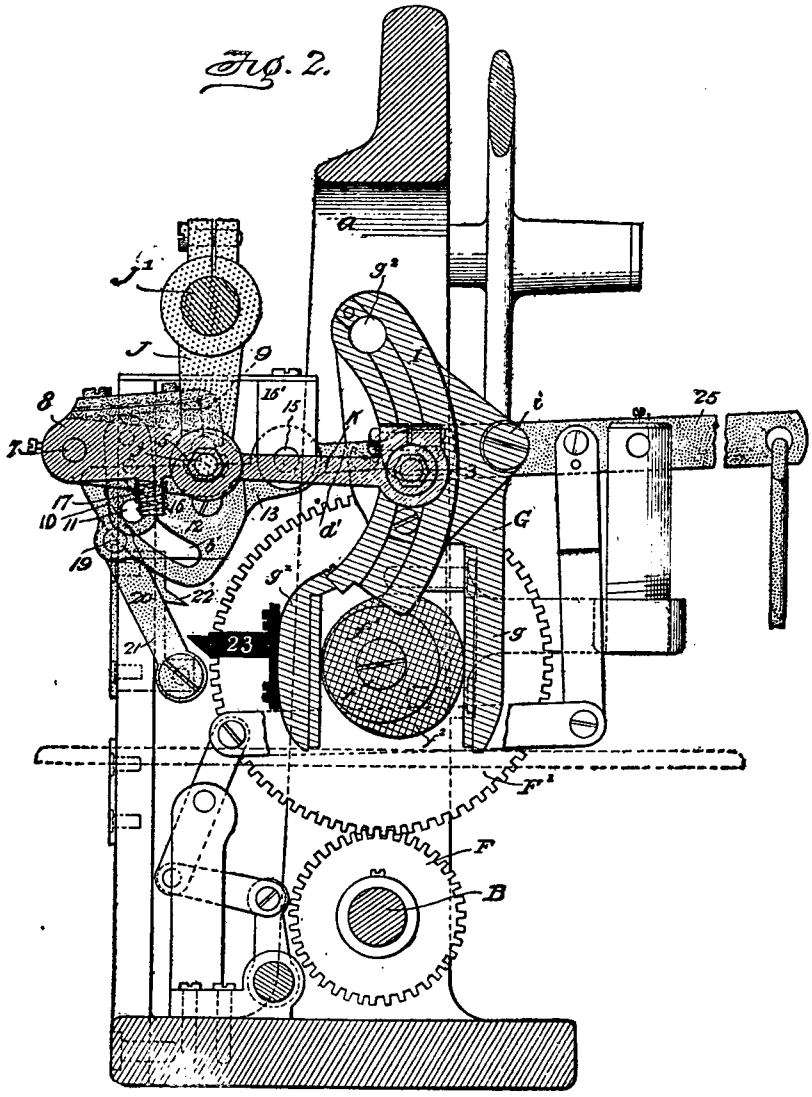

RED	GREEN	CHECKED GREEN	YELLOW	LAVENDER
2-J¹Jj	I-iGgg¹g²	ff¹f²	3-5-7-K	12-13-15-16-20-21-22-25-d¹

BLUE	BROWN
8-9-10-11	23

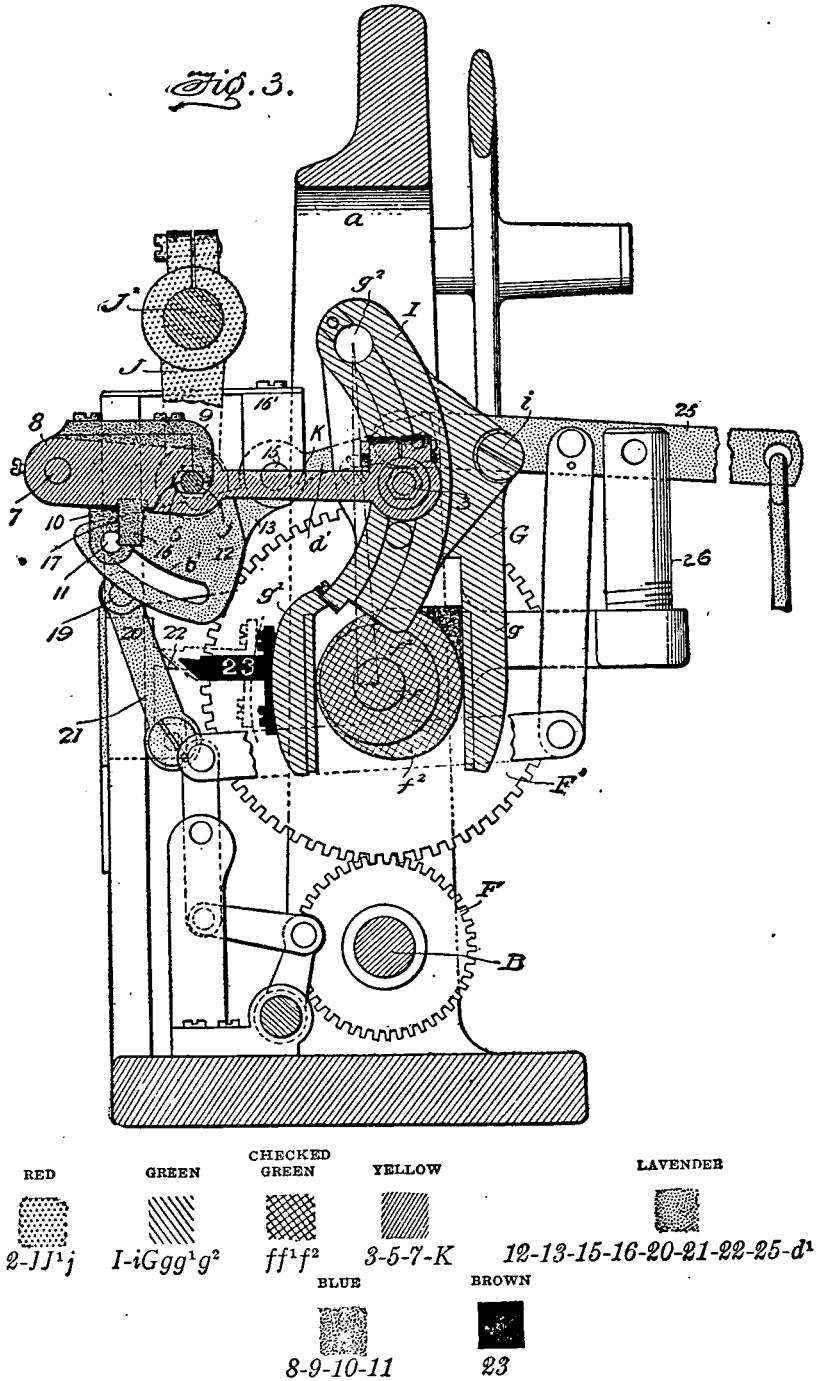
Fig. 3.
a
J'
J
g²
I
i
25
8
9
16'
K
7
10
13
d'
G
26
17
11
12
g¹
19
20
22
23
g
21
f²
F'
F
B
RED
GREEN
CHECKED GREEN
YELLOW
LAVENDER
2-JJ¹j
I-iGgg¹g²
ff¹f²
3-5-7-K
12-13-15-16-20-21-22-25-d¹
BLUE
BROWN
8-9-10-11
23

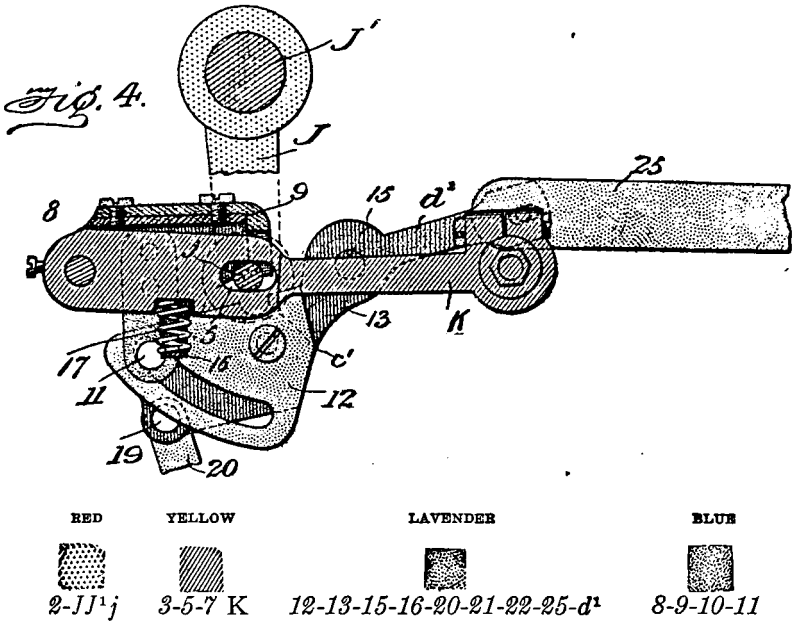

slot *5*, through which passes the (red) pivot pin *j*, the outer end of *K* having pivoted thereto, on pin *7*, a pivoted (blue) frame *8*, which has at its forward end (blue) slotted side forks *9* embracing the (red) pivot pin *j* on the (red) arm *J*. When these (blue) forks embrace the (red) pivot pin *j*, the swinging of (green) segment *I* causes (red) rock shaft *J'* to oscillate. Projecting downwardly from this (blue) pivoted frame *8* is a lug *10*, having on its lower end a pin *11* adapted to fit in a curved slot *b'* on a (lavender) plate *12*, screwed to (lavender) plate *13*, which is pivoted upon a stud *15*, secured to bracket *16'* of the machine frame. The slot *b'* is formed substantially about the (red) pin *j* as a center, and is slightly wider than the diameter of the pin *11*, in order to permit freedom of movement of said pin *11* in slot *b'*, when the stud *3* is adjusted to different points in the length of the curved slot *1*. The plates *13* and *12* are recessed as at *c'* (Figure 4), so that when thrown in their upward position they engage the (red) pivot pin *j* on the (red) rock shaft arm *J'* and thus hold the (red) rock shaft from oscillation when the (blue) pivoted frame *8* is out of engagement therewith. Frame *8* is normally pressed downwardly by spring *17*, seated in the yoke *16*, forming a part of frame *8* and said spring at its upper end bears on the under side of (yellow) bar *K*.

We come now to the stop mounted on a moving part of the machine, in which, as we have said, centers the gist of Woodward's device. It will be seen (Figure 2) that (lavender) plate *13* is pivoted at *19* to the (lavender) link *20* pivoted at its lower end on the (lavender) vertically sliding block *21*, having on its inner side the (lavender) projection *22*,

which co-operates with a (brown) projection *23* on the (green) frame *G*, and *prevents movement of the (lavender) part 22, except when the (green) cam or eccentric* f^2 *is in a certain position,* this being so timed that the cam will only assume this position as the needle is about to enter the leather in its descent. Without entering into minor details we may say that lever *25* is actuated by a treadle which is normally spring-pressed upward. This leaves (lavender) plates *12* and *13* in engagement with (red) pivot pin *j*, so that the machine will then sew straight-away. When, however, lever *25* is depressed by the treadle, then the parts are shifted to cause the (blue) pivoted frame *8* to engage the (red) pivote pin *j*, whereby oscillatory movement will be imparted to the rock shaft, and by it zigzag movement to the needle. It will, of course, be seen that, while the operative may tramp the treadle at any time, this will not force the (blue) pivoted frame *8* entirely into engagement with the (red) pin *j*, until the (green) cam f^2 has pulled the (brown) projection *23* out of line with (lavender) projection *22*, and this happens, and can only happen, when the needle is about to enter the goods. While it is true that in describing this intricate mechanism the specification says, "The change from zigzag can only be accomplished while the needle is descending, and about to enter the goods," it is clear to us either that this statement was inadvertently made, or else that it was meant to designate the shift-changing safety zone between the needle emerging from the leather on its ascent and re-entering it on its descent. We think this is made perfectly plain from the specification as a whole; for, in describing in the extract quoted below the permissive capacity of the stop, it is said the "stop prevents the throwing out *except* when the needle point is *above* the plane of the upper surface of the fabric." In other words, the change-permissible period is not when the needle is going up or coming down, but, whether going up or coming down, it is above the fabric. This the specification makes clear:

"It will be understood that the (blue) pivoted frame *8* cannot be forced entirely into engagement with the (red) pin *j*, until (green) cam f^2 has pulled the (brown) projection *23*, out of line with (lavender) projection *22*, which happens when the needle is on its descent and about to enter the goods. It is necessary that the needle should be positioned in line with the straight-away stitch when the vibrations thereof are rendered ineffective, so that in the continued reciprocation of the needle the stitches will be properly placed within the fabric. If, therefore, the needle is making the overedge stitch, that is, reciprocating beyond the edge of the fabric, and the vibrating mechanism would be thrown out, *the needle would have to be moved laterally, and if below the fabric would be sprung or broken. By my improvement, wherein a stop prevents the throwing out except when the needle point is above the plane of the upper surface of the fabric, or in line for the straight-away stitching, the above objection is avoided.*"

It will also be noted that, while the element of a stop described in some comprehensive form is found in every one of Woodward's 59 claims, in not one of them, except the ninth, where the stop is described as "means for preventing change from idle to active movement of said vibrating mechanism except at a predetermined point *in the descent of the needle,*" is there any description or limitation of

the stop being restricted to the period when the needle is descending. In all fairness it would seem as though the unrestricted language in that regard of these 58 other claims might well, in view of the statement quoted above from the specification, "By my improvement, wherein a stop prevents the throwing out *except when the needle point is above the plane* of the upper surface of the fabric, or in line for the straight-away stitching," be regarded as the Patent Office's view that it did not regard Woodward's device as limited to a stop-restricting needle shift only in the downward thrust of the needle. And when it is considered that the time of that half of the needle's movement, both up and down, which is above the fabric is about one six-thousandth of a minute, and of the upward thrust above the fabric about a twelve-thousandth, we can readily see the grave physical difficulty of basing the question of infringement on such uncertain infinitesimal instants of time, rather than on the indisputable practical result that when the needle point is above the fabric a shift can be and is safely made, and when the needle is in the fabric a shift cannot be and is not made.

This construction of the specification as a whole makes it clear that Woodward's real contribution to the art was not the defining of any particular part of the needle's super-fabric travel when the shift was made, but in the fact, proven by practice to be true, that the shift was made in the needle's super-fabric, and not in its sub-fabric, travel, or, as stated in the extract quoted above, the "stop prevents the throwing out except when the needle point is above the plane of the upper surface of the fabric." It will also be noted that the Patent Office recognized the broad, comprehensive character of Woodward's disclosure of a sub-fabric stop, in that wherever the stop was made a claim element it was in general, inclusive terms, and not as a specified, defined, or restricted mechanism, except in the one claim we have noted. Thus in claim 27, here involved, we have "a stop" whose only requirement is that it be "carried by a moving part of the machine mechanism for preventing complete movement of said controlling means, except at predetermined points." In claim 44, here involved, we have the stop described as "means co-operating with said lever for preventing the operation of said treadle, except when said needle is in a predetermined position." And in claim 46, here in issue, we have the stop described as "means for preventing the operation of said lever while the needle point is below the plane of the upper surface of the material during the formation of certain stitches." To sum up, therefore, we may say that it was the fact and function of a predetermined, sub-fabric, needle-shift stop that constituted the value of Woodward's inventive disclosure to the art, and not the mere mechanical use of a cam to show how his disclosure could be practically used. It follows, therefore, that for us now to narrow his patent protection to servile, mechanical copies of his cam, when the Patent Office has given his stop an inclusive breadth in the claims it allowed, would tend to thwart the purpose of the Patent Office, and in effect penalize invention and stimulate patent piracy.

Regarding, then, Woodward's disclosure as one of really substantial merit in an important art, we next turn to the alleged infringing

device. That it secures the same novel result as Woodward's device is undisputable. Before that disclosure the defendant, in spite of its long years of experience, its able designers, its interest in satisfying the demands of a great industry, and its ample financial means, had never solved the problem of giving the art a successful straight-away overedge sewing machine. The machine it is operating is based on a patent applied for after it was sued as an infringer. Referring to such patent, No. 933,032, applied for June 11, 1909, and granted August 31, 1909, to Gray, it will be noted that by its own statements it does not purport to be "directed broadly to needle-jagging mechanism capable of being changed at the will of the operator for producing either straight-away or zigzag stitching while the machine is in motion." This disclaimed problem, it will be observed, was the one to which Woodward's device was addressed, for, as stated in his specification, it had "for its principal object to construct a machine capable of forming both straight-away and zigzag or overedge stitches, in which the character of the stitches may be changed at the will of the operator." As this problem had already been solved by Woodward; and as the defendant had, when Gray applied for his patent, been sued on Woodward's patent; and as Gray disclaimed the patenting of any such device, but expressly confined his disclosure to "certain specific devices for controlling the needle-jagging mechanism"; and as Woodward had made no claim for any specific device for controlling such mechanism—it is clear that the subject-matter of Woodward's and Gray's disclosures and claims were different, and while Gray's specific controlling device might constitute ground for a servient claim, it could in no way dominate or affect the breadth of Woodward's prior disclosure and claims. Indeed, that Gray's device is servient to Woodward's disclosure is shown by the fact that his device embodies the basic features which Woodward had already shown, to wit, a stop carried on a moving part of the machine and a super-fabric needle shift in a straight-away overedge machine. Thus we find among the elements of Gray's claim 1 "a cam member carried by a moving part of the machine"; in claim 2 "a cam member yieldingly mounted upon a moving part of the machine"; in claim 5 "a cam member mounted upon a moving part of the machine." And in his specification we find the super-fabric needle shift in the straight-away overedge type of machine and the efficacy and adaptiveness of this feature of his type of machine to safely effect such shift thus referred to:

> "It will be observed that the construction of the controlling or locking cam *51*, and its action upon the operating lever *34*, is such that said lever is free to be manually operated through the treadle rod *44* whenever the needle is raised above the work. * * *"

It is equally evident that the position of the lever *34* may be changed "at any time while the point of the needle is above the work on either the 'depth stitch' or 'edge stitch' cycle without injuring the work or endangering the breakage of the needle." Seeing, then, that the application of Gray's "specific devices for controlling the needle-jogging mechanism" are shown by his patent to have been adapted to use in

a straight-away, overedge machine, let us turn to the defendant's machine and inquire whether, in using a machine of that type, with Gray's particular form of stop, the defendant infringed the claims in issue of Woodward's patent. Without entering upon a minute description, we confine ourselves to such features of defendant's machine only as throw light on the question of infringement.

The three accompanying drawings will illustrate the machine:

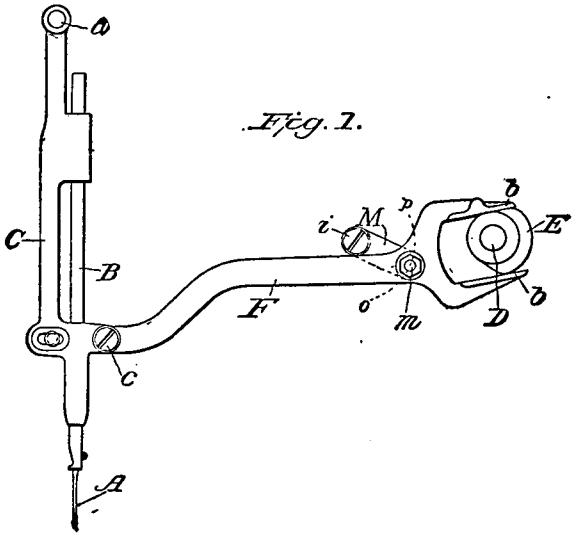

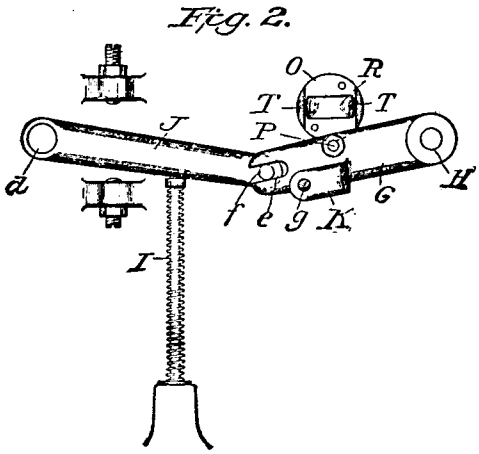

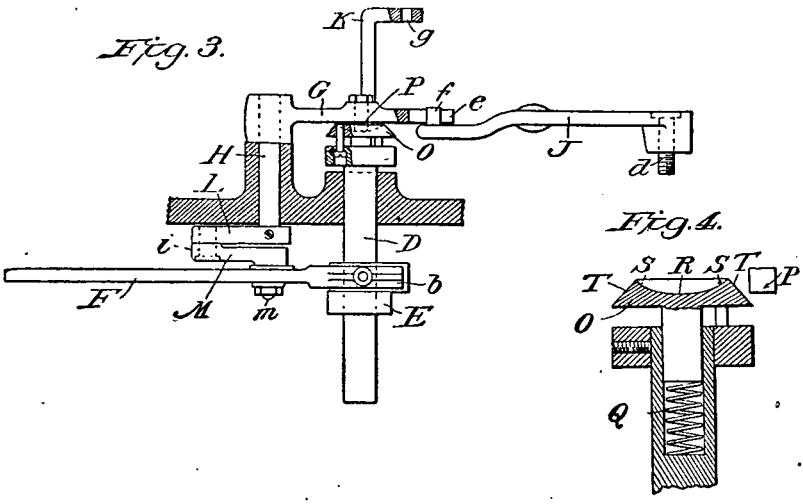

The sewing mechanism proper is of a general, well-known type, and is adapted either to straight-away lock stitches in the same vertical lines or zigzag stitching by lateral shifts and each successive needle thrust. The needle-carrying frame vibrates laterally, like a pendulum, on a horizontal pivot, instead of swinging, as does the plaintiff's frame, on a vertical pivot, like a gate. Both such sewing devices were common in the prior art. The defendant's vibrating mechanism is one which the proof shows "has been in extensive use in Singer sewing machines for about 30 years." The lateral vibration of defendant's needle is made by the swing of bar *F*, one end of which, by its forks *b b*, engages rotating cam *E* mounted on shaft *D*. In the normal position of the machine, which normally does straight-away sewing, the oscillation of bar *F* by constantly rotating cam *E* simply oscillates bar *F* up and down on pivot *c* without causing any vibration of the needle bar frame *C*. In that position the oscillation of bar *F* is idle and functionless. It plays no part in straight-away sewing. To make it functional, and to do overedge sewing, the idle vertical reciprocating of the forked end of bar *F* is changed to a reciprocating horizontal thrust by changing the relation of that forked end to the rotating cam *E*. This is done by the swinging link *M*, which is pivoted at one end to bar *F* at *m* and at the other end is pivoted to a crank arm *L* (shown on drawing 3). This crank shaft *L* is attached to shaft *H*, which is mounted on a stationary portion of the machine and may be rocked by lever *G*. Now, so long as crank arm *L* remains in normal line with bar *F*, the latter turns idly at one end on the pivot *c* and oscillates idly up and down at its forked end on cam *E*. But when crank arm *L* is thrown out of line with bar *F*, which is done by lever *G* turning shaft *H*, attached to crank arm *L*, then the pivot *i* of link *M* is thrown out of line with bar *F*, the latter swings on pivot *i* and thus a reciprocating horizontal thrust of the bar is set up which causes the needle frame *C* to swing or vibrate on pivot *a*. In other words, the calling

into play of pivot *i* as a controlling center calls into play the function of pivot *a* as a center on which the new reciprocating thrust spends itself. Or, to state it in other terms, the link *M* had been simply swinging idly with the bar *F*. But when the axis of link *M* is thrown out of line with bar *F* the swing path of the link becomes an arc which does not coincide with the arc of oscillation of bar *F* on pivot *c*. These two forces vent themselves in a resultant compound of movement, which takes form in a vertical swing of the forked end of the bar from the pivot *c* and a horizontal swing of the bar forward and back from the pivot *i*. This horizontal thrust of bar *F* swings needle-bar frame *C* on pivot *a* and the vibrating needle makes zigzag stitches.

Turning, then, at this point, for example, to Woodward's claim 27, it is clear that the defendant's combination, in the words of that claim, used "a sewing machine adapted for straight-away or zigzag stitching"; the machine has "a driving shaft"; it has "a needle bar," and it has "means for reciprocating it vertically"; it has also "means for vibrating it laterally, including a vibrating member"; it has "connections between the vibrating member and the driving shaft"; it has "means for throwing said connections into and out of operation"; and, lastly, these means are "controlled by the operator." These elements, none of which are by their terms limited to any special construction, are all found in the defendant's device, and that conclusion is, we think, made clear by the foregoing description and analysis of its machine. It follows, therefore, that infringement is made out if the defendant's combination has the remaining element of Woodward's claim, to wit, "a stop carried by a moving part of the machine mechanism for preventing complete movement of said controlling means, except at predetermined points." On this question, in our judgment, the case turns. Let us, therefore, see what stop mechanism is used in defendant's device. The stop proper is the revoluble disc *O* shown on drawings 2 and 3, which is spring-yieldingly attached on the end of the shaft *D*, which in turn carries the cam *E*. By such arrangement disc *O* is so rotated in relation to the stitch-forming mechanism as to interpose its function as a stop during constantly recurring portions of the needle's movement. The disc *O* has across its outer face an elongated recess *R* (Figure 4), whose sides are sunk at right angles to the surface, but whose ends rise until they reach the disc surface where the disc has beveled edges *T*. In the normal, or straight-away, position of the mechanism of the machine, the disc, by its compressed spring, presses at the center of its recess against the pin *P* attached to the lever *G*, which latter, as we have heretofore seen, when pulled, rocks the shaft *H*, which latter swings crank arm *L*, which throws the pivot *i* into action and causes zigzag stitching. But it will be evident that, even if the lever *G* be pulled, the pin *P* cannot escape from the recess until the rotation of the disc brings the inclined recess ends opposite the pin. When this happens, the pin is drawn up the inclined ends and down the beveled side of the disc, and so long as the lever *G* is kept depressed zigzag sewing continues. When the lever, which is depressed against spring pressure, is released, the pin *P* follows the outer periphery of the disc until the rotation of the latter brings

its beveled edge opposite the pin, where it rises over the disc level, goes down the inclined end of the disc recess, rests in the center of the recess, and the swinging link becomes an idling member and straight-away stitching is resumed. It will thus be seen that the defendant's stop is carried by a moving part of the machine mechanism. The difference between it and the plaintiff's construction in that regard is that the moving part of defendant's mechanism produces a rotary movement of defendant's stop, while in complainant's it produces a thrust or horizontal movement. In both alike a cam, acting either directly or through an adjacent part, is the effective agency for producing the timed and timely stoppage which prevents sub-fabric needle shift. In both machines the actual shift of the pivoted member, which controls the vibrating mechanism, is brought about wholly by the operative, and is in no way dependent on the power supplied by the driving shaft of the machine. In both machines the vital operative element which enables both machines to prevent needle-shift when it is unsafe and permit it when safe is a stop carried by a moving part of the machine, for it is this feature that permits the safe synchronizing of needle-shift with timely stop release.

Such being the case, we are of opinion defendant has infringed the three claims of Woodward's patent, Nos. 27, 44, and 46, discussed, and we therefore direct a decree to be entered below adjudging their validity and directing an accounting.

STAR HAME MFG. CO. v. UNITED STATES HAME CO.

JULIUS J. BANTLIN CO. v. SAME.

(Circuit Court of Appeals, Sixth Circuit. November 12, 1915.)

Nos. 2778, 2783.

1. PATENTS ⟹328—INVENTION—HAME AND TRACE CONNECTOR.

The Wiedrich patent, No. 721,987, for a hame and trace connector, covers a combination, each element of which, or its mechanical equivalent, is found in the prior art, where it performed the same function, and is void for lack of invention.

2. PATENTS ⟹26—INVENTION—IMPROVEMENT IN FORM OR DEGREE.

A combination device, which is but a mere carrying forward of the original thought, a change in form, or an improvement in degree, without substantial change in either means or result, does not show invention.

[Ed. Note.—For other cases, see Patents, Cent. Dig. §§ 27-30; Dec. Dig. ⟹26.]

3. PATENTS ⟹36—EVIDENCE OF INVENTION—COMMERCIAL SUCCESS.

Commercial success is not of importance, where the device is clearly lacking in invention.

[Ed. Note.—For other cases, see Patents, Cent. Dig. § 40; Dec. Dig. ⟹36.

Utility, extent of use, and commercial success as evidence of invention, see note to Doig v. Morgan Mach. Co., 59 C. C. A. 620.]

Appeals from the District Court of the United States for the Southern District of Ohio; Howard C. Hollister, Judge.

Suits in equity by the United States Hame Company against the Star Hame Manufacturing Company and against the Julius J. Bantlin Company, respectively. Decrees for complainant, and defendants appeal. Reversed.

L. M. Hosea, of Cincinnati, Ohio, for appellant Star Hame Mfg. Co.

T. Hart Anderson, of New York City, for appellant Julius J. Bantlin Co.

W. F. Murray, of Cincinnati, Ohio, and H. P. Denison, of Syracuse, N. Y., for appellee.

Before WARRINGTON, KNAPPEN, and DENISON, Circuit Judges.

WARRINGTON, Circuit Judge. The appeals in these cases are from decrees entered in two infringement suits which were based upon the same patent. The decree in the first suit was made upon final hearing, with pleadings and proofs, sustaining the validity of the patent, and awarding a perpetual injunction and an accounting; [1] and in the second suit the decree was purely interlocutory, granting a preliminary injunction upon pleadings and affidavits. While the appeals were heard in immediate succession, they were to all intents and purposes submitted at the same time, and so may be considered and determined in this opinion.

The patent in suit No. 721,987, was applied for by Charles L. Wiedrich April 14, 1902, and was issued to him, as assignor to the United States Hame Company, March 3, 1903. The invention claimed relates to a hame and trace connector. The bill and answer in the first case are in the usual forms of patent infringement pleadings, except that the answer sets out certain alleged facts (additional to references to prior patents and publications) for the avowed purpose of showing invalidity of the patent in suit; and the pleadings of the other case are also of the ordinary forms, except that the bill contains a list of prior patents, which are alleged to have been offered in evidence in the first case, and also some specific allegations to explain the nature and degree of the infringement charged, while the answer alleges that the hames sold by the defendant in that case were made according to a prior patent, which is alleged to be infringed by the patent in suit. Thus the validity of the patent in suit is challenged by the pleadings in both suits, though in the brief upon the appeal from the interlocutory decree contention is made simply against infringement.

[1] The issues of validity so made present the question which we regard as decisive of both cases: Does the patent in suit disclose any quality of invention as distinguished from mechanical skill? The devices claimed to be infringements in the two cases differ in some respects, and accordingly the evidence offered in relation to them also differs; but in substance and effect the rest of the evidence is the

[1] This is called a "final decree" in the record; but as to the purposes for which such a decree may be so treated, see Smith v. Farbenfabriken of Elberfeld Co., 197 Fed. 894, 895, 117 C. C. A. 133 (C. C. A. 6th Cir.), approved in Lovell-McConnell Co. v. Auto Supply Co., 235 U. S. 383, 387, 388, 35 Sup. Ct. 132, 59 L. Ed. 282.

same. The patented device will be more readily understood through the drawings used by the patentee to illustrate his specification. They are as follows:

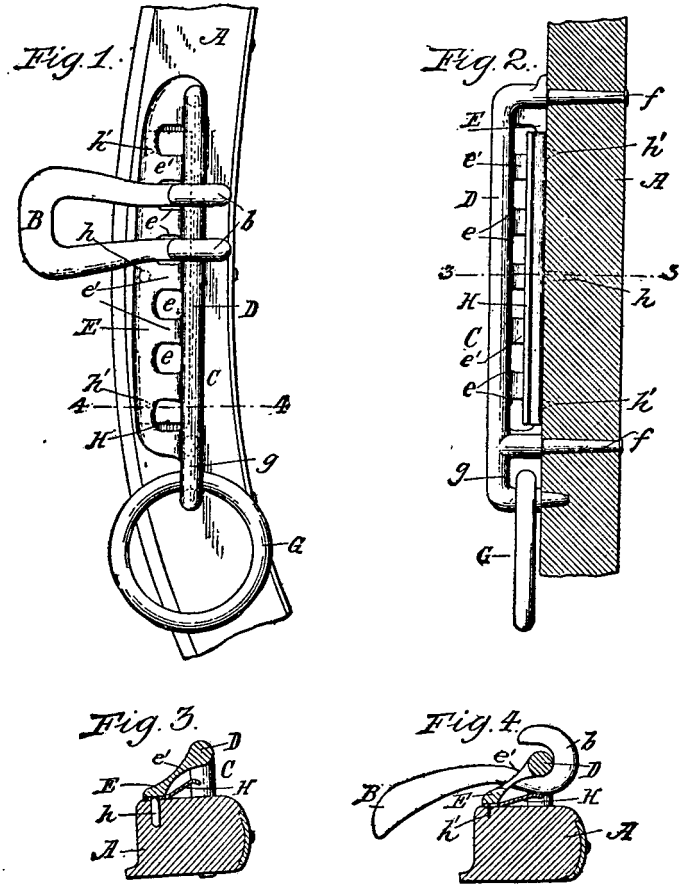

According to the specification, Fig. 1, *A*, is a front elevation of part of a hame, "showing a connector embodying the invention," Fig. 2, a longitudinal sectional elevation with the trace loop *B* removed, Fig. 3 a transverse section on line *3 3*, Fig. 2, and Fig. 4 a like section on line *4 4*, Fig. 1. The specification states that the hame "may be of any usual or preferred form and made of any suitable material." An elongated staple is attached to the hame; and its bar *D* is shown lengthwise by Fig. 1, also with its legs *f* extending through the hame by Fig. 2. A web *E* is formed integrally with the staple bar *D* and inclines from it laterally to the hame, where it is fastened as a brace to the staple bar. The web has a series of openings *e* next to the bar, through which the hooks *b* of the trace loop are inserted so as to engage the bar. These openings are so spaced as to register with the

hooks, and thus the trace loop may be connected with the staple bar at any point desired. An elongated spring plate *H* is disposed longitudinally between the hame and the staple web, with its outer edge fastened to the hame under the outer edge of the web and with its inner edge free and standing normally parallel with and at such a distance from the staple web as to engage the hooks of the trace loop, and by reason of its resiliency presses the trace loop against the staple bar so as to avoid rattling and accidental disengagement. The spring plate is opposite to the openings *e* of the staple web, and so is said to exert a firm and equal pressure upon the trace loop, regardless of the openings in which the hooks of the loop may be placed. The object of the device, as the specification declares, is to furnish ready means of so adjusting the trace loop as to bring the draft to bear properly upon the particular animal used.

Theoretically, especially at first blush, it would be difficult to state a good reason why such a device as this does not involve merit and, moreover, invention; yet it appears that not a single hame device has ever been made according to this patent, unless we take into account devices embodying other features, but having springs and bars which are said to make them infringements through the rule of equivalents, and, further, the patent does not stand the test of the prior art. Every element of the combination is old in both substance and function. The spring plate, however, is an apparent improvement upon its predecessors, though only in degree.

1. *The Elongated Staple and Its Trace Connector.* Concededly the object of the elongated staple is to afford means of effective draft adjustment. In a period of something over 36 years before the date of the patent in suit, as many as 11 patents had been issued covering devices designed to accomplish this result, and each included an elongated staple or its obvious equivalent. True, the means of adjustment at different points along the bar of the staple varied more or less; but these variations involved simply differences in forms and names, not in substance or function. The patents alluded to are cited in the margin.[2] The parts employed to connect the staple and trace were differently named. The trace connector of the patent in suit, as we have seen, is called a "trace loop," *B*; the identical form of this trace loop appeared in the Knisley patent more than 10 years before, and was there called a "hook," *D*. Devices with hooks to engage the staple, though differing in their trace-receiving portions, appear in the Dodson "hook," the Wycough "hasp hook," and the Swigert "hame hook," as they are called in the respective patents; and while the corresponding parts found in the Kaffer patent and the other patents

[2] The earliest patent upon this subject to which our attention has been called is No. 53,830, to Kaffer, in 1866, which shows an elongated staple in the hame with three positions for adjustment of the draft upon the animal. See, further, patent No. 254,552, to Hugill, in 1882; patent No. 297,958, to Wycough, in 1884; patent No. 332,861, to Alexander, in 1885; patent No. 374,657, to Church, in 1887; patent No. 386,615, to Stearns, in 1888; patent No. 470,839, to Knisley, in 1892; patent No. 565,501, to Perry, in 1896; patent No. 640,047, to Swigert, in 1899; patent No. 632,551, to Dodson, in 1899; design patent No. 30,730, for term of 14 years, to Surghnor, in 1899.

cited seem to encircle the staple bar without means of release, still they are manifest equivalents of the trace loop in suit.

There are two of the earlier hame attachments that ought to receive special attention. One is the Knisley device, already mentioned, and the other the design patent to Surghnor, before cited. Knisley's is a metal plate fastened to and suitably disposed lengthwise of the hame, having a portion of one side of the plate raised or struck up and the rest formed into a flange. The ends of the flange and its side are rigidly bolted to the hame. The raised portion of the plate is provided with a line of perforations to receive and afford means of changing the position of the trace loop, which, of course, must result in adjustment of the draft. Surghnor's design has a central ridge with two sides receding laterally to the base of the attachment, and so forming a triangular device with its base fastened lengthwise of the hame; in each of these receding sides is a series of holes which are in line with each other and immediately under the ridge. These two series of holes register in pairs with the hooks of the trace loop, and thus plainly afford means of adjusting the draft through changes in position of the hooks and their engagement with different parts of the ridge. While neither of these devices embraces a spring, as the device in suit does, yet in all three of them mechanical equivalence is quite apparent in every other respect; and of this and of the matter of introducing a spring we shall have something further to say.

2. *The Elongated Spring Plate.* Admittedly the main purpose of the present spring is to prevent accidental displacement or disengagement of the trace hooks. In the patents cited, we find provisions for a number of springs which vary in form and are differently disposed, but which were each designed for a purpose substantially the same as that of the spring in issue. For instance, the old Kaffer patent provides for a flat spring, which is held in place by passing the staple legs through elongated openings in the spring near its ends, and thence into the hame; and the spring is curved outwardly, with its outer surface engaging the inner projections of the staple, which separate the recesses designed for adjustment of the trace connector. The spring of the Dodson patent is mounted with one end fastened to the shank of the upper staple leg and with the free end extending so as to bear against the rear of one or the other of the hooks, in order to prevent the trace connector from being accidentally displaced from either its upper or lower adjustment, or from becoming disengaged from the staple in handling the hame when not in use. In the Stearns patent a bar, having a hole near each of its ends, is mounted on the legs of the staple and held in place by spiral springs, which bear against the hame and force the bar outwardly and into close proximity with the staple recesses, in which the trace tug is placed and changed to adjust the draft. The spring tension bar thus engages the trace tug with equal pressure in whatever recess it may be placed, and at the same time admits of readjustment and prevents accidental displacement of the trace tug. This patent antedates the patent in suit upwards of 14 years, and the feature of similarity between the pressure exerted by

the spring tension bar of the former against its trace tug, and that exerted by the spring plate of the latter against its trace loop, cannot escape observation. It is not necessary to pursue this subject.

3. *Necessary Effect of All These Facts upon the Patent in Suit.* Any interpretation of the prior art will be materially aided by keeping in mind one or two of its most prominent facts. One is that the earlier patents and the patent in suit belong to the same art, and thus the teachings of any other art, whether analogous or not, are unimportant. Another is not simply that at the date of the patent in suit all the parts embraced in its claims were old, but, above all, that each part had theretofore substantially accomplished the very purpose for which the use of the part was designed here. The accuracy of these observations may be seen in a simple grouping of the parts and in comparing them with the references and descriptions already given. The claims of the patent embrace an ordinary hame, an elongated staple with a web, an elongated spring plate, and a trace connector. It cannot be necessary to add anything to what has already been said of these parts, except as to two of them. The first is the particular portion of the elongated bar which the patent calls a web, *E*. This web finds close analogy in the flange of the Knisley patent. True, the longitudinal portion of the flange is fastened upon the side of the hame opposite to that on which the web is attached; but the bolted ends of the Knisley flange, when considered in connection with the raised portion of the plate, fairly correspond with the elongated staple of the patent in suit, and the rest of the flange, in its relation alike to the hame and the raised portion of the plate and also the trace loop of the Knisley patent, responds substantially to every purpose claimed for the web of the patent in suit. Indeed, it is quite plain that, if the spring of the patent in suit were disposed in the Knisley device as it is in the former, it would operate in the same way and still more clearly disclose the fact that the web in question is the equivalent of this flange. It should be said that while some of the experts refer to the Knisley patent, they do not speak of this flange in connection with the web in question; yet in rejecting the original claims contained in the application made under the patent in suit the examiner referred to the Knisley device, stating, we think rightly, that it showed "practically applicant's device, lacking the spring." Further, the Surghnor design patent clearly anticipates the web in question. Description of this design has already been given. The experts treat the "receding sides" of Surghnor's design as a *double web;* moreover, the United States Hame Company has ever since its organization exclusively employed this design as part of its hame device, and it is fairly to be inferred that there must have been some good reason for such a course. One of the witnesses states that the plaintiff below so used the Surghnor design under a license. That patent, however, is not in suit, and, as we have seen, has expired.

The remaining part deserving of some further attention is the spring plate of the patent in suit. There is no material difference between this spring and the other springs before commented on, unless such a difference can be found in method of attachment. We have pointed out

that the fastening of this spring is near its outer longitudinal edge. We have seen that the Kaffer and Stearns springs are each fastened at both ends, and the Dodson spring at only one end. The object sought to be attained, and the mode of applying pressure necessary to that end, through the use of these springs, including the one in issue, are substantially the same. This plainly appears through mere comparison of the new spring with that of either Stearns or Kaffer. It will also be seen that the practical operation of the Dodson spring is substantially like that of the spring in question, if the latter be for the moment treated as though it were cut transversely into as many sections as there are openings in the web, and each of the sections were disposed and operated separately as the patent provides in respect of the spring as a unit; for, upon this hypothesis, it would not be claimed that the sectional springs were not the equivalent of the Dodson spring, any more than it would be that such sectional springs were not the equivalent of the spring in question. Apart from this, however, so far as these springs and their objects and mode of operation are concerned, there cannot, within the well-settled meaning of the patent law, be any difference between a spring attached at either or both of its ends and a spring attached at one of its sides.

We are therefore not impressed with the contention of counsel for plaintiff that the spring in controversy is to be differentiated from the old springs because of its "transverse elasticity." The quality thus ascribed to the spring is an ingenious conception of counsel, since it is not mentioned in the patent; but, assuming the existence of such a quality in that spring, further trouble lies in the difficulty to see any difference in function or operative effect between a spring having transverse, and one having longitudinal, elasticity. It hardly is conceivable, for instance, that the trace hook could be held in place any more effectively by this spring than it could by the Stearns spring. The complete answer to the contention of counsel is, however, that upon any theory the only appreciable difference between the springs of the old art and the spring in question is simply one of extension of the original idea.

In view, then, of the prior art, what room remained for the exercise of the faculty of invention, or for discovery, in producing the patent in suit? Effective distinction between invention and mechanical skill cannot be laid down by general rule. Every case in this respect must be determined according to its special facts. In the present instance, according to plaintiff's testimony, the staple device which the plaintiff actually made and sold, especially the spring,

> " * * * was got up chiefly for the Southern trade, where people are careless, and planters do not keep sets of harness for every size of animal; * * * that in the South mostly chain traces are used, and with an ordinary hook, if the load slackened, it would fall out of the eye of an ordinary link; so this was got up to keep the chain in there and to hook it in. In the South drivers are mostly the cheaper grade of labor, shiftless and careless."

Certainly an instance more fit than this for the application alone of mechanical skill could not often arise. Both the fault and the remedy were known. Devices in the old art had been used for the very pur-

poses declared in the patent in suit, and so the skill of the mechanic was even more available than it was in Mast, Foos & Co. v. Stover Mfg. Co., 177 U. S. at page 493, 20 Sup. Ct. 712, 44 L. Ed. 856, where it was said of the patentee:

"All he did was to apply it [the device] to a new purpose in a machine where it had not before been used for that purpose."

See. also, Western Electric Co. v. La Rue, 139 U. S. 601, 606, 11 Sup. Ct. 670, 35 L. Ed. 294.

[2] If the prior art showed anything, it clearly disclosed appropriate means to adjust the draft and, through the use of springs, to prevent disengagement of the trace hook. The most, then, that can rightfully be said of the combinations stated in the claims in suit is that they are but a mere carrying forward of the original thought, a change in form, an improvement in degree, without substantial change in either means or result. This was not enough; it was not invention. Market Street Railway Co. v. Rowley, 155 U. S. 621, 629, 15 Sup. Ct. 224, 39 L. Ed. 284; Burt v. Evory, 133 U. S. 349, 358, 10 Sup. Ct. 394, 33 L. Ed. 647; Mast, Foos & Co. v. Stover Mfg. Co., 177 U. S. S. 485, 493, 20 Sup. Ct. 708, 44 L. Ed. 856; Grant v. Walter, 148 U. S. 547, 553, 13 Sup. Ct. 699, 37 L. Ed. 552; Belding Mfg. Co. v. Corn Planter Co., 152 U. S. 100, 107, 14 Sup. Ct. 492, 38 L. Ed. 370; Knapp v. Morss, 150 U. S. 221, 227, 14 Sup. Ct. 81, 37 L. Ed. 1059; Galvin v. City of Grand Rapids, 115 Fed. 511, 517, 53 C. C. A. 165 (C. C. A. 6th Cir.); American Carriage Co. v. Wyeth, 139 Fed. 389, 391, 392, 71 C. C. A. 485 (C. C. A. 6th Cir.); Torrey v. Hancock, 184 Fed. 61, 70, 107 C. C. A. 79 (C. C. A. 8th Cir.); Sloan Filter Co. v. Portland Gold & Min. Co., 139 Fed. 23, 26, 71 C. C. A. 460 (C. C. A. 8th Cir.); P. P. Mast & Co. v. Rude Bros. Mfg. Co., 53 Fed. 120, 124, 3 C. C. A. 477; Adrian Wire Fence Co. v. United Fence Co., 223 Fed. 342, 345, — C. C. A. — and citations (C. C. A. 6th Cir.).

[3] In reaching this conclusion we are not unmindful of the insistence that the favor with which plaintiff's hame device was received in the market tends to show invention. While such favor is in some instances helpful and persuasive, it never is where the device is clearly lacking in the attribute of invention (Autosales Gum & Chocolate Co. v. Caille Bros. Co., 224 Fed. 473, 476, — C. C. A. — (C. C. A. 6th Cir.); and further, as we have seen, the device of the present plaintiff included the Surghnor patented improvement, as well as the supposed equivalent of the spring which the patent in suit added to Surghnor, and hence the sales shown have slight relevancy to the question of invention. It follows that the claims of the patent in suit are invalid and void.

The decree must be reversed in each cause, and the causes remanded, with costs, and with direction to dismiss both bills.

NATIONAL METAL MOLDING CO. v. TUBULAR WOVEN FABRIC CO.

(Circuit Court of Appeals, First Circuit. November 20, 1915.)

No. 1143.

PATENTS ⟹328—VALIDITY AND INFRINGEMENT—FLEXIBLE ELECTRIC CONDUIT.
The Osburn patent, No. 652,806, for a flexible electric conduit, was not anticipated, and discloses patentable novelty and invention; also *held* infringed.

Appeal from the District Court of the United States for the District of Rhode Island; Arthur L. Brown, Judge.

Suit in equity by the National Metal Molding Company against the Tubular Woven Fabric Company. Decree for defendant, and complainant appeals. Reversed.

Charles F. Perkins, of Boston, Mass. (Carroll L. Perkins, of Boston, Mass., on the brief), for appellant.

William Quinby, of Boston, Mass., for appellee.

Before PUTNAM, DODGE, and BINGHAM, Circuit Judges.

BINGHAM, Circuit Judge. The plaintiff, the National Metal Molding Company, is the owner of United States letters patent No. 652,806, issued July 3, 1900, to H. G. Osburn, and complains of its infringement by the Tubular Woven Fabric Company. The patent is for an improvement in flexible electrical conduits.

In the District Court it was held that the patented device was anticipated by the prior art; that, irrespective of this, the structure in question did not involve invention; and that, if it did, the claims in issue were not infringed by defendant's device.

The claims in issue on this appeal are Nos. 1, 2, 3, 4, 5, 6, 9, 10, 11, and 12. Claim 3 is typical of claims 1 to 6, inclusive, and claim 11 of claims 9 to 12. They read as follows:

"3. A conduit consisting of a helix of semiflexible material and a flexible material interwoven therewith, substantially as described."

"11. As a new article of manufacture, a helical coil of material having sufficient rigidity of structure to prevent collapsing under the usual conditions of use, and pliable or flexible material interwoven with the convolutions of said helical coil to impart strength to the structure in a longitudinal direction, substantially as described."

In the specification the patentee says:

"My invention relates to a flexible conduit for electrical conductors, my object being to provide a form of conduit which, while possessing the necessary rigidity and insulating properties, may be readily flexed or bent laterally to accommodate itself to the conditions of use, and, furthermore, to provide a conduit which can be manufactured at comparativly small cost."

Prior to the patent in suit rigid tubes, with suitable fittings for turns, had been employed for the installation of electric wires. The only flexible tube used for this purpose was one constructed according to a patent granted to Herrick July 21, 1891 (No. 456,271).

The conduit of the Herrick patent was made in three parts. The

inner part was a spiral strip of suitable material, having the turns of the spiral slightly separated. The second part consisted of a tape or strip wound about the exterior of the spiral to cover the spaces between the turns, the tape or strip being composed of some waterproof flexible material. The third part was a woven jacket or seamless tube having threads so introduced as to destroy its extensibility. The spiral afforded protection and insulation to the conductor, and, while furnishing the requisite rigidity against lateral pressure to which such structures were likely to be subjected during installation, it did not impair the necessary flexible quality of the conduit. The purpose of the nonextensible covering is said to be—

"in order that strain on the conduit in the direction of its length may not operate to separate further the turns of the spiral lining."

It is also suggested that:

"A protecting strip extending longitudinally of the spiral lining and folded around the same, with its edges overlapping, will render the conduit nonextensible, in which case an ordinary braided covering without longitudinal threads may be employed."

It is thus seen that the device of the Herrick patent presented means whereby, if strain was exerted on the conduit or covering in the direction of its length, the turns of the spiral lining would not be further separated; but the patent neither suggests nor provides means for preventing the further separation of the turns of the spiral in case strain is exerted on the end of the spiral instead of on the conduit or covering. It appears from the evidence that, in the installation of conduits constructed under the Herrick patent, the workmen sometimes removed the spiral lining intentionally, and sometimes accidentally, thereby destroying its insulating and protective qualities, and that, because of this, shortly after 1900, it was condemned by the Board of Fire Underwriters and went off the market. Later it was restored to use, the owners of the patent having devised means, not for interlocking the turns of the helical member so that they would not be further separated or the member removed by a strain upon it, but by inserting perforations at frequent intervals in the helix, thus weakening its structure so that it would be broken off, and only a short strip removed in case it was subjected to strain.

In the patent in suit provision is made for a helical member of semiflexible material, and the patentee declares:

That he has employed "the term 'semiflexible' with reference to the material used to indicate that property which the material should possess of being sufficiently flexible to permit of the same being bent into tube-like form, while having sufficient permanency of form to preserve the tube-like shape without undue tendency to collapse or flatten, as would be the case if the material were too pliable"; that "the term therefore contemplates any material capable of being bent into the proper form, and having sufficient rigidity of structure to preserve its form under the conditions of use"; and that "for the semiflexible element cardboard, fiber, metal—such as steel ribbon, wire, and the like—and * * * strips of cane or bamboo" may be used.

He also provides that the convolutions or turns of the helix should be "bound together or locked in a longitudinal direction by means of elements of pliable or flexible material interwoven or interconnected

with the successive turns or convolutions to impart longitudinal strength to the tube"; and he says that:

"For the pliable or semiflexible material used *to bind or lock the convolutions together* I may employ thread, yarn, wire, or any similar material lending itself to being readily interwoven with the semiflexible element."

And again he says in referring to this matter:

"In the specific embodiment of my invention, illustrated in Figs. 1, 2, 3, and 4 of the drawing, a strip *a* of semiflexible material is coiled into a helix, and a series of threads *bb* are interwoven therewith, the threads extending longitudinally *to securely lock the successive layers or convolutions together* and impart strength to the tube in a longitudinal direction."

For one form of his device the patentee provides a covering made of woven threads, or of threads braided together. And the reason why a braided covering may be employed, as well as one formed of woven threads, is stated as follows:

"In flexible conduits of the prior art the structure has been such that the covering has been relied upon to impart longitudinal strength to the tube, and it has therefore been necessary to employ for the covering threads woven together, with one series of threads extending circumferentially and another series extending longitudinally. Due to the fact that the tubelike skeleton of my construction possesses in itself longitudinal rigidity and strength, other forms of covering having little or no tensile strength may be employed."

From the foregoing it appears that the specification of the patent discloses means whereby the turns of the spiral are securely locked together, and separation of the turns, or extension of the conduit in a longitudinal direction, will be prevented, whether the conduit is constructed with or without an outer covering, and whether strain is exerted directly upon the helical member or upon the conduit constructed with or without a covering or jacket.

The claims in issue relate to the form of conduit disclosed in the specification for which no outer covering is provided, and it is contended on the part of the defendant that the structure of these claims is not an electrical conduit, but is a conduit or article of manufacture designed or intended to be used for a purpose other than inclosing and insulating electric wires. In support of this contention it relies in a large measure upon certain statements of the patentee in his specification. Fig. 2 of the patent is a drawing disclosing the structure covered by the claims in issue. At one place in his specification the patentee, in speaking of the structure disclosed by this figure, says, "Fig. 2 is an enlarged view of the *skeleton of the conduit,*" and at other places he refers to it as the "skeleton," "the tubelike skeleton," "the tube," and "the tube-like structure," and says that any "preferred covering may be employed for the tube *to complete the conduit.*" If this was all that the patent disclosed relating to this matter, we should be inclined to agree with the defendant that it was not intended the tubelike structure of Fig. 2 should be an electrical conduit. But further examination of the specification makes it clear that it was intended the structure of Fig. 2 should be an electrical conduit and should constitute one form of the invention, for the patentee says:

"The conduit [meaning the structure of Fig. 2] may be employed without the provision of an additional covering, as shown, for instance, in Fig. 2, al-

though I preferably provide an exterior protecting covering, as shown in the other figures."

It is also contended that none of the claims of the patent, whether in issue or not, are for an electrical conduit. This contention we regard as without merit. The title of the patent is, "Flexible Electric Conduit"; in the specification the patentee states:

That he has "invented a certain new and useful improvement in flexible electric conduits," that the "invention relates to a flexible conduit for electrical conductors, my object being to provide a form of conduit which, while possessing the necessary rigidity and *insulating properties*, may be readily flexed," etc., that "in one embodiment of my invention I have employed for the woof thin strips of cane and for the warp cotton thread or twine, and find this combination to be well adapted for the conduits on account of the *insulating properties* of the cane and the cotton," and that "where material as steel ribbon is used for the woof, wire may be used for the warp, or, preferably, cotton thread or twine, since the thread or twine passing across the inner and outer faces of alternate convolutions of the metal will form layers of *insulating material* upon the interior and exterior of the tube or conduit."

It is also contended that, inasmuch as the claims and specification do not specifically provide for the use of fireproofing and waterproofing compounds, a conduit constructed according to either of the forms disclosed in the specification would be impracticable and useless as an electrical conduit. But the record discloses that, at the time the application for the patent was filed, waterproofing and fireproofing compounds were well known in the art of making electrical conduits, and, inasmuch as the patent discloses that the forms of construction in question were intended for electrical conduits, we think that fireproofing and waterproofing compounds were impliedly included in the specification, though not specifically disclosed.

The position is also taken that, if the specification contemplates the use of waterproofing and fireproofing compounds, the structure shown in Fig. 2 is incapable of properly receiving and retaining the compound, and is therefore worthless as an electrical conduit. There was evidence in support of this contention. There was also evidence to the contrary, and that the structure is not only capable of being properly treated with fire and waterproofing compounds, but that it had actually been so treated successfully. We see no reason why the latter testimony does not state the fact correctly, nor, in view of the disclosures of the patent, any reason why the weft member may not be made of such size and the warp members of such number and size as to render the weave sufficiently close to properly receive and retain the compound, without rendering the interior surface of the tube unsuitable for the introduction of a conductor. The demonstrations made in open court lead us to believe that the interior of the plaintiff's device presents a sufficiently smooth surface to permit the ready introduction of wires.

If the device of the patent is novel and involves invention, the defendant further contends that, under the claims in issue, the plaintiff is limited to a construction in which the helical or weft member is the cane strip disclosed in the specification, and, thus limited, the defendant's device does not infringe, as the helical or weft member of its

device is a twisted paper fiber. But, in view of the disclosures of the patent, we fail to see why the patentee or his successors in title should be limited to the use of the cane strip for its helical member. In explanation of the term "semiflexible," employed in the claims to denote the character of the material from which the helix is to be made, and of the same term employed in the specification for a like purpose, the patentee states:

"I have employed the term 'semiflexible' with reference to the material used to indicate that property which the material should possess of being sufficiently flexible to permit of the same being bent into tubelike form, while having sufficient permanency of form to preserve the tubelike shape without undue tendency to collapse or flatten, as would be the case if the material were too pliable. The term, therefore, contemplates any material capable of being bent into the proper form and having sufficient rigidity of structure to preserve its form under the conditions of use. I may employ for the semiflexible element cardboard, fiber, metal—such as steel ribbon, wire, and the like—and * * * strips of cane or bamboo."

The mere fact that a twisted paper fiber had been previously used for a weft in making a flat fabric intended for roofing, and its use for this purpose had been disclosed in letters patent granted to Robinson September 16, 1852, No. 36,474, does not militate against the plaintiff's right to such a weft member, for the conditions of use under which it is employed are not the same. Here it is employed to maintain a circumferential rigidity to the tube against the conditions of use under which the tube is employed, while in the Robinson patent the structure was flat, and not of a tubular nature calling for circumferential rigidity.

In the defendant's device the turns of the helical member are securely locked together by interwoven, longitudinal strands which prevent separation of the turns and impart longitudinal rigidity to the structure. The defendant's expert admits that its conduit embodies the structure of all the claims in issue, and we think it infringes plaintiff's device, if that device is not anticipated and involves invention.

Is the plaintiff's device anticipated by the prior art, and does it involve invention? In this connection the defendant contends that flexible electrical conduits do not belong to a distinct art, and that it is entitled to go into the general art of weaving seamless tubular structures to show anticipation. It is true that seamless woven tubes were old, and that semiflexible helical weft members in seamless woven tubes and flexible warps interwoven with a semiflexible helical weft were old; but none of these structures were suitable to answer the purpose of a flexible electrical conduit. They comprise such articles as lamp wicks, garden hose, and suction hose, and we do not regard them as sufficient on the question of anticipation. Neither do we regard the device in suit as anticipated by the Herrick patent, which was the only flexible electrical conduit prior to the plaintiff's; it did not anticipate the latter for lack of means to securely interlock the helical turns so that they would not be removed when pressure was exerted upon the helix.

The remaining question, therefore, is whether by the introduction into this art of means for securely interlocking the turns of the helical

member and rendering them incapable of further separation against longitudinal strain, and by the same means producing a smooth lining for the tubing, the device of the patent performed a new function and accomplished a new and beneficial result. We have heretofore shown that, while the Herrick conduit was flexible, possessed the requisite qualities of rigidity against lateral pressure, and was capable of withstanding longitudinal strain when exerted upon the conduit or cover, it was lacking in the qualities necessary to withstand such strain when exerted upon the helical member, and that, because of the absence of this quality, the helical member was open to being intentionally or accidentally removed, or the turns separated, and that, if removed, the conduit lost its circumferential rigidity, and the conductor was deprived of the protecting and insulating qualities afforded by the helical member, and that, if the turns of the helix were only further separated, the diameter of the conduit would be lessened, rendering it difficult, if not impossible, of use for the introduction of a conductor.

The plaintiff's device overcame these difficulties, and presented means whereby, if the conduit was constructed with an outer cover, the helix would not be removed from the cover, or its turns separated by strain exerted upon it in a longitudinal direction, and further disclosed that a conduit could be constructed, without a cover, which would be non-extensible, and the turns of its helix would not be separated by strain exerted upon it in a longitudinal direction. In this respect, we think the plaintiff's device performed a new function, accomplished a beneficial result, and involved invention. The situation here under consideration does not differ in any material respect from that presented in Fitchburg Duck Mills v. Barrell, 214 Fed. 777, 131 C. C. A. 189, decided by this court May 20, 1914. At any rate, the circumstances are such that we do not regard the prima facie evidence of invention arising from the issue of the patent as overcome.

The decree of the District Court is reversed, and the case is remanded to that court for further proceedings not inconsistent with the opinion passed down this day; and the appellant recovers its costs of appeal.

PUTNAM, Circuit Judge (concurring). While I concur in the result, I think that something further is necessary to make it plain why we undertake to reverse the District Court in what it decided with great attention and care. Its opinion contains some expressions indicating that the claims in the patent, if read literally, are to be construed to cover the whole art of conduits made for any purpose, provided they contain a helical transverse construction with a longitudinal binding thread. In reading the claims alone, such might be the effect; but the specifications are introduced with the words "flexible electrical conduits," and the product, whatever it is, is limited to such purpose according to the ordinary rules of construction.

It is not an uncommon conclusion that, while ordinarily a patented construction is infringed if applied to any use whatever, whether named in the claims or not, this is not a universal rule; but there are many circumstances under which a merely new application, especially with some change, is patentable. These cases are constantly occurring

in practice. The authorities abound in them. A striking example, with a sufficiently full discussion of the reasons involved, and with the necessary limitations, is found in the decision of this court in Heap v. Tremont & Suffolk Mills, 82 Fed. 449, 27 C. C. A. 316, decided on August 21, 1897.

The patent at bar, in view of the fact that what had preceded it had held the field so long and been so clearly inapt and awkward, is one of this class of cases, in view, also, of the fact that the patentee's adaptation was so simple and successful. It is true that the helical form of conduit was customary in all the arts, but it had a peculiar adaptation in meeting the strain called for in this device, and enabled the manufacturer to dispense with several awkward elements that had been before regarded necessary.

A device by Herrick had preceded the patent in suit. The District Court incidentally described what was done by the patentee as an improvement; but it spoke of it as merely structural, and therefore decided that it was competent for the respondent to rely on what was well known in the art of constructing flexible tubes, even if such tubes had not been applied to electrical nonconductors. Right here was the error on the part of the District Court, in view of the circumstances to which we have referred. Without going into the matter at length, it is enough for us to say that such is not the universal rule, and that it does not always apply under these circumstances. The patentee, indeed, accomplished in practice what, in our opinion, was an improvement; and thus he was in line with many other inventions to which we might refer.

COURSON v. O'CONNOR et al.

(Circuit Court of Appeals, Seventh Circuit. October 5, 1915.)

No. 2210.

1. PATENTS ⟹83—PRIORITY OF RIGHT BETWEEN INVENTORS—DILIGENCE IN MAKING APPLICATION.

An inventor *held* to have exercised due diligence in applying for a patent, although three months elapsed after he perfected his invention before he verified his application, where he went within a week to employ a solicitor, and the subsequent delay was caused by absences of the solicitor, to the facts that he was very busy, and that the inventor held a responsible position in charge of many men, and could attend to the matter only outside of working hours, and to the time required to prepare the drawings.

[Ed. Note.—For other cases, see Patents, Cent. Dig. §§ 108, 109; Dec. Dig. ⟹83.]

2. PATENTS ⟹83—PRIVITY OF RIGHT BETWEEN INVENTORS—DILIGENCE IN MAKING APPLICATION.

In considering the question of diligence in applying for a patent after the invention is perfected, the circumstances surrounding the inventor must be taken into account. Reasonable diligence does not require him to devote his entire time thereto, nor to abandon his ordinary means of livelihood, nor can he be held accountable for the usual delays incident

to the business of a busy solicitor, nor even to the latter's unusual delays, not amounting to actual negligence.

[Ed. Note.—For other cases, see Patents, Cent. Dig. §§ 108, 109; Dec. Dig. ⚷83.]

3. PATENTS ⚷114—SUIT IN EQUITY TO OBTAIN PATENT—PROOF OF DILIGENCE.

In a suit under Rev. St. § 4915 (Comp. St. 1913, § 9460), to obtain the issuance of a patent, complainant does not have the burden to establish his diligence beyond any doubt to overthrow an adverse finding by the Patent Office, where such finding was expressly based on the complete absence of evidence on the subject.

[Ed. Note.—For other cases, see Patents, Cent. Dig. § 166; Dec. Dig. ⚷114.]

Appeal from the District Court of the United States for the Eastern Division of the Northern District of Illinois; Ferdinand A. Geiger, Judge.

Suit in equity by John F. Courson against Martin A. O'Connor, W. H. Miner, and the W. H. Miner Company, Incorporated. Decree for defendants, and complainant appeals. Reversed.

Charles M. Clarke, of Pittsburgh, Pa., and Otto R. Barnett, of Chicago, Ill., for appellant.

George I. Haight, of Chicago, Ill., for appellees.

Before BAKER, KOHLSAAT, and MACK, Circuit Judges.

MACK, Circuit Judge. This is a proceeding under R. S. § 4915 (Comp. St. 1913, § 9460), to determine priority of invention of a friction draft gear for railway cars. The case is free of the complications ordinarily attending such an inquiry. No question of priority of conception, knowledge of one another's activities, or estoppel is involved. Courson conceived his invention in 1898; O'Connor 10 years later, in November, 1908. During this period, Courson experimented and tested his invention some eight or nine times; the final test was on October 17, 1908. O'Connor's application was filed on February 4, 1909; Courson's on February 8, 1909. In view of this earlier constructive reduction to practice by O'Connor, the burden was on Courson, after proving his priority of conception, to establish either an earlier actual reduction to practice or diligence from the time O'Connor entered the field down to the date of filing his application.

In all of the stages of the interference proceeding through the Patent Office and the Court of Appeals of the District of Columbia, as well as in this case in the District Court, it has been held that Courson failed to exercise the requisite diligence, and that none of his tests amounted to a reduction to practice. The finding of the Examiner of Interferences that diligence was excused was not concurred in by the other tribunals. In view of the conclusions reached by us on the other phase of this case, it is unnecessary to determine whether the District Court gave due weight to the additional evidence introduced in this proceeding in reference to the October, 1908, occurrences as establishing reduction to practice.

That Courson was fully satisfied with the October, 1908, tests as demonstrating the practicability of his invention and the advisability

of now applying for a patent is amply proven. It is clear, too, that whatever the correct legal conclusion may be, he fully believed that he had thereby actually reduced his conception to practice. Upon this he relied in the interference proceedings, and therefore offered no evidence other than the date of completion of the patent drawings, January, 1909, and the execution of the application, January 19, 1909, to explain the delay in filing the application or to establish diligence. The opinions rendered clearly show that it was this complete absence of evidence on this point that led to the conclusion of lack of diligence.

The Examiners in Chief stated:

"We think that his test of October, 1908, may be taken as proof of diligence on his part just prior to the conception of O'Connor, but from the time of the October test, which is understood to have taken place on the 17th of that month, until Courson's filing date, on February 8, 1909, there is absolutely no testimony to show that he did anything whatsoever toward reducing his invention to practice, or as to what steps, if any, he took toward the preparation of his application for patent. However, the Courson application was executed on the 19th of January, 1908, a fact of which we may take notice, and which is in itself evidence bearing on the question of his diligence. However, between the date, October 17, 1908, when the last test was conducted and the 19th of January, 1909, when the oath of the first application was executed, a period slightly over three months intervened, during which time, in the absence of proof to the contrary, it must be assumed that Courson was not exercising any degree of diligence. During that time, also, O'Connor entered the field and set about reducing the invention to practice. The question which therefore presents itself for determination is whether or not an unbroken period of three months' inactivity is such a length of time as will defeat a claim of due diligence. We believe that this question must be answered in the affirmative. * * * Nothing can be said of the character and reasonableness of the inventor's testimony and that of his witnesses as to what was transpiring during the three months' period when Courson should have been diligent for as before stated the testimony is silent as to occurrences of that period."

The Commissioner of Patents says:

"There is absolutely no testimony that he did anything between the date of the last test, October 17, 1908, and the date upon which his application No. 476,588 was filed, February 8, 1909. * * * The only question which therefore remains to be considered is whether the unbroken period of three months' inactivity on the part of Courson was such as to subordinate his right to the patent to his opponent who, in the meantime, conceived and reduced the invention to practice. * * * No sufficient reason is shown why he could not have filed an application for a patent upon the devices covered by these applications or any of those in which he embodied his invention at any time, either previous to or during the period which intervened between October, 1908, and February, 1909."

The Court of Appeals held (38 App. D. C. 484):

"A more difficult proposition is presented on the subject of diligence. * * * It appears that the last test made by Courson was on October 17, 1908, which it may be conceded shows diligence on his part just prior to the entry of O'Connor into the field, but his activity seems to have ceased at that point. Nothing further was done until the 19th of January following, when the oath to his application was made. Almost a month then elapsed before the application was filed in the Patent Office."

A suit under section 4915, unlike the hearing in the Court of Appeals of the District of Columbia, is not an appeal, and thus a continuation of the patent proceedings. It is an original, independent action,

in which all of the questions are tried de novo. An opportunity is thus afforded to introduce additional testimony bearing on the matters theretofore considered as well as evidence to establish other bases for and defenses to the grant of priority. And in this case Courson for the first time offered considerable evidence specifically in support of his claim that he had exercised reasonable and proper diligence after the October, 1908, test down to the date of the execution of the application, January 19, 1909, and some evidence in explanation of the delay of not "almost a month," but only 17 days, in filing it. His own testimony was fully corroborated by other witnesses and stands uncontradicted on the record.

The District Court was not, and we are not, called upon to balance the evidence offered in the interference proceedings, either alone or as supplemented by that adduced in this case, for, as the Patent Office tribunals correctly state, no evidence of diligence was before them.

[1] The sole question is whether the evidence now offered for the first time establishes diligence; if it does, then the decision against Courson's priority of invention based on a total absence of such evidence cannot be sustained. In our judgment, reasonable diligence from the time of the entry of O'Connor into the field in November, 1908, and this concededly is the only period involved, is fully established.

Courson had theretofore secured his patents through Washington, D. C., attorneys. He had but recently learned that the rights reserved by him on the assignment of another patent drawn by these attorneys were not what he desired and expected. He attributed his loss, not to lack of skill of these attorneys, but to his inability to confer with them personally. Believing his present invention, as shown by the October, 1908, test, to be the best of many things done by him in the field of draft gears, he was desirous of securing the aid of a patent attorney equal in ability to his former solicitors, but residing in Pittsburg, 15 miles from Pitcairn, his home. Within a week after the October test, he called on his lawyer and friend, J. C. Gray, to recommend some one. Gray was not in. Courson called on him again the next time he was in Pittsburg, the first part of November. While Gray mentioned Charles M. Clarke, he stated that he wanted to consider the matter carefully, and asked Courson to come in again. Courson called several times, but Gray was out. Finally Courson decided to turn the matter over to his Washington solicitors, and on December 4th prepared a letter for them. On December 7th, he had occasion to be in Gray's office on another matter, and Gray again unsuccessfully tried to reach Clarke. A few days later, however, Courson and Gray saw Clarke and retained him.

Treub, one of the Pennsylvania Company's draftsmen at Pitcairn, had made the preliminary drawings. Because he could talk matters over with him at all times, and because Clarke's draftsman was very busy at that time, Courson had him prepare the final Patent Office drawings. These took some time, as Treub had never before prepared a standard Patent Office drawing, and as he could devote only his extra hours to the work. He found difficulties in drawing the

perspectives as desired, and had to go to Clarke's office for consultations in reference thereto. With Courson, he conferred daily.

But he began the work immediately after Clarke was retained. One sheet was finished before Christmas; the other early in January. At the end of the first or beginning of the second week of January, Courson took them to Clarke, who stated that he would have the papers ready in a week. Courson telephoned him several times, and when they were ready came in and executed them on January 19, 1909. Clarke was very busy at the time. The draft gear business was practically new to him. He desired time to go over the documents carefully, to be sure they were right before sending them to Washington. Courson called on him shortly thereafter, but Clarke had not yet gone over the papers. They were sent, however, before the next visit.

[2] In considering the question of diligence, the circumstances surrounding the inventor must be taken into account. Courson was at the head of a large and important shop, in charge of nearly 3,000 men. His time was not his own. Unless he gave up his position, he could ordinarily devote only his own, not his employer's, time to his inventions. He could go to Pittsburg, not when he desired, but when the work at the shop made it convenient.

The exercise of reasonable diligence in preparing and filing his application does not require an inventor to devote his entire time thereto, or to abandon his ordinary means of livelihood. He cannot be held accountable for the usual delays incident to the services of a busy patent solicitor, or even for the latter's unusual delays not amounting to actual negligence. The law does not require him to employ an experienced patent draftsman in lieu of one thoroughly competent, but unable, because of other work and inexperience, to get the matter done with exceeding promptness.

If Courson was to retain his important and highly responsible position with the railroad, he was necessarily compelled to make the perfecting of his invention and the preparation for his patent subordinate to his other pressing daily activities. But we cannot agree with the learned trial judge that even if, under the foregoing facts, the conclusion were justified that the invention received only such attention as Courson was able to give to it after the full discharge of his immediate obligations to his employer, a lack of reasonable diligence is to be charged against him.

[3] Nor can we concur in his opinion that in a case like this, where the entire testimony bearing on the question is presented for the first time in the District Court, the burden is on the plaintiff to establish diligence beyond any doubt, in order to overthrow the adverse finding of a lack of diligence, expressly based by the Patent Office tribunals on the complete absence of evidence on the subject. In this vital respect the case differs from Morgan v. Daniels, 153 U. S. 120, 14 Sup. Ct. 772, 38 L. Ed. 657, in which no new evidence whatever was offered.

The decree must be reversed, and the cause remanded, with directions to enter a decree in accordance with the views herein expressed.

DE MAYO COALING CO. v. MICHENER STOWAGE CO.

(District Court, S. D. New York. May 1, 1915.)

PATENTS ⟹328—VALIDITY AND INFRINGEMENT—APPARATUS FOR COALING SHIPS.

The De Mayo patent, No. 797,364, for an apparatus for coaling ships, was not anticipated, and discloses invention, as evidenced in part by its capacity to work under all weather conditions, which has given it great commercial success; also *held* infringed.

In Equity. Suit by the De Mayo Coaling Company against the Michener Stowage Company. On final hearing. Decree for complainant.

Isaac B. Owens, of New York City (Nathan Cohen, of New York City, of counsel), for complainant.

Charles S. Champion, of New York City, for defendant.

AUGUSTUS N. HAND, District Judge. The patent in question was granted to Louis A. De Mayo, on August 15, 1905, United States letters patent No. 797,364, and is for coaling vessels. The complainant relies upon claim 7 of the patent, which reads as follows:

"In an apparatus for coaling ships, the combination of a frame and elevating means thereon, means for driving the elevating means, the driving means being mounted on the frame, means mounted on the ship and connected with the upper part of the frame to suspend the same from the ship, and guy devices at each side of the frame; said devices being in connection with the frame and with the ship."

A prior patent was granted to Johannes Bennik, under United States letters patent No. 674,753, on May 21, 1901. The specification in the letters patent states that:

"This invention has relation to elevators, and more particularly to bucket and similar elevators ordinarily employed in handling coal, grain, and like substances, and more especially adapted for transferring such substances from the hold of a vessel to a storage building or to a vehicle."

The first claim, which is reasonably typical of the Bennik patent, is for:

"A pendulous bucket elevator, comprising a head and leg, a bucket band pulley in said head, a like pulley at the lower end of the leg, a motor for the pulley in said head, and means for supplying motive power thereto from a source distant therefrom, said elevator head provided with means for suspending the same from a flexible support, for the purpose set forth."

Another prior patent, United States 676,075, granted to Alexander MacDougall on June 11, 1901, is stated in the specification to relate to mechanism for unloading ore and coal from the holds of vessels to docks, cars, etc. Claim 1 of this patent sets forth:

"The combination of an elevator leg pivoted over a vessel, an endless bucket elevator within the leg, means for operating the elevator, means for supporting the leg in a vertical position, means for raising and lowering the leg, a conveyer, connecting the out-take of the leg to a fixed discharge, a flexible means for supporting the conveyer in a normally horizontal position, and means for swinging the intake of the leg over the cargo. * * *"

The invention covered by the patent in suit consists of the combination of (1) a frame; (2) elevating means thereon; (3) means mounted on the frame for driving the elevator; (4) means mounted on the ship for suspending the apparatus; (5) guy devices at each side of the frame in connection with the frame and with the ship.

Complainant's counsel urges that the prior patents do not include any such guy devices as appear in the patent in suit and that the elements in combination constitute a patentable invention. He further urges that the problem of coaling a ship from a barge, which the patent in suit successfully solved, is much more difficult than the problem of raising coal from the hold of a ship and conveying it to a dock, or of lowering it from a dock to the hold of a vessel. These things, he says, are all that Bennik and MacDougall attempted to accomplish by their inventions. It is doubtless true that it is easier to raise coal from the hold of a large vessel, because there is in such case little rocking by the waves and tides. In the MacDougall patent, however, the diagram shows a barge being unloaded upon a dock. The apparatus is erected upon the dock, and is therefore steady; but the movement of the barge would be as unsteady as the conditions of the waves and tides might warrant. There would be consequent danger of collision between the apparatus and the barge, so that the problem was much the same as in the cause under consideration.

The Bennik patent, perhaps, contained all the elements of the patent in suit except the guy devices. The British patent No. 11,903, to Reginald Haddan, granted in 1902, seems to contain substantially the same elements as that of Bennik. Flexibility in respect to movement in a vertical direction is affected by the suspension of the frame by a block and fall to prevent it from breaking through the bottom of the barge in case the latter should suddenly rise in the sea. This characteristic the Bennik patent and the Haddan patent each possessed. The British patent No. 4,434, to Archibald Thompson, also showed a similar method of flexible suspension of the elevator from a ship to a barge. Guy devices to prevent lateral swinging are found in the MacDougall patent, though there they are attached to the barge from which the material is to be raised. In the patent in suit there are guy devices attached to the frame and the barge to direct and steady the former, but additional pivoted guy rods run between the ship and the barge. It is urged that if the latter guy rods contribute substantially to the use of the complainant's apparatus, and if any further guy devices than the guy ropes attached to the barge are important to prevent lateral motion, they could be so easily applied by one skilled in the art that they are not to be regarded as an element of the invention. In other words, the defendant says that the flexible mobility of the apparatus appears in the means of suspension found in the Haddan, Thompson, Bennik, MacDougall, and other inventions, and that the method of steadying by a guy device to prevent movement in a lateral direction is found in the MacDougall patent, and is so simple, moreover, as to be apparent to any one.

The fact remains, however, that no evidence is offered to show that the devices covered by the Bennik, MacDougall, Haddan, or Thompson

patents have ever proved a commercial success in coaling ships, while the complainant's device has, so far as the evidence discloses, revolutionized the art. The MacDougall device was apparently adequate, when taken by itself, to raise coal; but the method of flexibly steadying and directing the apparatus shown in complainant's device is more simple, in that the apparatus requires no structure for suspension, is readily attached to the ship, and maintained in flexible operation at an angle which both the expert, Ashley, and the text-writer, Zimmer, at page 9 of his book on Mechanical Handling of Materials, insist is essential for unloading coal. The Bennik device on its face was only intended for coaling where the conditions were practically stationary and required no especial adaptation of the apparatus to the swaying motion of a coal barge loading a ship. Moreover, the structure of the coal buckets appears less substantial and less fitted for digging into the coal than in the patent in suit. The MacDougall apparatus seems less flexible, is certainly more complicated, and not as well adapted for attachment to a ship.

It is insisted by the defendant that complainant's guy devices form no useful part of its apparatus and are not in fact employed by it when coaling ships. These devices are not mentioned in complainant's printed catalogue for the trade, nor do they appear in the photographs of the coal elevator with which this catalogue abounds. Moreover, defendant introduced some evidence of use on the part of complainant without any guy devices. It is quite probable, however, that the guy devices may be absolutely necessary when coaling is done in somewhat rough water, and that the great commercial success of complainant's mechanism is due to its capacity to work under all sorts of conditions. No explanation is offered for the great commercial success of complainant's coal elevator. So far as the proof goes, it was the first mechanism practically to solve the problem of loading coal from barges to ships. By means of these elevators the largest ocean liners can be coaled with 8,000 or 9,000 tons of coal inside of 24 hours, and the art has apparently been revolutionized. By reason of this fact, and the apparent adaptation of all the elements set forth in claim 7 to the very useful result attained, I think the success is reasonably to be attributed to all these elements in co-operation.

As was said by Mr. Justice Bradley in Loom Co. v. Higgins, 105 U. S. 591, 26 L. Ed. 1177:

> "Now that it has succeeded, it may seem very plain to any one that he could have done it as well. This is often the case with inventions of the greatest merit. It may be laid down as a general rule, though perhaps not an invariable one, that if a new combination and arrangement of known elements produce a new and beneficial result, never attained before, it is evidence of invention."

There can be no doubt whatever that all the elements described in claim 7 were never united before, and, though they were all known in the prior art, their "combination and arrangement [produced] a new and beneficial result never attained before. * * *" I therefore hold that the patent as embodied in claim 7 is valid.

The next question to be considered is whether defendant's apparatus

constitutes an infringement. The question of infringement is determined by whether defendant's apparatus contains the equivalent of the guy devices embraced in complainant's claim. The guy rods designated by the number 16 in the patent in suit tend to prevent the elevator frame from swinging in a lateral direction, and also prevent it from swinging out from the ship beyond a distance measured by the length of these rods. They slide up and down the elevator frame, as the angle formed between the frame and the ship increases or diminishes, and thus adjust themselves to the position of the frame. The defendant's mechanism, instead of employing guy rods, uses tackle which assist in suspending the apparatus, but are hung from such a position that they not only suspend, but steady, and prevent lateral swinging, as well as swinging out from the ship. These tackle, I think, furnish a mechanical equivalent of the guy rods, which is sufficient to prevent undue lateral motion of the apparatus and hold the triangular device through which the elevator slides from swinging out from the ship. Moreover, claim 7 of the patent in suit does not mention guy rods, but speaks of "guy devices," so that ropes, instead of rods, if attached to the ship to steady and prevent lateral motion of the elevator, would come within the direct language of the claim.

If the defendant's apparatus can be successfully operated by mere vertical suspension from a ship without employing tackle so hung as to prevent the lateral swinging, which complainant's apparatus was designed to avoid, the defendant can use it without infringing; but defendant's present device, in my opinion, infringes.

A decree should follow for an injunction and accounting.

MacDONNELL v. VOORHEES RUBBER MFG. CO.

(District Court, D. New Jersey. January 10, 1911.)

PATENTS ⟹328—VALIDITY AND INFRINGEMENT—PNEUMATIC TIRE.

The MacDonnell patent, No. 981,208, for an improvement in pneumatic tires, which consists in rendering the inner tube self-healing in case of puncture by means of a wrapping or stay strip of canvas, which is incapable of stretching transversely, but capable of stretching in a direction longitudinally, of the tire, was not anticipated and discloses invention; also *held* infringed.

In Equity. Suit by James MacDonnell against the Voorhees Rubber Manufacturing Company for infringement of letters patent No. 981,208, for a pneumatic tire, granted to complainant January 10, 1911. On final hearing. Decree for complainant.

Duell, Warfield & Duell, of New York City, for plaintiff.

Prindle, Wright & Small, of New York City, for defendant.

RELLSTAB, District Judge. The patent in suit, No. 981,208, for improvement in pneumatic tires, was issued to plaintiff January 10, 1911. The bill charges infringement. The defenses are invalidity and noninfringement.

⟹For other cases see same topic & KEY-NUMBER in all Key-Numbered Digests & Indexes

The object of the invention is to produce an inner tube which, when punctured, will be self-healing without preventing it from assuming the natural shape upon inflation. In his application for the patent the patentee states:

"It has heretofore been proposed to make a pneumatic tire with a tread portion thickened and made of rubber which is held under compression, so that, if the tire is punctured, the hole will be immediately sealed up as soon as the puncturing body is withdrawn This construction has been secured by molding the tire tread in a normally depressed position and securing firmly to the exterior of the rubber body a stay strip of canvas or similar material, so that when the tire is inflated the nonstretching qualities of the stay strip will cause the rubber to be compressed. So far as I am aware, in all prior attempts to make a tire of this type, the stay strip or backing has been inelastic, both transversely and longitudinally. While the inelastic quality in a direction transversely of the tire is essential to maintain the desired compression of the rubber, yet if the backing is not capable of stretching in a direction longitudinally of the tire, then, when the tire is inflated, the circumferential length of the tread portion cannot be appreciably increased, and the tire will assume its shape when inflated by a compression longitudinally of that portion of the tire opposite the tread.

"My present invention is in the nature of an improvement on tires of this class, and aims to provide a construction wherein, when the tire is inflated, the tread portion thereof is held against stretching in a transverse direction, thereby securing the desired compression of the rubber, while at the same time said tread portion can expand or stretch longitudinally to permit the tire to assume its inflated shape, without subjecting the portion of the tire opposite the tread to any appreciable longitudinal compression."

"I accomplish my desired object by making the stay strip of such a character that it is incapable of stretching transversely, but is, on the other hand, capable of stretching in a direction longitudinally of the tire. In the drawings, I have shown two embodiments of my invention, but the invention is not limited to the constructions herein illustrated. * * *

"The pneumatic tire herein illustrated is especially designed for use as an inner tube in a double tube tire; but in the drawings I have not deemed it necessary to show the shoe or outer casing, as the manner in which an inner tube is received within the shoe is well known. The inner tube is shown at *3*, and it is in the form of an endless tube of rubber which is molded with the tread portion *4* somewhat thicker than the other portions of the tire. The rubber tire has applied and firmly secured thereto a backing or stay strip *5* which has special characteristics as hereinafter described. The tire is molded in the form shown in Fig. 1 with the tread portion in a normally depressed or concaved position, and during the process of making the tire the stay strip *5* is firmly secured to the outer surface of the tread portion when in its depressed position. While it is not essential to the invention that the envelope or stay strip *5* should entirely inclose the tire, yet I prefer to make it as herein shown, and to provide the edges *8* of the stay strip which extend about the portion of the tire adjacent the rim of the wheel with suitable means, such as eyelets *9* by which they may be connected together by lacing *10*.

"The stay strip *5* is so made that it is incapable of stretching transversely of the tire, but is capable of stretching in a direction longitudinally of the tire. Since the stay strip cannot stretch in a direction transversely of the tire, it will be readily apparent that when the tire is inflated, as shown in Fig. 2, the rubber forming the thickened tread portion of the tire will be put under considerable compression, due to the fact that the outer face of the rubber is not permitted to expand because of the presence of the stay strip. It will also be apparent that when the tread portion *4* is forced outwardly as the tire is inflated the circumference longitudinally of said tread portion is increased considerably in length; but owing to the fact that the stay strip which I employ is capable of stretching longitudinally, the presence of the stay strip does not interfere in any way with such increase in length.

"The stay strip, having the capacity of stretching longitudinally while being incapable of stretching transversely, may be made in a variety of ways. One way of thus making the stay strip is to cut it on the bias; that is, to so form the stay strip that the warp and weft threads extend diagonally across the width of the strip, as seen in Figs. 3, and 4. Where this construction is employed, the stay strip is capable of stretching longitudinally as required to accommodate the increasing circumferential length of the tire as it is inflated, and such longitudinal stretching results in tending to draw the edges *8* of the stay strip together as will be obvious. This tendency not only counteracts any tendency of the strip to stretch transversely, and thus makes the stay strip inelastic transversely, but also tends to actually decrease the width of the stay strip, and thus augments the compression under which the rubber forming the tread portion *4* is placed.

"In Figs. 5 and 6 I have shown another embodiment of my invention, wherein the stay strip is provided with slits through its central portion to permit of the necessary longitudinal stretching of the portion which overlies the tread of the tire. In this case, the warp threads extend longitudinally of the stay strip and the weft threads extend transversely thereof, but the slits *20* formed in the stay strip permit the necessary elongation thereof at the tread portion of the tire.

"From the above it will be seen that my invention comprehends the use of a stay strip for securing the desired compression of the tread portion of the tire, which stay strip is incapable of stretching transversely, but which is capable of stretching longitudinally to permit of the natural inflation of the tire."

This nonstretchableness transversely of the stay strip, while it is yet stretchable longitudinally, is the gist of the alleged invention, and is made the dominant element of each claim in issue—1, 2, and 4. These claims, after being first rejected, were allowed by the Commissioner of Patents. Of the patents cited by him, Moffatt, No. 470,070, March 1, 1892, alone is mentioned in the large number of patents relied upon by the defendant.

As noted in the patentee's recital of the prior art, a stay or backing strip, made of elastic or stretchable material, firmly attached to the tread surface of a pneumatic tire, was known and used in such art to effect an auto-healing of tire punctures. None of the cited patents, however, taught the need or desirability of stretching the strip longitudinally while preventing its stretching laterally. Compression both ways—longitudinally and transversely—was the desideratum in all the prior devices, and that seems to have been the dominant concept in all the efforts to produce such a self-healing device. The need or desirability of securing a longitudinal expansion while effecting a transverse or lateral compression of the tire seems not to have been recognized.

Moffatt (Moffatt and Huss), No. 470,070, and British Golding, No. 14,468 of 1891, are the patents mainly relied upon by the defendant as anticipations. No other will be specifically referred to, for the reason that, if these are ineffectual for this defense, none of the other citations can be of aid to it. Both had for their object the prevention of the escape of air from and the collapse of the punctured tire. This, it was claimed, was accomplished by providing the tire with an external restraining jacket or covering of canvas or similar material, which prevented the stretching or lengthening of the outer surface of the inflated tire held under compression. These patents typically illustrate the prior art, which predicated its efforts in producing a "self-

healing" or "self-closing" tube, in case of puncture, on a condition of inelasticity of the jacket or stay strip both longitudinally and transversely. It is apparent that a pneumatic tube compressed longitudinally as well as transversely would be of no practical value as regards inner tubes, because, while such double compression would accomplish "self-healing," the inner tube could not increase in diameter externally, and would be likely to burst under the strain resulting from any effort to make it set firmly to the inner surface of the shoe, which is apt to vary both in size and inner conditions, as well as under the shocks that necessarily attend its use in automobile service.

MacDonnell's conception was that longitudinal inelasticity of the stay strip was not necessary to secure the required compression; that that could be obtained, though the strip were permitted to extend longitudinally; and that a longitudinal stretching would tend to decrease the width of the stay strip, and thus augment the compression obtained by the strip's being made transversely inelastic. Such longitudinal extensibility would also permit an inner tube to seat its tread portion firmly against the inner surface of the tread portion of the shoes, which, though intended to be the same size, vary somewhat in their internal dimensions and surface conditions. This accommodation to such variation in the internal dimensions and conditions of shoes is of great practical value in the use of such tubes. It avoids supplying many different sizes of tubes, and prevents the breaking or disintegration of the stay strip under the strains and shocks to which automobile tires are subjected when in use. It also minimizes the friction apt to result from less firm contact between the tube and the shoe. MacDonnell took the structure of the acknowledged prior art, of little practical value in service, as it was the product of an idea pointing in the wrong direction, and by appropriating the sustained stretchability longitudinally of the fabric used in making the stay strip, the reverse of the teaching of such art, he augmented the transverse compression shown in the prior art, and avoided the objectionable compression longitudinally, which the devices of such art necessarily produced, and secured a commercially practical tire as against the inoperative one of the prior art.

The defendant's contention that, inasmuch as the stay strip shown in the cited patents, and in use in the prior art, is capable of longitudinal extension, therefore there is no invention in appropriating such characteristic, even in the combinations claimed, is not tenable. True, such art used a stay strip of elastic quality, which, because of its shape and inherent characteristics, would stretch more longitudinally than laterally, and which, as pointed out by some of the cited patents, could be made to stretch even more in a given direction by cutting the strip on the bias; yet MacDonnell's conception in the use of such means was entirely different from anything that had preceded, and his actual use of these old means was so radically contrary to the teaching of the art as to amount to a repudiation thereof, and the results obtained by him in such use are so different as to place his combination of these old means in a new class. His combination produced a structure outside the teaching of the prior art. Its novelty and utility are proven, and, in my opinion, the idea or conception mechani-

cally expressed by and through the elements of such combination amounts to invention.

Does the defendant's structure infringe? Not only is it capable of extending longitudinally under pressure, but it is intended to do so while it compresses transversely. Defendant's tubes are known as "Brown Perfection Tubes," and are made in accordance with the structure disclosed in Brown's application for patent, serial No. 704,637. In this application Brown said, with reference to his compression band (stay strip):

"The fabric which I use is one having sufficient elasticity so that, as the longitudinal periphery of the tread expands to fit the periphery of the tire shoe, the fabric will stretch and not break transversely. On the other hand, it is desirable to have as little elasticity to the said compression band transversely as may be. I find Seal Island canvas to be a fabric which complies with these conditions. The rubber in the portion of the tire opposite the tread portion, being unrestrained by the compression band, may stretch, if necessary, so that the inner tube may completely fill the cross-section of the tire shoe."

In differentiating this tube from the tube of the Birtwisle patent, cited against the Brown application, Brown said:

"Birtwisle's tube would burst in actual use, because the extent of free rubber is not sufficient to allow for the expansion to fit the various size shoes. His stretch of rubber is so slight that the percentage of elongation would be over 300 per cent. greater than in applicant's tube as preferably made."

These excerpts show that Brown's tubes were designedly capable of stretching longitudinally, that such characteristic distinguished them from the cited art, and that it was essential to a practical inner tube that it preserve such extensibility to a marked degree. Without a stay strip stretchable longitudinally, the defendant's structure could not have obtained its admitted commercial success. Its strip, however, is not cut on the bias, and its extensibility longitudinally is not increased by slitting it transversely. It is cut straight, and its extensibility is that which inheres in the fabric used plus the return from the contraction resulting from rubberizing the fabric, which return is induced through the pressure of inflation, presently to be mentioned. Again, by reason of the different method employed in the manufacture of the defendant's tubes—one taught in the prior art—from that pointed out in the MacDonnell patent, a greater extensibility of MacDonnell's stay strip is necessary to seat its inflated tube firmly against the shoe than in the case of the defendant's tube. The defendant stretches its fabric before it is rubbered, with the result that the extensibility of the stay strip after it has become a part of the tube is somewhat reduced below that which it would have possessed if such stretching had not taken place. In rubberizing the stay strip, it is contracted. This contraction, however, is not permanent, as a longitudinal stretching takes place when the tube is inflated, and it may, if necessary, stretch to an extent at least equal to the amount it had shrunk in vulcanization—about three inches—which would be ample to seat the tube firmly to the inner surface of the tread portion of the shoe. The several elements of the defendant's structure, except that of longitudinal extensibility of its stay strip, are

within the teaching of the patents of the prior art, and as to such extensibility the defendant's combination employs no more than remains in the fabric after the stretching and contracting that take place in the process of making its tube.

It is in this feature, however, that the defendant's structure passes outside the teaching of such prior art and comes within the instruction of the MacDonnell patent. That, in constructing a tube according to the method named in the MacDonnell patent, a longer stay strip would be necessary than in the tube as constructed by the defendant, is of no significance, inasmuch as both methods of forming the tube are taught in the prior art. The gist of MacDonnell's invention is not in the comparative length of the stay strip, nor in obtaining a greater extensibility longitudinally than is normally inherent in a given fabric, but in utilizing, instead of preventing the use of, its extensibility longitudinally, while at the same time contracting and compressing it transversely for the purposes specified. That the defendant does not use a slitted stay strip, or one cut on the bias, does not save its structure from being an infringement, unless MacDonnell is limited to such character of strip. He instanced such ways of making a strip to secure his longitudinal extensibility and lateral compression, but he expressly disclaimed the notion that these were the only mechanical means of securing such a result. The defendant's utilization in making its stay strip of a fabric which possesses considerable extensibility, and which through the method of its employment extends only longitudinally when the tube is inflated, which longitudinal extension is essential to a proper adjustment of the tube to the shoe which incases it, and which character of extensibility is one of the results sought in the use of such stay strip, is but the equivalent of the means pointed out by the MacDonnell patent to accomplish a like result.

In my opinion, the defendant's structure utilizes the same idea in substantially the same way for the same dominant purposes, and obtains thereby substantially the same results as are pointed out in the plaintiff's patent, and in so doing infringes the plaintiff's invention, as covered by claims 2 and 4 of the patent in suit.

The plaintiff is entitled to the usual decree for injunction and accounting.

NIKOLA TESLA CO. v. MARCONI WIRELESS TELEGRAPH CO. OF AMERICA.

(District Court, S. D. New York. August 10, 1915.)

1. PATENTS ⟹127—SUIT TO CANCEL INTERFERING PATENT—PLEADING.

In a suit for cancellation of a patent, allegations in the answer of a decision of certain questions in issue in a prior suit not between the same parties are irrelevant and impertinent.

[Ed. Note.—For other cases, see Patents, Cent. Dig. §§ 179, 180; Dec. Dig. ⟹127.]

2. PATENTS ⟹127—SUIT BETWEEN INTERFERING PATENTEES—ISSUES.

A suit under Rev. St. § 4918 (Comp. St. 1913, § 9463), for cancellation of an interfering patent, involves the validity of both patents, and the answer may allege any ground of invalidity of complainant's patent.

[Ed. Note.—For other cases, see Patents. Cent. Dig. §§ 179, 180; Dec. Dig. ⟹127.]

In Equity. Suit by the Nikola Tesla Company against the Marconi Wireless Telegraph Company of America. On motion to strike allegations from answer. Sustained in part.

George H. D. Foster, of New York City (Lemuel E. Quigg, of New York City, of counsel), for complainant.

Sheffield & Betts, of New York City (James J. Cosgrove, of New York City, of counsel), for defendant.

AUGUSTUS N. HAND, District Judge. This is a motion to strike out as impertinent and insufficient certain allegations of the answer to the bill of complaint in a suit brought to have the defendant's patent adjudged void.

[1] The eleventh paragraph of the answer alleges the invalidity of the invention of the Marconi patent and avers that certain claims thereof were sustained by the United States District Court of the Eastern District of New York in a suit by the complainant against the National Electric Signaling Company, and that it was determined by that court that complainant's patents did not anticipate and were not for the same inventions as the Marconi patent. It is not alleged that the defendant in that suit was in privity with the defendant here, or that the latter had any control over or relation to the litigation. I can see no principle under which that decision, rendered between wholly different parties, is binding here or relevant, except as a mere legal precedent. It can only be presented as argument in relation to the legal issues involved, but not as a fact to be pleaded or proved. The motion to strike out the eleventh paragraph of the answer as impertinent is therefore granted.

The thirteenth and fourteenth paragraphs of the answer allege that (1) the complaint does not state facts sufficient to constitute a cause of action; and (2) that the complaint is not entitled to any answer or to have defendant's patents declared void. These allegations amount to a demurrer, and, while unnecessary, are not prejudicial. The defendant could in any event raise the same questions at the trial, and I therefore shall not strike out these mere statements that defendant takes such a position.

The fifteenth, sixteenth, seventeenth, eighteenth, nineteenth, and twentieth paragraphs set up that (a) the Tesla patents have no utility; (b) that for the purpose of deceiving the public they are made to cover less than the whole truth relative to the alleged inventions thereof; (c) that they are anticipated by prior patents and publications; (d) that there was prior invention by other persons; (e) that there was prior public use of the alleged Tesla inventions; (f) that in view of the prior art, set forth in the answer, the Tesla system involved no patentable invention.

These allegations are all good defenses to the suit, unless the issues are necessarily narrowed to the bare question as to whether complainant's patent is prior to defendant's. The bill alleges infringement, but the prayer for relief specifically asks for nothing more than an adjudication that defendant's patents are void for interference with the prior patents of complainant. Under the less technical requirement than formerly of new equity rule 25, it may be unnecessary to pray specifically for relief against infringement to which the facts pleaded would show a right, but it would be safer for the complainant to amend its bill in this respect, though the bill contains a prayer for general relief.

[2] It is held in well-considered cases that section 4918 of the Revised Statutes, which allows a patentee to obtain relief in equity against the owners of an interfering patent, is not to be interpreted as allowing him to prevail if his own patent is void for lack of invention, want of novelty, prior use, or for any of the other reasons which constitute a defense to an ordinary patent suit. The opinion of Judge Benedict in the case of Pentlarge v. Pentlarge (C. C.) 19 Fed. 817, and certain other decisions are to the contrary; but the cases of Foster v. Lindsay, Fed. Cas. No. 4,976, Palmer Pneumatic Tire Co. v. Lozier, 90 Fed. 732, 33 C. C. A. 255, decided by the Circuit Court of Appeals of the Sixth Circuit, Dittgen v. Racine Paper Goods Co. (C. C.) 181 Fed. 394, and the opinion of Judge Hough in General Chemical Co. v. Blackmore (C. C.) 156 Fed. 968, support the view I have taken. In General Chemical Co. v. Blackmore, supra, Judge Hough said:

"I think that the plain language of Rev. St. § 4918 (U. S. Comp. St. 1901, p. 3394), authorizes the court in an action such as this to declare 'either of the patents (in suit) void in whole or in part,' and does not confine the decision to invalidity for any especial reason; the only limitation of the statutory power being that the adjudication shall not 'affect the right of any person except the parties to the suit and those deriving title under them subsequent to the rendition' thereof. * * * I think it clearly the duty of the court upon establishment of an interference to investigate and decide any question concerning the validity of either of the patents raised by the pleadings in the case."

Not only do the better-reasoned cases support the construction of section 4918, supra, which I have adopted, but I have no doubt that everything is to be gained in deciding all questions between the parties relating to the validity of their patents in a single suit. As was said by the Circuit Court of Appeals in Palmer Pneumatic Tire Co. v. Lozier, supra:

"* * * Section 4918 necessarily involves the presence of a patentable invention as the subject-matter of the litigation, and * * * the court cannot close the door to all inquiry as to whether such subject-matter for controversy exists. The court is, by the terms of the statute, empowered, as the sequel to its inquiry, to determine either of the patents void in whole or in part."

Futhermore, in the present suit, I think the complaint sets up an ordinary cause of action for infringement, as well as a cause of action under section 4918. There can be no objection under rule 26 of the new equity rules (198 Fed. xxv, 115 C. C. A. xxv) to the joinder of these

causes of action, and the matters alleged in paragraphs 15, 16, 17, 18, 19, and 20 are good defenses to a cause of action for infringement.

For the foregoing reasons, the motion to strike out is granted as to paragraph 11 of the answer, and denied as to paragraphs 13, 14, 15, 16, 17, 18, 19, and 20.

MARCONI WIRELESS TELEGRAPH CO. OF AMERICA v. SIMON.

(District Court, S. D. New York. November 18, 1915.)

1. INJUNCTION ⟹137—PRELIMINARY INJUNCTION—GROUNDS FOR DENIAL.

An injunction pendente lite is always of grace and not of right, and will not be granted where it would be prejudicial to public or governmental interests.

[Ed. Note.—For other cases, see Injunction, Cent. Dig. §§ 307-309; Dec. Dig. ⟹137.]

2. PATENTS ⟹287—APPROPRIATION OF LICENSE BY UNITED STATES—CONTRACTOR FOR MAKING DEVICE FOR GOVERNMENT—LIABILITY FOR INFRINGEMENT.

Act June 25, 1910, c. 423, 36 Stat. 851 (Comp. St. 1913, § 9465), which provides that the owner of a patent covering an invention which shall be used by the United States without license may recover reasonable compensation for such use by suit in the Court of Claims, in effect provides for the appropriation by the government, by right of eminent domain, of a license to use any patented invention, which includes also the right to make the patented device; and, having such right, the government may contract for the making of all or any part of the same, and the contractor is protected against liability for infringement, the owner of the patent being limited to the remedy provided by the statute.

[Ed. Note.—For other cases, see Patents, Cent. Dig. §§ 457-459; Dec. Dig. ⟹287.]

In Equity. Suit by the Marconi Wireless Telegraph Company of America against Emil J. Simon. On motion for preliminary injunction, and counter motion by defendant to dismiss. Injunction denied, and motion to dismiss sustained, subject to condition.

Plaintiff moves for preliminary injunction in action on Marconi patent No. 763,772, with counter motion by defendant to dismiss the bill, as well as to deny the injunction, because: (a) Defendant is a resident of the Eastern district of New York; and (b) whatever infringement or use of the patented device in suit he has committed or made has been and will be by and through the construction of certain radio apparatus for the United States of America at the request of the Navy Department in accordance with plans and specifications laid down by that department and embodied in a contract with said department.

John W. Griggs and L. F. H. Betts, both of New York City, for plaintiff.

Walter H. Pumphrey, of New York City, for defendant and for Secretary of the Navy.

HOUGH, District Judge. The appearance of counsel representing the Navy Department is as amicus. The United States is not a party to this suit, but it is in my opinion competent for the government,

even in the most informal way, to intervene for the purpose of showing the interest of the public in what, upon its face, is an action between private parties.

The defendant's motion to dismiss the bill on the ground that he is sued in the wrong district must be denied, if the record is to stop here. So far as affidavit making goes, I think it shown by a present fair preponderance of evidence that the defendant has in the past usually resided within the Southern district, has always maintained an office here, and had and owned the sample set of apparatus (which is the infringement) within the Southern district shortly before suit. Under accepted practice the defendant can either appear, reserving his rights, and make the matter of residence an issue in the cause, or he may move for a reference in limine.

[1] Owing quite probably to my own interest in the unusual matters argued at bar, the discussions of counsel have extended over a wider range than an examination of the record renders necessary. If it be assumed that the action is well brought, that defendant is an infringer, and that his status as a contractor with the United States government affords him no protection, statutory or otherwise, it does not necessarily follow that a preliminary injunction should issue. An injunction, and especially one pendente lite, is always of grace and not of right. A complainant, however meritorious, may be sent over to final hearing, and even left to his accounting, rather than awarded a permanent injunction, for reasons which bear little, if any, relation to the merits of the controversy as between parties plaintiff and defendant.

Such is the case here. The Navy Department has by contract employed Simon to construct radio apparatus, without which certain vessels of war now approaching completion cannot go into commission. If Simon does not complete the articles for which he has contracted, injury to the military arm of the government will result. In the language of the Assistant Secretary of the Navy:

> "Interference by injunction * * * with the fulfillment by Simon * * * of his contract with this department * * * would embarrass the department * * * and be detrimental to the interests of the naval service."

It is regrettable that this official opinion is contained in a letter to the court, not made a part of the moving papers, though now added to them by me. But the method by which one is advised of matters affecting the public welfare cannot prejudice the commonwealth. Therefore, because upon the assumption that Simon is an infringer the ordinary remedy against him would injure an arm of the government of the greatest immediate importance, no injunction will issue in any way interfering with the contract now existing between Simon and the United States. Without commenting further upon matters political rather than judicial, the case is within the exception recognized by Clifford, J., in Brady v. Atlantic Works, Fed. Cas. No. 1,794.

The motion to dismiss this bill, upon the ground that Simon, as a contractor with the government for articles infringing a patent of the United States, is protected by the "Act to provide additional protection for owners of patents of the United States and for other pur-

poses," approved June 25, 1910, raises a question of grave importance to private parties. In times of trouble, at periods when the arm of the government is in need of strengthening, the executive may be left in the exercise of powers, perhaps doubtful as matter of law, but temporarily necessary for national safety, by the refusal of drastic relief, and the remission of private litigants to slower processes of procuring pecuniary recompense. Such procedure, however, is temporary, and contributes nothing to the settlement of questions likely to be vexed in times when the asserted rights of private parties receive their ordinary measure of prompt recognition. In a suit on this patent before Veeder, J., in the Eastern district of New York, this question was suggested, but not necessarily involved. It was therefore not passed upon (Marconi Wireless Co. v. Fritz Lowenstein, memorandum, not for publication, October 1, 1914). Here the point cannot be evaded, because defendant has accepted all the statements contained in plaintiff's moving papers relating to the patent and its construction and the manufacture of Simon's apparatus, and upon these documents, all emanating from plaintiff, the motion to dismiss is made.

I think such a defense might have been set up by plea under the former practice, and may now be made by motion under equity rule 29 (198 Fed. xxvi, 115 C. C. A. xxvi). The material facts which would formerly have been asserted by plea or proven by evidence under the plea are these: Plaintiff is the owner, with good right to sue thereon, of a valid patent of the United States. Certain officers of the United States Navy drew plans and specifications for part of a radio apparatus which it was physically impossible to comply with except by infringing (outright or by contribution) the aforesaid patent of the plaintiff. Duly authorized governmental authority then invited bids upon said plans and specifications. All bidders, as well as the draughtsmen of said plans and specifications, were well aware of the existence of plaintiff's patent, and there must be conclusively imputed to them an intention to infringe or at least to perform acts which would constitute infringement in a private person.

Several parties bid for the contract under the plans aforesaid, including two licensees of this plaintiff. Simon was not the lowest bidder, but he was, in the opinion of the naval authorities, the best bidder, in that the apparatus devised or "laid out" by him was in compactness, strength, adjustment, and other purely mechanical attributes the best device offered. For this reason Simon's bid was accepted. He made and submitted to the laboratory at the Brooklyn Navy Yard one specimen or model of his apparatus. The making thereof is the act of infringement alleged, and the fulfillment of his contract by multiplying similar apparatus up to the limit of the contract is what is sought to be prevented by preliminary and final injunction.

It thus appears that there is an element of personal skill and mechanical superiority involved in Simon's machinery. This explains the action of the naval authorities; but it does not, as between private parties, affect in any way the question of infringement. Viewed without regard to the act of 1910, certain officers of the government deliberately committed the United States to an infringement of private rights; i. e., an appropriation of private property. Pursuant to this intent they

invited private citizens to assist in this contemplated infringement, and Simon consented to aid by manufacturing a compact and well-arranged infringing article. There is no proof (and in the nature of this motion there can be no final proof) that Simon is engaged in no other business than fulfilling this contract with the United States; but plaintiff has asserted in its own affidavits that he (Simon) has often so stated. It is equally true that there is no evidence or suggestion of any other infringement, present or contemplated, except that arising under the government's contract aforesaid.

Under these facts the position is taken by defendant that he is an employé, agent, or the like, of the United States. This cannot, I think, be sustained. He is an independent contractor; i. e., a person held at arm's length by the department with which he has contracted, one who gives bond, not for his general good conduct, but for the fulfillment of his contract, who may bring an action in the Court of Claims for any balance that he considers to be unpaid thereunder, and who may be sued, if he does not fulfill his obligation, not for malfeasance in office, but for breach of contract.

[2] The questions therefore become the following: (1) What is the legal position of the sovereign in respect of patent rights granted by itself under the act of 1910? (2) How does that act, or more accurately the legal position of the United States thereunder, affect or protect an independent contractor?

So far as the first query is concerned, it has been fully and finally answered by Crozier v. Krupp, 224 U. S. at page 305, 32 Sup. Ct. at page 491, 56 L. Ed. 771, which holds that, having regard to "the undoubted authority of the United States as to such subjects [as patents] to exercise the power of eminent domain, the statute * * * provides for *the appropriation of a license to use the inventions;* the appropriation thus made being sanctioned by the means of compensation for which the statute provides."

It may in some sense be true, as is urged by the plaintiff, that the act is remedial and does not disturb any of the rights of a patentee which existed before its passage. But it is also true that, if the act creates a legal status, the relation of the holder of that status to the rest of the world is affected by the statute, whether such change or modification of relation be specifically mentioned or described in the act or not.

The Supreme Court has defined the somewhat inartificial language of the statute. What the act contemplates being done by the United States is to *use* an invention "described in and covered by a patent." This is held to be equivalent to the expropriation or appropriation of a "license to use the inventions." This means a license in its widest sense; i. e., both to make and to use, and possibly to sell, but certainly both to make and to use.[1]

[1] It is inconceivable that the government could or would sell for gain patented articles which it had manufactured or caused to be manufactured. But can it be doubted that articles covered by a patent, used and then sold after condemnation by governmental authority, would lawfully pass into the hands of the purchaser? In this sense, at least, the appropriated license is one to sell.

In this instance the Navy, through its officers, has appropriated by right of eminent domain a license to make and use any and all articles covered by the patent in suit. It could plainly make them in its own yards or other work places by its hired employés or permanent officers. It could take Simon into its employment at a stated stipend, and it could even make that stipend the exact amount of his estimated profit under the contract. If this had been done, the plaintiff could certainly do nothing but institute an action in the Court of Claims. Simon would be as immune as an admiral. However repugnant to business and professional feeling this method of riding roughshod over the rights of a patentee may be, it is difficult for me to perceive that there is any substantial difference between what the government admittedly might have done and what it has done in respect of this contract. Any distinction drawn between doing an infringing job by day's work and doing the same job by contract is without substance.

But it is said (and here hangs the plaintiff's whole case) that before the act of 1910 the holder of a patent could sue a contractor with the government for infringement as fully and freely as he could any one else, provided always that he did not by injunction or otherwise interfere with governmental possession of anything (however obnoxious to the patentee's rights) actually in governmental use. Brady v. Atlantic Works, supra; International, etc., Co. v. Cramp, 211 Fed. 124, 127 C. C. A. 522, and cases therein cited. In my opinion this is true, but not so as to the corrollary stated by plaintiff, viz., that since this right existed before the act of 1910, and is not explicitly taken away by that statute, it must still survive as fully as of old. If the reason of the law fails, the law ought to fail with it; this maxim seems to me to apply very forcibly here. The reason for permitting actions for infringement by private parties against government contractors was that since infringement was a *tort,* and the United States had never consented to be sued *in tort,* patentees were without remedy. Now they have such remedy under the statute, and cannot take what the statute gives (or imposes) and retain what they had before, if it interferes with governmental enjoyment of its license.

The United States has a license under this patent to make, use, and perhaps to sell, to any extent deemed beneficial to the commonwealth, and without any territorial or other limitation upon its right. A licensee to make and use is not (in the absence of specific language in his license) limited to making with his own hands, in his own shop, or by his own employés. He may employ, procure, or contract with as many persons as he chooses to supply him with that which he may lawfully use, provided such conduct does not change his relation to the licensor. In my opinion this is exactly what the government has done here, and Simon is not an infringer because he is supplying lawful goods to a lawful licensee. Foster Hose Supporter Co. v. Taylor Co., 191 Fed. 1003, 111 C. C. A. 667.

There is another and more technical view of the facts, viz.: What Simon contracted to furnish to the Navy Department is not a complete wireless apparatus, nor even a complete transmitting device, but only certain transmitter parts. The parts (to Simon's knowledge) could

never be used without uniting them with other devices not made or furnished by Simon, but well known in the art; and the whole apparatus, when assembled as intended by the Navy (to defendant's knowledge), would constitute a Marconi system. Therefore Simon should be regarded (if the matter were one in which the government had no interest) as a *contributory* infringer. "The essence of contributory infringement lies in concerting or plotting with others in an *unlawful* invasion of the patentee's rights." Goodyear, etc., Co. v. Jackson, 112 Fed. at page 148, 50 C. C. A. at page 161, 55 L. R. A. 692. Simon did agree with the naval authorities to contribute toward what would ordinarily be an infringement, but the United States could not infringe by using what Simon made because it was a licensee. Therefore Simon could not be a contributory infringer by assisting in doing a lawful thing. Bullock v. Westinghouse, 129 Fed. 105, 63 C. C. A. 607. On this view of the facts the conclusion urged by defendant is logical.

No injunction will issue. The motion to dismiss is granted, unless plaintiff elects in 20 days to plead over and allege infringements not arising from governmental contracts. If such election is made, defendant to answer in 20 days after amended bill filed.[2]

PENNSYLVANIA R. CO. v. UNITED STATES et al. (two cases).

(District Court, W. D. Pennsylvania. November 8, 1915.)

Nos. 38, 39.

COMMERCE ⟹85—POWERS OF INTERSTATE COMMERCE COMMISSION—ORDER REQUIRING RAILROAD COMPANY TO PROVIDE AND FURNISH TANK CARS.

Under Interstate Commerce Act Feb. 4, 1887, c. 104, § 1, 24 Stat. 379, as amended by Act June 29, 1906, c. 3591, § 1, 34 Stat. 584 (Comp. St. 1913, § 8563), which defines "transportation" as including cars, and provides that "it shall be the duty of every carrier * * * to provide and furnish such transportation upon reasonable request therefor," such duty to provide and furnish cars is no broader than that imposed by the common law, and the act does not empower the Interstate Commerce Commission, upon a determination that such cars are reasonably necessary to a proper car service, to order a railroad company to provide and furnish tank cars for use by an oil refinery, where the company does not possess such cars, or not in number sufficient to meet the requirement.

[Ed. Note.—For other cases, see Commerce, Cent. Dig. § 138; Dec. Dig. ⟹85.

For other definitions, see Words and Phrases, First and Second Series, Transportation.]

Thomson, District Judge, dissenting.

In Equity. Petitions by the Pennsylvania Railroad Company against the United States and the Crew-Levick Company, and against the United States and the Pennsylvania Paraffine Works, for injunctions suspending orders of the Interstate Commerce Commission. Injunctions granted.

[2]NOTE.—Plaintiff elected not to plead over, and has appealed from a decree of dismissal.

Petition for an interlocutory order or preliminary injunction restraining and suspending, until the final determination of this cause, an order of the Interstate Commerce Commission, requiring the Pennsylvania Railroad Company to cease and desist from pursuing certain practices found to be in violation of the provisions of the act to regulate commerce. Motion to dismiss the petition.

The refined oil product of this country is carried and transported in tank cars, by pipe lines and by rail in barrels or similar containers.

The cost of carrying oil in barrels is 3½ cents a gallon above the cost of carrying it in tank cars, due to freight charges on the weight of the barrels and to the added cost of handling, maintenance and replacement, making shipment by this method expensive, if not prohibitive.

Ninety-one per cent of the refined oil product is carried in tank cars, the remainder being carried by pipe lines and by rail in barrels. The oil carried in tank cars is consigned and shipped almost exclusively in privately owned tank cars, that is, tank cars owned by or leased to the shipper, for the use of which the carrier pays wheelage. The number of tank cars in the United States is 40,000. The number of privately owned tank cars east of the Mississippi River is 27,700. The Pennsylvania Railroad Company owns 499. Other carriers east of the Mississippi River own in the aggregate 303. Some carriers own none.

Fifty-two kinds of articles, used for food and in the arts, are shipped in tank cars. Differences in the nature and uses of the articles make impossible the interchange of tank cars for their shipment.

The Pennsylvania Railroad Company publishes rates for the transportation of oil in tank cars, and furnishes tank cars within the limit of its supply.

The oil refineries of the Pennsylvania Paraffine Works and Crew-Levick Company are situated in the state of Pennsylvania and are served by the Pennsylvania Railroad Company and the New York Central Railroad Company. The Pennsylvania Paraffine Works ships monthly about 750,000 gallons of refined oil, of which 91 per cent. moves in tank cars, 1½ per cent. in barrels and the remainder in pipe lines.

Crew-Levick Company ships monthly about 500,000 gallons of refined oil, of which 86 per cent. moves in tank cars and about 5 per cent. in barrels, and the remainder in pipe lines. The former company owns 54 tank cars and the latter company 57.

It developed in the testimony that the tank cars furnished by the railroad company, in addition to the complainants' privately owned tank cars, were not at all times sufficient to meet the requirements of the complainants' business. During a specimen period, it appears that of the monthly shipments of the product of the former company, 83 carloads were carried in its privately owned tank cars and 13 carloads in tank cars furnished by the railroad company; and of the monthly shipments of the product of the latter company, 70 carloads were carried in its privately owned tank cars and 12 carloads in tank cars provided by the railroad company.

The tank cars owned by the two companies, together with their pro rata share in the distribution of the tank cars of the railroad company, being inadequate for their requirements, and conceiving it to be the duty of the railroad company to furnish tank cars of the type and in the number required, the two companies demanded of the Pennsylvania Railroad Company a sufficient number of tank cars in which to ship their monthly product. To this demand the railroad company replied, "We beg to say that the railroad company is not prepared to increase its present tank car equipment, but is prepared to transport the commodity, when properly contained in barrels or other similar containers, at rates that are fair, reasonable and non-discriminatory." Whereupon complaints were lodged with the Interstate Commerce Commission, a hearing held, and the following order made:

"It is ordered, that the Pennsylvania Railroad Company be, and it is hereby, notified and required to cease and desist on or before August 15, 1915, and thereafter to abstain, from refusing upon reasonable request and reasonable notice therefor to provide and furnish tank cars to the complainants herein for interstate shipments of petroleum products, which re-

fusal has been found in said report to be in violation of the provisions of the act to regulate commerce and amendments thereto.

"It is further ordered, that said defendant be, and it is hereby, notified and required to provide, on or before August 15, 1915, and thereafter to furnish, upon reasonable request and reasonable notice, at complainants' respective refineries, tank cars in sufficient number to transport said complainants' normal shipments in interstate commerce.

"And it is further ordered, that this order shall continue in force for a period of not less than two years from the date when it shall take effect."

After securing an extension of the order, the railroad company filed its petition in this court, praying that a preliminary injunction be entered restraining and suspending the order of the Interstate Commerce Commission. The Government moved to dismiss the petition. The motion and the petition were heard together.

Henry Wolf Bikle, of Philadelphia, Pa., and Thomas Patterson, of Pittsburgh, Pa. (Patterson, Crawford & Miller, of Pittsburgh, Pa., on the brief), for complainant.

Blackburn Esterline, Sp. Asst. Atty. Gen., of Chicago, Ill. (E. Lowry Humes, U. S. Atty., of Pittsburgh, Pa., on the brief), for the United States.

Edward W. Hines, of Washington, D. C. (Joseph W. Folk, of Washington, D. C., on the brief), for Interstate Commerce Commission.

George E. Spring, of Franklinville, N. Y., and C. D. Chamberlin, of Cleveland, Ohio, for Crew-Levick Co.

Before WOOLLEY, Circuit Judge, and ORR and THOMSON, District Judges.

WOOLLEY, Circuit Judge (after stating the facts as above). The proceeding now before the court was instituted and conducted under section 13 of the act to regulate commerce (Comp. St. 1913, § 8581), giving to any person complaining of anything done or omitted to be done by a common carrier in contravention of the provisions of the act, the right to apply to the Interstate Commerce Commission for redress; and after a finding adverse to the carrier, the order entered was made under section 15 of the act, which provides in effect that whenever, after hearing, the Commission shall be of opinion that a practice of a carrier is unjust or unreasonable or unjustly discriminatory or unduly preferential or prejudicial or otherwise in violation of any of the provisions of the act, the Commission is authorized and empowered to determine and prescribe what practice is just, fair and reasonable, and to order the carrier to cease and desist from the unlawful practice, and thereafter to conform to and observe the regulation or practice prescribed, under penalty of five thousand dollars for each offense.

The practice of the railroad company found by the Commission in this instance to be violative of the statute, is not that the railroad company discriminated against the shipper by an unequal distribution of tank cars. It is conceded that the Commission may require a carrier to desist from a discriminatory practice in car distribution. This is one of the admitted powers of the Commission to be exerted over a carrier in the use of the instrumentalities which it possesses. What

the Commission found was that the railroad company was guilty of an unjust and an unreasonable practice in not possessing or in not acquiring and furnishing tank cars in sufficient number to meet the requirements of the complainants' business.

The question in this case, in the abstract, is whether the act to regulate commerce as amended, imposes upon a carrier the duty to acquire and to provide and furnish transportation of a type that, physically or economically, is best adapted to the needs and uses of the shipper, of which the Interstate Commerce Commission is the judge. The precise question is whether the Interstate Commerce Commission has power to compel the Pennsylvania Railroad Company to purchase and acquire tank cars for the shipment of oil, and to provide the same to complaining shippers upon requests which the Commission may adjudge reasonable.

For the validity of its order, the Interstate Commerce Commission relies upon several provisions of the act to regulate commerce as amended, and upon certain changes and differences in the act created by its amendments. The first section of the act, both in its original and amended state, contains definitions of different branches of the subject with which the act deals. The terms "common carrier," "railroad" and "transportation" are, by express language, given their statutory meaning. Section 1 of the act of 1887 provides that "the term 'transportation' shall include all instrumentalities of shipment or carriage." As amended by the act of 1906, the term "transportation" is enlarged and is made to "include cars and other vehicles and all instrumentalities and facilities of shipment or carriage, irrespective of ownership or of any contract, express or implied, for the use thereof and all services in connection with the receipt, delivery, elevation, and transfer in transit, ventilation, refrigeration or icing, storage, and handling of property transported." Having stated of what transportation consists, the section prescribes it to "be the duty of every carrier * * * to provide and furnish such transportation upon reasonable request therefor."

Excerpts from several opinions of the Supreme Court were cited in support of the Government's contention that a railroad company, holding itself out as a carrier, is under a legal obligation arising out of the fact of its employment, to provide transportation means and facilities commensurate with the demands of shippers, without regard to whether they possess them or have the money with which to acquire them. These excerpts were, of course, not cited as decisive of the question in issue, because upon examination it is disclosed that the cases from which they were taken were decisive of matters altogether different. These expressions of the Supreme Court, standing alone and considered without reference to the facts of the cases in which they appear, seem to support the Government's contention, but an examination of the cases discloses that the suitable and necessary means and facilities which the Supreme Court has said the carrier must provide, have especial reference and relation to the facts of those cases, which in nearly every instance present questions of discrimination or of "service in connection with the receipt, delivery, elevation and transfer in

transit, ventilation, refrigeration or icing, storage and handling of property transported," as specifically provided by the statute. In none of them was the question raised or decided nor in any did the Supreme Court reveal its opinion as to whether there devolved upon a carrier a statutory duty to provide and furnish transportation of a type it did not possess, or to acquire such transportation in order to provide and furnish the same upon reasonable request. Railroad Co. v. Pratt, 22 Wall. 123, 128, 22 L. Ed. 827; Covington Stockyards Co. v. Keith, 139 U. S. 128, 133, 11 Sup. Ct. 469, 35 L. Ed. 73; Arlington Heights Fruit Exchange v. Southern Pacific Co., 20 Interst. Com. Com'n R. 106, affirmed by the Supreme Court in Atchison Ry. Co. v. United States, 232 U. S. 199, 34 Sup. Ct. 291, 58 L. Ed. 568; Chicago, Rock Island & Pacific Ry. Co. v. Hardwick Farmers' Elevator Co., 226 U. S. 426, 33 Sup. Ct. 174, 57 L. Ed. 284, 46 L. R. A. (N. S.) 203; Missouri, Kansas & Texas Ry. Co. v. Harris, 234 U. S. 412, 418, 34 Sup. Ct. 790, 58 L. Ed. 1377; Yazoo & Mississippi Valley R. R. Co. v. Greenwood Grocery Co., 227 U. S. 1, 33 Sup. Ct. 213, 57 L. Ed. 389; St. Louis, Iron Mountain & Southern Ry. Co. v. Edwards, 227 U. S. 265, 33 Sup. Ct. 262, 57 L. Ed. 506; Hampton v. St. Louis, Iron Mountain & Southern Ry. Co., 227 U. S. 456, 33 Sup. Ct. 263, 57 L. Ed. 596; Penn Refining Co. v. Western New York & Pennsylvania R. R. Co., 208 U. S. 208, 28 Sup. Ct. 268, 52 L. Ed. 456; Texas & Pacific Ry. Co. v. Abilene Cotton Oil Co., 204 U. S. 426, 27 Sup. Ct. 350, 51 L. Ed. 553, 9 Ann. Cas. 1075; Baltimore & Ohio R. R. Co. v. United States ex rel. Pitcairn Coal Co., 215 U. S. 481, 30 Sup. Ct. 164, 54 L. Ed. 292.

There is thus presented for decision, with little if any aid from previous deliverances by the courts, the original question which divided the Interstate Commerce Commission in this case and in the case of Vulcan Coal & Mining Co. v. I. C. R. R. Co., 33 Interst. Com. Com'n R. 52, whether the duty imposed upon a carrier to provide and furnish cars to the shipper is the duty imposed by the common law or is a different and a broader duty prescribed by the statute, and whether the power of the Interstate Commerce Commission to prevent undue preference and unjust discrimination in the use of a carrier's cars has been enlarged and expanded into a power to control the "practice" of carriers, by determining and prescribing the type and character of "all [their] instrumentalities and facilities of shipment or carriage," in order to procure for the shipper a better, safer and more economic transportation service.

In seeking the authority of the Commission to make the order in controversy, we have nothing to do with the merit of the order, the injustice of the practice found to exist, or the wisdom of the practice established (Texas & Pacific Ry. Co. v. I. C. C., 162 U. S. 197, 219, 16 Sup. Ct. 666, 40 L. Ed. 940; I. C. C. v. Alabama Midland Ry. Co., 168 U. S. 144, 170, 18 Sup. Ct. 45, 42 L. Ed. 414); nor have we anything to do with the effect of the order upon private car lines. We are concerned only with the law under which the order was made and the Commission acted, assuming its finding of fact to be conclusively correct (I. C. C. v. Illinois Central Ry. Co., 215 U. S. 452, 30 Sup.

Ct. 155, 54 L. Ed. 280; Baltimore & Ohio R. Co. v. United States ex rel. Pitcairn Coal Co., 215 U. S. 481, 30 Sup. Ct. 164, 54 L. Ed. 292; Pennsylvania Co. v. United States, 236 U. S. 351, 361, 35 Sup. Ct. 370, 59 L. Ed. 616).

The question of the duty of the carrier and the correlative question of the Commission's power to enforce the performance of that duty, as they are presented in this case, had their rise in a change in the definition of the term "transportation" made by the amendment of 1906. Section 1 of the original act prescribed that "the term 'transportation' shall include all instrumentalities of shipment or carriage." Instrumentalities of shipment of course include cars, and cars have been treated as such from the date of the act to the date of its amendment in 1906. But in Scofield v. Lake Shore & Michigan Southern Ry. Co., 2 Interst. Com. Com'n R. 67, 76, 4 Interst. Com. Com'n R. 158, the Interstate Commerce Commission considered that the sole duty of a carrier to furnish cars was that imposed by the common law, and that the statute creating the Commission did not clothe it with power to determine the instrumentalities of shipment to be employed by a carrier or to require a carrier to use in its business the kind and number of cars which the Commission may deem necessary for a proper car service. In discussing this case, the Commission said:

> That "the power if it should be held to exist at all, on the part of the Interstate Commerce Commission to require a carrier to furnish tank cars when that carrier is furnishing none whatever in its business, would apply equally to sleeping cars, parlor cars, fruit cars, refrigerator cars, and all manner of cars as occasion might require, and would be limited only to the necessities of interstate commerce and the discretion of the Interstate Commerce Commission. A power so extraordinary and so vital, reached by construction, could not justly rest upon any less foundation than that of direct expression or necessary implication, and we find neither of those in the statute."

It is contended, however, that by the amendatory act of 1906, changing the definition of the term "transportation," there is such direct statutory expression conferring such extraordinary power, and that the measure of duty theretofore resting upon the carrier to furnish cars was changed from a common law duty, with resort to the courts for its violation, to a statutory duty, with redress for its violation by the Interstate Commerce Commission. The act of 1906 as before quoted, prescribes that "the term 'transportation' shall include cars and other vehicles and all instrumentalities and facilities of shipment or carriage" and certain defined services to be rendered in connection therewith. The services defined are the principal additions to the definition, and relate to the receipt, delivery, transfer, ventilation, refrigeration, storage, and handling of property transported. With these we have nothing to do in this case, except to note that they constitute the principal, if not the entire, additions to the old definition, and are subject matters of the Commission's control not embraced in the original act. While the word "cars" was not used in the definition of transportation as contained in the original act, it has never been doubted that in the words "instrumentalities of shipment" and within the term "transportation," cars were included.

The definition of the term "transportation" as it appears in the amendment of 1906, so far as it relates to cars, does nothing more than express what was implied in the original definition and contains nothing which suggests that in furnishing transportation there shall rest upon the carrier a duty to furnish cars of a kind different from those required of the carrier under the original act.

We find no case prior to the amendatory act of 1906 which questioned that cars were instrumentalities of shipment or carriage. If such a question existed, then the act of 1906 naming cars as one of the instrumentalities of shipment, might have been a change with a purpose, creating a difference in legal effect.

In seeking the effect of the amendment of 1906, inquiry may be made with respect to the purpose of Congress in enacting it. It is apparent from the addition to the definition of "transportation" contained in the amendment, that Congress intended and clearly succeeded in including within that term certain services which, theretofore, had not been embraced within it and over which Congress deemed it advisable that the Interstate Commerce Commission should have power and control. These were ventilation, refrigeration, icing, storage and handling of property transported. This power was conferred upon the Commission for the avowed purpose, among others, of relieving the shipper of the task and annoyance of dealing with more than one person. These were new matters and therefore were additions to what was meant by transportation, as defined in the original act. But the addition of the word "cars" in the amendment made no addition to the definition in the original act, because cars were already embraced within it.

We find nothing in the original or amended act which, by express language, imposes upon a carrier the extraordinary duty or confers upon the Interstate Commerce Commission the extraordinary power claimed by the government in this proceeding. If they exist, they can be found only by implication, and it is doubtful if Congress would leave to implication an intention to impose so onerous a duty and to grant so great a power. On the other hand, we find in the act, by clear expression, duties imposed upon carriers which are not absolute in their nature, but are qualified by the ability of the carriers to conform to the duties prescribed.

The provision of the act requiring a carrier to maintain and operate switch connections with lateral or branch line railroads, appearing in the last paragraph of the first section of the act, imposes upon a carrier the duty to "furnish cars for the movement of such traffic *to the best of its ability* without discrimination in favor of or against any such shipper." The words, "to the best of its ability," of course, qualify the duty to maintain switch connections, and do not qualify the prohibited discrimination.

Again, in section 3 of the act (Comp. St. 1913, § 8565), it is provided that:

"Every common carrier * * * shall, according to their respective powers, afford all reasonable, proper, and equal facilities for the interchange of traffic between their respective lines, and for the receiving, forwarding, and delivering of passengers and property."

Here again, the carriers' duty to provide and furnish facilities of transportation is not absolute. The duty is laid upon them "according to their respective powers." Such expressions rather raise the implication that Congress did not intend to place an absolute and unqualified duty upon carriers to furnish cars of a certain type whether they had them or not, and if they did not have them then to acquire them whether they had the money or not. Restricting our construction of the act to its words, and finding nothing by implication that changes or qualifies their meaning, we are of opinion that the amendment of 1906, including cars within the definition of "transportation," added nothing to the original duty of the carrier as prescribed by the original act and as interpreted by the Commission, and vested in the Commission no increase of power over cars as instrumentalities of shipment. If, under the act as amended, no different or greater duty is imposed upon a carrier with respect to furnishing and providing cars than was prescribed by the original act, then the practice of the carrier found unlawful in this case was not in violation of the statute, and the order of the Commission, directing the carrier to desist from that practice, was an exercise of power not conferred by law.

The act to regulate commerce does not confer upon the Interstate Commerce Commission all power over cars and other instrumentalities of shipment. Congress has reserved unto itself, and from time to time has exercised, power to control and regulate certain instrumentalities of shipment, notably by the acts establishing the standard height of draw bars, prescribing safety appliances and regulating the hours of service of the carriers' employés. But aside from special enactments of this class, federal legislation regulating commerce, in so far at least as it is contained in the act of 1887 and its amendments, has thus far left carriers free to exercise their own judgment in the purchase, construction and equipment of their roads and in the selection of their rolling stock. By this legislation, federal control has been assumed over the use to which the carriers' roads and equipment are put, to the end that the flow of commerce, in the employment of those instrumentalities, may not be impeded, and that unjust rates shall not be charged and unfair practices pursued to the injury of persons and localities. The law clearly confers upon the Commission power to so regulate the use of the facilities possessed by the carrier that there shall be no unjust discrimination, but we find nothing in the law which confers upon the Commission power to compel a carrier to acquire facilities it does not possess or to acquire better facilities than those it possesses, not with the object of preventing discrimination and preferences, but in order that the shipper may have larger, better, and perhaps more economical facilities. We are of opinion that in making the order, the Interstate Commerce Commission exceeded its statutory power, and that the order should be suspended and annulled in accordance with the prayer of the petition.

THOMSON, District Judge (dissenting). Finding myself unable to concur in the conclusion reached by the majority of the court, I have thought proper, in view of the importance of the case, to briefly assign the reasons which control my judgment.

We have nothing to do with the wisdom of the order. The findings of the Commission are presumed to be true, and to have justified its action, if only the power to exercise it exists. On this question of power alone, the Commission was divided. If there rested no legal duty on the carrier to provide the transportation called for, it follows that the Commission was without power to make the order in question. The conclusion of the court adverse to the action of the Commission, is concisely set forth in the concluding portion of the majority opinion thus:

"The law clearly confers upon the Commission power to so regulate the use of the facilities possessed by the carrier that there shall be no unjust discrimination, but we find nothing in the law which confers upon the Commission power to compel a carrier to acquire facilities it does not possess or to acquire better facilities than those it possesses, not with the object of preventing discrimination and preferences, but in order that the shipper may have larger, better, and perhaps more economical facilities."

This is the issue, and the solution of the question must be found mainly in the proper interpretation of the term "transportation," as used in the amendment of 1906.

In the original act of February 4, 1887, it is said:

"The term 'transportation' shall include all instrumentalities of shipment or carriage."

These words are clearly comprehensive enough to include cars as an instrument of shipment. But we need not stop to conjecture as to their full breadth and meaning. It is sufficient that Congress thought proper to enlarge the scope of the term "transportation" by providing in the act of 1906 as follows:

"The term 'transportation' shall include cars and other vehicles and all instrumentalities and facilities of shipment or carriage, irrespective of ownership or of any contract, express or implied, for the use thereof, and all services in connection with the receipt, delivery, elevation and transfer in transit, ventilation, refrigeration or icing, storage and handling of property transported, and it shall be the duty of every carrier subject to the provisions of this act to provide and furnish such transportation upon reasonable request therefor, and to establish through routes and just and reasonable rates applicable thereto."

This, instead of being a concise and accurate definition of the term "transportation," is rather a legislative declaration of what the term shall include. Much broader than the words, "all instrumentalities of shipment and carriage," in the original act, are the words of the amendment, "cars and other vehicles and all instrumentalities and facilities of shipment or carriage." The very comprehensive words "*facilities* of shipment and carriage" were a significant addition to the original act. These words are again made more comprehensive by the words which follow:

"Irrespective of ownership or of any contract, express or implied, for the use thereof."

Whether held by the carrier by purchase, hire, exchange, lease, bailment, or any contract for their use, express or implied, they are to be regarded as the instruments of the carrier, and the shipper, as well

as the Commission, is thus relieved of the annoyance of dealing with more than one person. The scope of the term transportation is again enlarged by the use of the words:

"And all services in connection with the receipt, delivery, elevation and transfer in transit, ventilation, refrigeration or icing, storage and handling of property transported."

Having thus defined transportation, it is then declared to be the duty of every carrier, subject to the provisions of the act, to provide and furnish such transportation upon reasonable request therefor.

Whatever may have been the duty resting on a carrier at common law to furnish transportation for the shipper's property, it admits of no doubt that the furnishing of transportation, as defined by the act, has been made a clear statutory duty of the carrier. As was said by Chief Justice White in Chicago, R. I. & Pac. R. R. Co. v. Hardwick Elevator Co., 226 U. S. 426, 33 Sup. Ct. 174, 57 L. Ed. 284, 46 L. R. A. (N. S.) 203:

"The purpose of Congress to specifically impose a duty upon a carrier in respect to the furnishing of cars for interstate traffic is of course by these provisions clearly declared. * * * Not only is there then a specific duty imposed to furnish cars for interstate traffic upon reasonable request therefor, but other applicable sections of the act to regulate commerce give remedies for the violation of that duty."

It is plainly the duty of the carrier, not only to furnish cars on reasonable request, but to furnish cars reasonably suitable for the proper transportation of the freight to be shipped. This general proposition is stated by Hutchinson on Carriers, § 536, as follows:

"If the goods are of such a nature as to require for their protection some other kind of car than that required for ordinary goods, and cars adapted to the necessity are known and in customary use by carriers, it is the duty of the carrier, where he accepts the goods, to provide such cars for their carriage."

In Covington Stockyards Co. v. Keith, 139 U. S. 128, 11 Sup. Ct. 469, 35 L. Ed. 73, Justice Harlan, speaking for the Supreme Court, said:

"The railroad company, holding itself out as a carrier of live stock, was under a legal obligation, arising out of the nature of its employment, to provide suitable and necessary means and facilities for receiving live stock offered to it for shipment over its road and connections, as well as for discharging such stock after it reaches the place to which it is consigned. The vital question in respect to such matters is whether the means and facilities so furnished by the carrier or by some one in its behalf are sufficient for the reasonable accommodation of the public."

In the same opinion the court says:

"The carrier must at all times be in proper condition both to receive from the shipper and to deliver to the consignee, according to the nature of the property to be transported, as well as to the necessities of the respective localities in which it is received and delivered."

This case, assuming that proper facilities for the trasportation of the stock must be furnished, goes further, and extends the duty of the carrier to providing suitable means for its receipt and discharge.

If, then, it is the duty of the carrier on reasonable request to fur-

nish coal cars to the shipper of coal, stock cars to the shipper of live stock, fruit cars with refrigeration for the shipper of fruit, on no principle could the oil shipper be denied cars reasonably suited for the shipment of oil. The word "reasonable," as used in the act, is a qualifying and saving term. Not merely the demands and needs of the shipper are to be considered, but the circumstances of the carrier and the rights of the public as well. The fitness and efficiency of the transportation requested, whether the facilities of shipment would be made better and more economical, the public advantage to be derived therefrom, the cost and expense in relation to the benefit resulting, all the circumstances, time and place and means, as affecting the carrier and its ability to supply the transportation demanded—these and all other relevant matters may be considered in determining the reasonableness of the shipper's demand. If the request be reasonable, it is the legal duty of the carrier to comply with it; if unreasonable, no such duty devolves upon the carrier. And this question of fact, in case of dispute, the Commission must decide. Almost all duties are relative rather than absolute, and the exercise of a clearly vested power largely depends upon the facts which call for its exercise. Even the clearly expressed duty of the carrier to furnish cars on reasonable request is not absolute. Hampton v. St. L., Iron Mt. & S. Ry. Co., 227 U. S. 467, 33 Sup. Ct. 263, 57 L. Ed. 596. Thus the right of the shipper to demand transportation, on the one hand, is conditioned on the fact that his request be reasonable; and the duty, on the other, to comply is not absolute, but dependent on the facts of the case. We are not passing on some abstract proposition as to the power of the Commission to order, without restraint, the equipment and furnishing of cars, without reference to conditions or circumstances. We are passing on a concrete question based on specific facts, conclusively found by the Commission. It would be easy to imagine on the part of a shipper an unwarranted and unreasonable request, and on the part of the carrier an arbitrary and unjust denial of a reasonable demand. The Interstate Commerce Commission is the tribunal standing between the parties, with power to hear and determine, and especially competent by reason of experience to determine, with justness and uniformity of decision.

I cannot agree with the proposition that the duty imposed upon the carrier to furnish cars is limited to those which the carrier may have on hand, or that there is no obligation to acquire facilities it does not possess, or to acquire better facilities to meet the reasonable demands of the shippers. I base my conclusion on the words of the act itself:

> "It shall be the duty of every carrier subject to the provisions of this act to provide and furnish such transportation on reasonable request therefor."

No words more specific or definite than "provide and furnish" could have been chosen. I find no limitation of any kind in the act upon the duty thus imposed upon the carrier, except only that the request therefor be reasonable. There are no words from which it can fairly be assumed that existing ownership or control is a prerequisite to the carrier's duty to provide and furnish. From the explicit words

of the act, it would seem to follow that if a reasonable request is made for cars and the carrier does not possess them, it must acquire them for use, by one of the many methods for their acquisition. If not, this most important provision of the statute would be rendered largely nugatory. Perhaps the most effective blow which Congress could deal at discrimination in interstate traffic is the duty imposed on the carrier to furnish transportation. There could be no more prolific source of discriminatory practices than the right in the carrier to grant or withhold the means of transportation at its discretion. The demands of the favored shipper would be met by promptly acquiring and furnishing the transportation called for. "We do not have what you demand" would be a conclusive answer to the less favored. The flow of commerce is more vital, even, than that it be free from discrimination and preference. If the primary object of the act is to prevent discrimination, Congress evidently realized that the most effective method of prevention is to remove the opportunity for discrimination. We must assume that, if Congress had intended to set limitations on that duty, it would have done so in apt words, as it did with reference to other provisions of the act. For instance, the duty of the carrier to construct and operate switch connections with any lateral branch line of railroad, or private side track, is conditioned that such connection is reasonably practicable, and can be put in with safety, and will furnish sufficient business to justify the connection and maintenance of the same, and shall furnish cars for the movement of such traffic to the best of its ability. Again, the carrier's duty to furnish facilities for the interchange of traffic between their respective lines is qualified by the expression "according to their respective powers." It is highly significant, therefore, that the more important duty to furnish transportation has no limitation or condition, except upon the reasonable request of the shipper.

If the wisdom of the order in question, or its necessity, needed justification, it appears in the conclusive finding of the Commission that 91 per cent. of the refined oil of the country is shipped in tank cars at a great economic gain. I would therefore dismiss the petition of the complainant company.

WILLIAMS v. WILLIAM B. SCAIFE & SONS CO.

(District Court, D. New Jersey. November 3, 1915.)

1. PLEADING ⟹354—STRIKING OUT—FACTS OR CONCLUSIONS.

A defense which states a mere conclusion of law, without alleging any facts to support it, will be stricken.

[Ed. Note.—For other cases, see Pleading, Cent. Dig. §§ 1092–1095; Dec. Dig. ⟹354.]

2. PLEADING ⟹354—STRIKING OUT—DEFENSES AVAILABLE UNDER DENIAL OF ALLEGATIONS OF COMPLAINT.

In an action for wrongful death, alleged to have been due to the bursting of a gas tank which defendant had constructed and delivered pursuant to a contract between it and deceased, a defense alleging that defendant entered into no contract with deceased with respect to the tank,

and was not liable by reason of its bursting, would be stricken, as defendant could have the benefit of any want of contractual relations under its denial of the allegations of the complaint, which alleged the making of a contract, and the denial of the existence of the contract by a separate defense was unnecessary, and served no useful purpose.

[Ed. Note.—For other cases, see Pleading, Cent. Dig. §§ 1092-1095; Dec. Dig. ⟹354.]

3. LIMITATION OF ACTIONS ⟹127—AMENDMENT OF PLEADINGS.

If a new and different cause of action is stated in an amended complaint, the action is treated as commenced within the statute of limitations, when the amendment is incorporated into the pleadings, and the statute will bar the new cause of action to the same extent as if the amendment were a new and independent suit; but, if no new or different state of facts is set up, the amendment will relate back to the beginning of the suit.

[Ed. Note.—For other cases, see Limitation of Actions, Cent. Dig. §§ 543-547; Dec. Dig. ⟹127.]

4. LIMITATION OF ACTIONS ⟹127—AMENDMENT OF PLEADINGS.

Rev. St. § 954 (Comp. St. 1913, § 1591), provides that the court shall amend every defect and want of form in the summons, declaration, etc., and may at any time permit either of the parties to amend any defect in the process or pleadings upon such conditions as it shall prescribe. Practice Act N. J. (P. L. 1912, p. 377) § 24, provides that the court may permit, before or at the trial, the statement of a new or different cause of action in the complaint or counterclaim. *Held*, that while, in an action for death, in which the original complaint set forth that plaintiff was given a right of action under the laws of New Jersey, where the action was brought, an amendment to allege that the cause of action was given by the laws of Vermont, which were therein set forth, was permissible, it did not follow that, if the amendment set up a new cause of action, the action would not be treated, so far as the statute of limitations was concerned, as commenced when the amendment was made.

[Ed. Note.—For other cases, see Limitation of Actions, Cent. Dig. §§ 543-547; Dec. Dig. ⟹127.]

5. LIMITATION OF ACTIONS ⟹127—AMENDMENT OF PLEADINGS.

In an action for death, brought in New Jersey, where the original complaint alleged that plaintiff was given a right of action under the laws of New Jersey, an amended complaint, filed after limitations had run against a new action, proceeding on the theory that the cause of action was given by the laws of Vermont, and setting forth the statutes of that state, did not set up a new or different cause of action, and the amendment therefore related back to the beginning of the suit, since the reference to the laws of New Jersey in the first complaint was surplusage, and the amendment merely eliminated an allegation which was surplusage, and inserted an allegation of a fact, of which the court would take judicial notice.

[Ed. Note.—For other cases, see Limitation of Actions, Cent. Dig. §§ 543-547; Dec. Dig. ⟹127.]

6. DEATH ⟹48—PLEADING—LAWS OF OTHER STATE.

As the federal courts take judicial notice of the laws of the several states, it was not necessary, in an action for a death occurring in another state, to plead the laws of that state.

[Ed. Note.—For other cases, see Death, Cent. Dig. § 63; Dec. Dig. ⟹48.]

7. EVIDENCE ⟹29—JUDICIAL NOTICE—LAWS.

In an action in New Jersey for a death occurring in Vermont, the court would be charged with notice, without an allegation to that effect, that since the cause of action was unknown to the common law no redress

could be given by virtue of the laws of New Jersey, except by way of enforcing the laws of Vermont.

[Ed. Note.—For other cases, see Evidence, Cent. Dig. §§ 36, 37, 39, 43-46, 48; Dec. Dig. ⚷29.]

8. TORTS ⚷2—LIABILITY—LAW GOVERNING.

With very rare exceptions, the liability for torts depends upon the law of the place where the wrong was done or the act committed, and the law of the forum is material only as setting a limit of policy beyond which such obligations will not be enforced.

[Ed. Note.—For other cases, see Torts, Cent. Dig. § 2; Dec. Dig. ⚷2.]

9. EVIDENCE ⚷80—PRESUMPTIONS—LAWS OF OTHER STATES.

While actions for torts recognized by the common law may be maintained in a different state than that in which the tort was committed, without allegation or proof of lex loci upon the presumption that it is the same as the law of the forum, no such presumption obtains where the cause of action is conferred by statute; there being no presumption that the statutes of one state correspond with those of another.

[Ed. Note.—For other cases, see Evidence, Cent. Dig. § 101; Dec. Dig. ⚷80.]

10. DEATH ⚷46—ACTIONS FOR CAUSING—PLEADING—SURPLUSAGE.

In an action for death occurring in another state, an unnecessary allegation as to the law of the forum no more vitiated the pleading than any other matter which was surplusage would have done.

[Ed. Note.—For other cases, see Death, Cent. Dig. § 60; Dec. Dig. ⚷46.]

11. DEATH ⚷55—ACTIONS FOR CAUSING—AMENDMENT OF PLEADINGS.

Where the complaint in an action for death failed to allege where the cause of action arose, an amendment incorporating this allegation would have been permissible before or at the trial.

[Ed. Note.—For other cases, see Death, Cent. Dig. § 72; Dec. Dig. ⚷55.]

At Law. Action by N. B. Williams, administrator of George G. Chasse, deceased, against the William B. Scaife & Sons Company. On motion to strike out the second, fourth, and fifth defenses of defendant's answer. Motion granted.

Edgar H. Loveridge, of West Hoboken, N. J., and Malcolm G. Buchanan, of Trenton, N. J., for plaintiff.

Vroom, Dickinson & Bodine, of Trenton, N. J., for defendant.

HAIGHT, District Judge. The original complaint in this matter was stricken out, because it failed to sufficiently allege the diversity of citizenship of the parties; that being the only ground upon which the jurisdiction of this court could be rested. The plaintiff was permitted to file, and has filed, an amended complaint. The action is brought by an administrator to recover damages for the death of George G. Chasse, occasioned, as it is alleged, by the bursting of a gas tank which the defendant had constructed and delivered pursuant to a contract between it and the deceased and another. The original complaint set forth that the plaintiff was given a right of action under the laws of New Jersey. The amended complaint proceeds on the theory that the cause of action is given by the laws of the state of Vermont, and sets forth the statute of that state pertaining to actions

for death caused by wrongful act or neglect. In neither complaint, however, is it alleged where the cause of action arose.

[1] The defendant's answer sets forth (and this, I understand, is the fact) that the occurrence which caused Chasse's death took place in the state of Vermont. The answer sets up several distinct defenses. The plaintiff has moved to strike out the second, fourth, and fifth of these. I determined, at the time of the oral argument, that the second defense should be stricken out, because it states a mere conclusion of law, without alleging any facts to support it.

[2] The fourth defense alleges that the defendant entered into no contract with the deceased with respect to the tank, and is not liable by reason of the bursting of the same. The plaintiff contends that this constitutes no defense because the defendant's liability does not depend upon any contractual relation, but that the duty which the defendant owed to the deceased was one imposed by law, and not by contract, although the condition out of which the duty arose was created by the contract, such a duty as is recognized in Penn. R. R. Co. v. Hummel, 167 Fed. 89, 92 C. C. A. 541 (C. C. A. 3d Cir.). See, also, Styles v. Long Co., 70 N. J. Law, 301, 57 Atl. 448.

I have found it unnecessary to determine whether the plaintiff's complaint is so framed as to permit a recovery on that theory, or whether, under the complaint, a recovery must be based upon the violation of a duty imposed by contract. Nor do I think that I should do so at this time, because this question has not been argued. The defendant can have the benefit of any want of contractual relations between the deceased and itself through the denial which it has made in its answer of the allegations of the complaint which allege the making of a contract between the deceased and the defendant. The denial of the existence of the contract by a separate defense is therefore unnecessary to preserve the defendant's rights, and serves no useful purpose. It will therefore be stricken out.

The important question centers on the fifth defense. It alleges that the amended complaint sets up a different cause of action than that of the original complaint, and, as the amended complaint was not filed within 24 calendar months of the death of Chasse, the cause of action is barred. The deceased died on May 20, 1913. The statute of Vermont, which creates a cause of action for death, provides that a suit must be commenced within 2 years from the date of the death. Section 2840, Pub. Laws of Vt. The statute of New Jersey limits the time for commencing such action to 24 calendar months after the death. Comp. Stat. N. J. vol. 2, p. 1908.

[3-5] It is the defendant's contention that the cause of action set forth in the original complaint is a different one than that set forth in the amended complaint, and that the statute of limitations as applied to such new or different cause of action treats the action as commenced when the amendment was incorporated into the pleadings, and not as begun when the action itself was commenced. Undoubtedly, if a new and different cause of action is stated in the amended complaint, the rule which the defendant invokes would apply, and, so far as the statute of limitations is concerned, it will be a bar to the

new cause of action to the same extent as if the amendment were a new and independent suit. Union Pacific Ry. Co. v. Wyler, 158 U. S. 285, 15 Sup. Ct. 877, 39 L. Ed. 983. On the other hand, if no new or different cause of action is introduced, and if the amended complaint does not set up any different set of facts as the ground for the action, the amendment will relate back to the beginning of the suit. Texas & Pacific Ry. Co. v. Cox, 145 U. S. 593, 603, 12 Sup. Ct. 905, 36 L. Ed. 829; Atlantic & Pacific Ry. Co. v. Laird, 164 U. S. 393, 395, 17 Sup. Ct. 120, 41 L. Ed. 485; Missouri, Kansas & Texas Ry. Co. v. Wulf, 226 U. S. 571, 576, 33 Sup. Ct. 135, 57 L. Ed. 355, Ann. Cas. 1914B, 134.

I entertain no doubt that an amendment such as was made was permissible under section 954 of the Revised Statutes (Comp. St. 1913, § 1591). Missouri, Kansas & Texas Ry. Co. v. Wulf, supra. Nor can there be any question that such an amendment would be permissible under section 24 of the New Jersey Practice Act of 1912, which permits, by way of amendment, "before or at the trial the statement of a new or different cause of action in the complaint." Although such an amendment would be permissible, it does not follow, when the amendment sets up a new and different cause of action, that the action shall not be treated, so far as the statute of limitations is concerned, as having been commenced when the new amendment was incorporated in the pleadings. This I think is the clear effect of Union Pacific Ry. Co. v. Wyler. The New Jersey act respecting amendments does not, I think, create a different situation. It was evidently passed for the purpose of overcoming the rule, theretofore existing in the state of New Jersey, that an amendment would not be allowed which would operate to institute an entirely new and different cause of action. Doran v. Thomsen, 79 N. J. Law, 99, 74 Atl. 267. That rule is quite distinct from that respecting the statute of limitations, before referred to.

I do not decide whether, in view of section 954 of the Revised Statutes, the New Jersey statute is applicable or not. It would seem that it is not. Erie R. Co. v. Schmidt, 225 Fed. 513, — C. C. A. — (C. C. A. 3d Cir.). It is very probable that the court should not, in exercising its discretion regarding amendments, permit an amendment which, because of the rule regarding limitations, would be quite nugatory when made, unless it be necessary (as I think it was in this case), in order to permit the question as to whether or not a new cause of action was stated to be placed in proper shape for a review by an appellate court. It is necessary to consider, therefore, whether the amended complaint did institute a new cause of action. If it did, the defense in question is undoubtedly valid, because the amendment was not made until the time limited by the statutes of both the lex loci and the lex fori had expired.

As respects this point, I cannot see that this case can be distinguished from Missouri, Kansas & Texas Ry. Co. v. Wulf, 226 U. S. 571, 33 Sup. Ct. 135, 57 L. Ed. 355, Ann. Cas. 1914B, 134. In that case the action was commenced in the United States Circuit Court for the Eastern District of Texas, and was brought by the plaintiff

in an individual capacity, as a beneficiary of deceased's estate. The cause of action was rested on the laws of the state of Kansas, where the deceased was killed. Thereafter an amended petition was filed, averring that there was a cause of action both by the laws of Kansas and by the federal Employers' Liability Act (Act April 22, 1908, c. 149, 35 Stat. 65 [Comp. St. 1913, §§ 8657–8665]), and the plaintiff also stated that she sued both in her individual capacity and as administratrix; it being necessary, under the federal Employers' Liability Act, that the action be brought in the name of the personal representative of the deceased. It was contended that the amended petition set up an entirely new and distinct cause of action, and that it could not be allowed to relate back to the commencement of the action, inasmuch as the action was barred by the limitation of 2 years before it was filed. Mr. Justice Pitney, who wrote the opinion of the court, after stating that, aside from the capacity in which the plaintiff assumed to bring her action, there was no substantial difference between the original and amended petition, said (226 U. S., at page 575, 33 Sup. Ct., at page 137, 57 L. Ed. 355, Ann. Cas. 1914B, 134):

"It is true the original petition asserted a right of action under the laws of Kansas, without making reference to the act of Congress. But the court was presumed to be cognizant of the enactment of the Employers' Liability Act, and to know that with respect to the responsibility of interstate carriers by railroad to their employés injured in such commerce after its enactment it had the effect of superseding state laws upon the subject. Second Employers' Liability Cases, 223 U. S. 1, 53 [32 Sup. Ct. 169, 56 L. Ed. 327, 38 L. R. A. (N. S.) 447]. Therefore the pleader was not required to refer to the federal act, and the reference actually made to the Kansas statute no more vitiated the pleading than a reference to any other repealed statute would have done."

It was held that the amendment was not equivalent to the statement of a new cause of action, and that therefore it related back to the beginning of the suit and was not barred by the statute of limitations.

[6-11] In the case sub judice the facts in both the original and amended complaints, except as to the averment of the Vermont statute, are the same. The only difference between the two complaints is that the first proceeded on the assumption that the cause of action was given by the laws of New Jersey, and the latter that the cause of action is given by the laws of Vermont. As the federal courts take judicial notice of the laws of the several states (Union Pacific Ry. Co. v. Wyler, supra, 158 U. S. 296, 15 Sup. Ct. 877, 39 L. Ed. 983), it was not necessary, if the original complaint had stated that the cause of action arose in the state of Vermont, that the laws of that state should have been pleaded (Missouri, Kansas & Texas Ry. Co. v. Wulf, supra, 226 U. S. 576, 578, 33 Sup. Ct. 135, 57 L. Ed. 355, Ann. Cas. 1914B, 134; Cuba R. Co. v. Crosby, 170 Fed. 369, 384, 95 C. C. A. 539 [C. C. A. 3d Cir.]). This court would likewise be charged with knowledge that, as the cause of action alleged, being one to recover damages for the death of an individual, is given only by statute and was unknown to the common law, if the wrongful act occurred in Vermont, no redress could be given by virtue of the laws of New Jersey, except by way of enforcing the laws of Vermont. The liability, "with very rare exceptions," for torts depends upon the law of the place

where the wrong was done or act committed, and the law of the forum is material only as setting a limit of policy beyond which such obligations will not be enforced there; and while actions for torts recognized by the common law may be maintained in a different state than that in which the tort was committed, without allegation or proof of the lex loci, upon the presumption that the lex loci is the same as the lex fori, yet this presumption does not obtain where the cause of action is conferred by statute, because it cannot be presumed that the statutes of one state correspond with those of another. Cuba Ry. Co. v. Crosby, 222 U. S. 473, 32 Sup. Ct. 132, 56 L. Ed. 274, 38 L. R. A. (N. S.) 40. See, also, McDonald v. Mallory, 77 N. Y. 547, 33 Am. Rep. 664, where the general rule is clearly stated.

Hence the reference in the first complaint to the New Jersey statute was mere surplusage, and no more vitiated that pleading than a reference to any other matter which was surplusage would have done. What has been done in the amended complaint, therefore, is to eliminate an allegation which was mere surplusage, and to insert an allegation of which this court would take judicial notice at any rate. While the original complaint did not allege where the cause of action arose, the fact is that it did arise in Vermont, and it was urged by defendant's counsel, when the motion was made to strike out the first complaint, that it was defective because it did not set up the laws of Vermont. This fact would have developed at the trial; and an amendment, incorporating such an allegation, would have surely been permissible either before or at the trial. Therefore, for the purposes of determining the present question, it must be considered as having been incorporated in the original complaint.

Defendant refers to and relies upon the decision of the Supreme Court in Union Pacific v. Wyler, supra. The applicability is, I think, disposed of by the concluding remarks of Mr. Justice Pitney in Missouri, Kansas & Texas Ry. Co. v. Wulf, 226 U. S. 578, 33 Sup. Ct. 138, 57 L. Ed. 355, Ann. Cas. 1914B, 134:

> "Since in the present case the federal statute [the Vermont statute] did not need to be pleaded, and the amended petition [complaint] set up no new facts as the ground of action, the decision in the Wyler Case is not controlling."

It therefore follows that the fifth defense must also be stricken out. The plaintiff is entitled to costs on the motion.

SOUTHERN PAC. CO. v. ESHELMAN et al.

(District Court, N. D. California, Second Division. May 26, 1914.)

No. 29.

1. DISMISSAL AND NONSUIT ⟹65—ELIMINATION OF ACTUAL CONTROVERSY.

Where, pending a suit by a railroad company to restrain threatened action by a state Railroad Commission which would prevent complainant from creating an indebtedness for new equipment, complainant applied for and obtained from the Commission an order authorizing such indebtedness, thus eliminating any real or substantial controversy in respect to

the subject-matter of the suit, the court will not retain the case for the purpose of determining questions of law which the parties unite in desiring to have decided.

[Ed. Note.—For other cases, see Dismissal and Nonsuit, Cent. Dig. § 160; Dec. Dig. ⚷65.]

2. ACTION ⚷6—ESSENTIALS OF JURISDICTION—ACTUAL CONTROVERSY.

To invoke the jurisdiction of a court, it is primarily essential that there be involved a genuine and existing controversy, calling for present adjudication as involving present rights, and although a case may have originally presented such a controversy, if before decision it has, through the act of the parties or other cause, lost that essential character, it is the duty of the court, on the fact appearing, to dismiss it.

[Ed. Note.—For other cases, see Action, Cent. Dig. § 40; Dec. Dig. ⚷6.]

In Equity. Suit by the Southern Pacific Company against John M. Eshelman and others, constituting the Railroad Commission of California, and others. Bill dismissed.

Wm. F. Herrin, Guy V. Shoup, C. W. Durbrow, Henley C. Booth, and Jared How, all of San Francisco, Cal., for plaintiff.

Max Thelen and Douglas Brookman, both of San Francisco, Cal., for defendants.

VAN FLEET, District Judge. This is a bill seeking to restrain the Railroad Commission of the state, its attorney, and certain other officers charged with the enforcement of the Public Utilities Act of the state (St. Cal. 1911 [Ex. Sess.] p. 18), approved December 23, 1911, from asserting the right to enforce, as against plaintiff, a nonresident corporation engaged as a common carrier by railroad in local and interstate commerce in this and various other states, the provisions of that act in certain respects. Stated in a brief and very general way, the particular transaction counted upon as giving rise to the controversy relates to a proposed contract of guaranty by plaintiff of an issue of equipment trust certificates under a trust agreement, which it is alleged plaintiff finds it necessary, for want of ready funds, to make to enable it to secure equipment in the way of locomotives, cars, etc., essential for the efficient carrying on of its business as such common carrier—it being alleged that notwithstanding all proceedings for such proposed issue and all contracts relating thereto will be had and executed in New York, where the certificates will be issued and the interest made payable, that none of the parties to the contemplated agreement are residents of California, and that the equipment to be secured thereby will be delivered to plaintiff outside this state and largely used in interstate commerce, the said Railroad Commission claims that the provisions of the said Public Utilities Act apply thereto, and that unless such issue of certificates is had in accordance with its provisions and with the sanction of said Commission such certificates will be wholly void, and the plaintiff and its officers liable to certain severe penalties and criminal prosecutions provided in the act for its violation, and which it is alleged defendants will seek to visit upon plaintiff, its officers, and agents; that this attitude on the part of the

Railroad Commission and its members has caused the refusal of the parties with whom plaintiff was negotiating to enter into the proposed trust agreement, and has made it impossible for plaintiff to secure such necessary equipment, except by complying with the demands of such Commission; that this assertion of authority by the defendants thereby affects, not only the business of plaintiff in this state, but the business of its entire system in and through the other states traversed thereby; and finally it is alleged that the attitude of defendants in the premises is wholly unsanctioned by law and operates as a direct interference with and burden upon interstate commerce, and impedes and impairs plaintiff's ability to conduct its business as such common carrier, to its great loss and that of the public, and to its irreparable damage, in a manner in contravention of the Constitution and laws of the United States, wherefore it seeks the relief prayed.

[1] The defendants have submitted a motion to dismiss the bill upon several grounds, but in view of the effect ascribed to the facts about to be noticed the court deems itself precluded from looking into the merits of the motion, and as called upon to dismiss the bill from other considerations. It appears that since the bill was filed here the plaintiff voluntarily filed with the defendant Railroad Commission its petition, asking an order authorizing it to guarantee $2,010,000 car equipment trust certificates, which it is not questioned are the identical trust certificates which constitute the subject-matter of the bill; that a hearing was had on this petition, and that the Commission subsequently made its order granting the application in full as asked, thereby enabling the plaintiff to negotiate and guarantee the issue of certificates for equipment required for the use set forth in its bill. I am of opinion that the proceedings thus had before the Commission have resulted in eliminating any real or substantial controversy that may have theretofore existed between the parties growing out of the facts stated in the bill; that the action has thereby become moot, and the questions sought to be litigated, so far as any present rights of the parties are concerned, are rendered purely abstract and academic.

It is suggested that these proceedings before the Railroad Commission did not wholly dispose of the matter in controversy, the intimation being that their order did not in terms cover the entire equipment referred to in the bill; and both parties request the court, notwithstanding those proceedings, to render a decision on the merits of the question raised by the motion to dismiss, although disagreeing radically as to what that question is. On the part of the railroad company the request is for a decision on the question whether the Railroad Commission has jurisdiction over the car equipment trust certificates referred to in the bill, and they say:

"We join in the request of the Commission that a decision be rendered upon the motion to dismiss the bill, regardless of the order entered by the Railroad Commission, for the reason that, while the Commission has, in its order, expressed the opinion that it has not jurisdiction over the acquisition of interstate equipment, such opinion is not necessarily controlling upon the federal courts, and might not be accepted by bankers' counsel as authoritative or final. Moreover, the Arizona Corporation Commission, which has powers

similar to those vested in the California Railroad Commission, has not disclaimed jurisdiction as to such equipment, and its approval is as essential to the validity of the trust certificates, if such approval is necessary, as that of the California Commission. Moreover, it will be necessary for the Southern Pacific Company to acquire a great deal of additional equipment from time to time, both for interstate and intrastate purposes, and it is to the interest of the public, as well as important to the Southern Pacific Company, that the question as to the jurisdiction of state railroad commissions in matters of this kind should be judicially settled."

On the other hand, it is stated by the defendant Commission:

"We have asked that the court write a decision on the motion, 'so that it may be definitely determined in the federal courts in this district that injunctions will not issue in cases such as this one.' This request did not mean that we asked for a decision on the question whether the California Commission has jurisdiction over the car equipment trust certificates referred to in the bill. We have consistently taken the position that this question is not before this court in this proceeding. What we did have reference to in inserting the above quotation in our brief was that we were anxious that this court should definitely decide the question whether or not a public utility can go before a federal court and secure an injunction against the enforcement by the state of California of the criminal provisions of a valid state statute. The question is of great importance to us, for the reason that we are naturally desirous that, if our position is correct, the time of the Commission be not further taken up by similar actions to block our enforcement of penal provisions of the Public Utilities Act."

It will thus be seen that the parties are not in harmony as to the question which they regard respectively as still remaining for decision. But this divergence of view is not material, since the claim that any material feature of the controversy between the parties remains is not well founded. It is obvious that the suggestion that the order of the Commission did not authorize an issue of trust certificates covering the equipment sought by plaintiff is based upon a misconception of the averments of the bill. The only statement in the bill as to the amount involved in the proposed expenditure by plaintiff is that:

"It will be necessary for plaintiff to acquire additional rolling stock and equipment costing more than a million dollars."

As the order of the Commission authorized an issue of more than twice the amount thus stated, and included equipment for use on both interstate and intrastate roads, the court, being concluded by the case made by the bill, must assume that the order covered all that was contemplated by the averments there made. This being so, neither the desire of the parties, however insistent, nor their express consent, can operate to retain life in a controversy which through their own action has become moribund, nor confer upon the court jurisdiction to render a decision "upon the merits" in such a case. As said by the court in Little v. Bowers, 134 U. S. 547, 10 Sup. Ct. 620, 33 L. Ed. 1016:

"If, as is contended on behalf of the plaintiff in error, the question involved in this case is one of great importance to the railroad company and to the state, and is identical with that in a number of other cases pending in the court below, so much the more important is it that it should not be decided in a case where there is nothing in dispute. Nor is it material that the case was selected by the plaintiff in error and agreed to by the defendant in error, before the writ of error was prosecuted, as one in which the question of taxa-

tion under the New Jersey statutes could be fully considered and finally decided by this court; for it is well understood that consent does not confer jurisdiction."

And again in California v. San Pablo, etc., R. R. Co., 149 U. S. 308, 13 Sup. Ct. 876, 37 L. Ed. 747, in discussing the power of the court in such cases, it is said:

"No stipulation of parties or counsel, whether in the case before the court or in any other case, can enlarge the power, or affect the duty, of the court in this regard."

[2] However convenient or desirable for either party that the questions mooted in the case be authoritatively settled for future guidance, the court is not justified in violating fundamental principles of judicial procedure to gratify that desire. To invoke the jurisdiction of a court of justice, it is primarily essential that there be involved a genuine and existing controversy, calling for present adjudication as involving present rights, and although a case may have originally presented such a controversy, if before decision it has, through act of the parties or other cause, lost that essential character, it is the duty of the court, upon the fact appearing, to dismiss it. Mills v. Green, 159 U. S. 651, 653, 16 Sup. Ct. 132, 40 L. Ed. 293; Kimball v. Kimball, 174 U. S. 158, 163, 19 Sup. Ct. 639, 43 L. Ed. 932; Jones v. Montague, 194 U. S. 147, 24 Sup. Ct. 611, 48 L. Ed. 913; Lloyd v. Dollison, 194 U. S. 445, 450, 24 Sup. Ct. 703, 48 L. Ed. 1062; Florida v. Georgia, 17 How. 478, 497, 15 L. Ed. 181; Security Life Ins. Co. v. Prewitt, 200 U. S. 446, 26 Sup. Ct. 314, 50 L. Ed. 545; California v. San Pablo, etc., R. R. Co., supra; Tennessee v. Condon, 189 U. S. 64, 23 Sup. Ct. 579, 47 L. Ed. 709; Little v. Bowers, supra.

The principles finding expression in these cases have been thus aptly epitomized and stated in 2 Encyc. Sup. Ct. Rep. 289, where, referring to the rule uniformly followed by the Supreme Court, it is said:

"It has been the universal practice of this court to dismiss the case whenever it becomes apparent that there is no real dispute remaining between the plaintiff and the defendant, or that the case has been settled or otherwise disposed of by agreement of the parties, and there is no actual controversy pending. In other words, whenever it appears, or is made to appear, that there is no actual controversy between the litigants, or that, if it once existed, it has ceased, it is the duty of every judicial tribunal not to proceed to the formal determination of the apparent controversy, but to dismiss the case. It is not the office of courts to give opinions on abstract propositions of law, or to decide questions upon which no rights depend, and when no relief can be afforded. Only real controversies and existing rights are entitled to invoke the exercise of their powers."

The case of S. P. Terminal Co. v. Interstate Commerce Commission, 219 U. S. 498, 31 Sup. Ct. 279, 55 L. Ed. 310, referred to by plaintiff, is not apposite, as tending to show the inapplicability of the principles above stated to the present case. There the Interstate Commerce Commission had made an order, limited as to time, requiring the Terminal Company to desist from giving the preference complained of. The time limit of the order expired pending the appeal, and a motion to dismiss was made upon the ground that the case had

thereby become moot; but it was held that, as the Commission had power to immediately renew its order, the mere expiration of the particular order involved did not have the effect of settling the controversy, and the cause could not, therefore, be justly said to have lost its vitality as presenting no living issue. The court, after referring to certain of the cases above cited, say:

"But in those cases the acts sought to be enjoined had been completely executed, and there was nothing that the judgment of the court, if the suits had been entertained, could have affected. The case at bar comes within the rule announced in United States v. Trans-Missouri Freight Ass'n, 166 U. S. 290, 308 [17 Sup. Ct. 540, 41 L. Ed. 1007], and Boise City Irr. & Land Co. v. Clark (C. C. A. 9th Cir.) 131 Fed. 415 [65 C. C. A. 399]. In the case at bar the order of the Commission may to some extent (the exact extent it is unnecessary to define) be the basis of further proceedings. But there is a broader consideration. The questions involved in the orders of the Interstate Commerce Commission are usually continuing (as are manifestly those in the case at bar), and their consideration ought not to be, as they might be, defeated by short term orders, capable of repetition, yet evading review, and at one time the government and at another time the carriers have their rights determined by the Commission without a chance of redress."

In this case, as we have seen, the order of the Railroad Commission has disposed completely of the subject-matter involved in the immediate controversy, and the case therefore falls clearly within the category of those which have heretofore uniformly been held to have become moot.

These considerations require a dismissal of the bill, and an order may be entered to that effect.

GRUPPE v. KINGSLEY.

(District Court, E. D. Pennsylvania. November 22, 1915.)

No. 3448.

1. SALES ⚷359—ACTION FOR PRICE—TITLE OF SELLER—EVIDENCE.

That plaintiff had possession of the picture, which he sold to defendant, and testified that he owned it, having bought it abroad, is sufficient to go to the jury, in an action for its price, on the issue of his title, though being requested, on cross-examination, to spell the name of the owner, he gave that of F.; the jury being directed to determine what he meant thereby, whether that F. was then the owner, or merely that he was the man from whom plaintiff had obtained it.

[Ed. Note.—For other cases, see Sales, Cent. Dig. §§ 511, 1056–1059; Dec. Dig. ⚷359.]

2. TRIAL ⚷251—ACTION FOR PRICE—ISSUES—INSTRUCTIONS.

The jury are properly instructed, in an action for the price of a picture as sold and delivered, not to consider the questions of its genuineness or commercial value; both parties denying a warranty, and defendant admitting the price, but asserting that he was given the right of inspection before purchase, and that after inspection he refused to purchase.

[Ed. Note.—For other cases, see Trial, Cent. Dig. §§ 587–595; Dec. Dig. ⚷251.]

3. SALES ⚷360—EXECUTED CONTRACT—MEASURE OF RECOVERY.

The measure of recovery in case of sale and delivery is the price notwithstanding an attempted return of the article by the buyer, refused by

the seller; the difference between the price and the value being the measure only in case of breach of an executory contract.

[Ed. Note.—For other cases, see Sales, Cent. Dig. §§ 1060–1062; Dec. Dig. ⟹360.]

At Law. Action by Charles P. Gruppe against Joseph T. Kingsley. Sur motion of defendant for new trial. Rule discharged.

Ralph N. Kellam, of Philadelphia, Pa., for plaintiff.
Wescott, Wescott & McManus, of Philadelphia, Pa., for defendant.

DICKINSON, District Judge. This motion of defendant is based upon three grounds. The very earnest argument of counsel merits a full discussion of the questions now raised even at the cost of an overlengthy opinion. We will follow the order of discussion adopted by counsel, first, however, preliminating the facts out of which the questions discussed arise.

The plaintiff is an artist and art dealer. The defendant is a collector of paintings, who wished to add to his collection a work of the artist Anton Mauve. The plaintiff was going to Holland. An understanding was reached that, if he should find a painting by Mauve, he should submit his find to the defendant. He found the painting, which is the subject of the present dispute, and brought it to this country. Out of what took place between the parties has sprung this controversy.

The only issues raised by the evidence were three, and in practical effect one. The plaintiff based his claim upon the simple fact of a sale and delivery of the painting for the agreed price of $5,000. The defendant denied the sale, and averred the painting to have been turned over to him for inspection and examination, to be purchased or returned as he might, after such examination, decide. He further avers his final refusal to purchase. The replication denies the refusal and asserts acceptance, a completed purchase, and a positive promise to pay the $5,000.

The trial issues and evidence were such that at this stage of the case we are bound to assume the findings of the jury to have been against defendant on the first issue, with him on the second, and against him on the third. The latter is the one real issue to which we referred.

[1] The first issue raised the question of the title of plaintiff to the picture, and the first complaint is of the manner of the submission of this question to the jury. The principles of law applicable to this phase of the case are these: Where an action is for a thing sold and delivered, the question of title necessarily enters into it. One reason is the manifest injustice of compelling the defendant to pay the price and then to lose the thing bought on claim of the real owner. Another reason is the more technical one (arising out of the possible facts of this case) that if the plaintiff is not the owner of the thing sold, but is merely the agent of the owner, and has made the sale for his principal, the right of action is in the principal, and not in the agent. This latter principle has its exceptions, of which, for illustration, the case of an agent acting under a del credere commission is one.

The grounds upon which the exceptions are based are obvious. We feel justified in premising that the objection now made is more formal than real. No suggestion is made that there is any danger of dispute over the title to the picture. Defendant is none the less to be accorded all his rights. The possible facts lie within the limits of the plaintiff having secured possession of the painting without having any title whatever and having bought it from the owner. Intermediately is the possibility that he may be acting merely as the agent of the true owner. No emphasis was given to this phase of the case, and in consequence the evidence upon the question of ownership was not as full as it might have been. This was doubtless because counsel for plaintiff did not anticipate the question being raised. The jury has found the fact in favor of the plaintiff. The evidence in support of this finding is that plaintiff had possession of the painting and his own testimony that he owned it, having purchased it in Holland. The only thing approaching evidence contra was plaintiff's answer to this question on cross-examination, "Will you spell for me the name of the owner of the picture?" The answer gave the spelling. There was no disclosure of the purpose of the question, or the use to be made of the answer. On the contrary, both were carefully concealed until the plaintiff had closed his case.

The trial judge instructed the jury that in every case of a bargain and sale of chattels a warranty of title by the vendor was implied, and the burden of making good such implied warranty by the proofs was upon the plaintiff. The instruction further was that, if the defendant did not get a good title to the picture through this sale, the plaintiff could not recover. The jury was further told, however, that possession of personal property is evidence of title, and the evidence was marshaled on the side of the plaintiff in support of title, the fact of possession, and opposed to it all the other evidence in the case, including the acknowledgment by the plaintiff of title in another. The jury were invited to determine what the plaintiff meant by his testimony—whether he meant Fliermans was then the owner of the painting, or merely that he was the man from whom the plaintiff had obtained it. The jury found the fact against the defendant.

The acoustics of the room in which trials are held is so vile that the trial judge can never be sure he has heard all the testimony of a witness. In consequence, he ignored the positive testimony of plaintiff (which it was admitted at the argument he had given) of the purchase of the picture by him. Plaintiff might complain of this omission, but surely the defendant cannot. The whole charge upon this point was in accord with defendant's theory of the case, except the instruction that possession is evidence of title. We understand defendant's counsel to concede the correctness of this statement of the law. The complaint, therefore, is reduced to one of complaint against the finding of fact. This we would not feel justified in disturbing.

The cases to which we have been referred by counsel for defendant must be accepted as authoritative statements of the propositions of law which they present. These are in effect that the doctrine of market overt does not obtain in Pennsylvania, and that no one (with certain recognized exceptions) can transfer to another a title which he does

not himself have. The doctrine of these cases, however, has no appellate application to the present case, because the law as thus laid down was applied and followed. The case in this feature turns, not upon the law, but, as already stated, upon a finding of fact.

[2] The second complaint is of the exclusion from the consideration of the jury of the questions of the artistic merits of the painting and of its commercial value. The jury was directed not to constitute themselves a jury of artists to determine the first question, nor were they to find whether the price agreed upon was a high price or a low price. The instruction was that (in this aspect of the case) the whole question was one of contract and its breach. The justification for this instruction was in this: There is no room for doubt that defendant wanted a Mauve, and wanted to be sure that whatever was submitted to him as a Mauve was genuine. It is too clear for dispute that he was bargaining upon this basis, and upon none other. The plaintiff wanted to close the bargain. We may therefore assume that he accepted as a condition of any possible bargain he might make that he must find a genuine Mauve, and be able to convince the defendant of its genuineness. He found this picture, which as he thought, met all the bargain conditions, and he offered it to defendant. The right of defendant to prescribe the conditions of the bargain he would make must be admitted. He might have bargained for this picture upon condition that it was a genuine Mauve. As a sure method of engrafting this condition upon his bargain, he might have required of plaintiff a formal warranty of genuineness. On the other hand, it is just as clear that he might have waived the warranty and relied upon making it a condition that he should have the right of inspection and examination before purchase, and base his acceptance or rejection upon his own judgment, aided, if he chose, by the judgment of friends or experts to whom he might submit it. The facts of the case are such as to leave no room for doubt that he chose the latter course. The defendant himself makes this clear and emphatic. He says he did in this case what he always did. He wanted to feel sure the picture was genuine—wanted all the evidence he could get; but he refused to accept and rely upon what he called the guaranty (warranty) of any one. What he demanded and was given was the right of inspection before purchase. If he decided after examination to take the picture, he took it on his own judgment, regardless of any representations made, or what any one else thought about it, except, of course, so far as the representations or opinions of others might be persuasive and affect his own judgment. We subscribe to the proposition advanced by counsel that warranty is not a matter of form, or of words, but is a substantive fact.

The doctrine of the case of McFarland v. Newman, 9 Watts (Pa.) 55, 34 Am. Dec. 497, is applicable here. It is that, to constitute a warranty, "the vendor must have actually consented to be bound by the truth of his representations." There is in this case no complaint or suggestion even of fraud or overreaching. The defendant does not charge that he was fooled into making a purchase, but denies that he made one. If the plaintiff had averred a warranty bargain, he must, of course, have proved compliance. If defendant had introduced evi-

dence of such a bargain, genuineness would have been in issue. As both parties denied there was any warranty, it is difficult to understand how it can get into the case. As it is with the warranty, so it is with the value of the painting. The plaintiff set up a purchase at the agreed price of $5,000. The defendant denied the purchase, but admitted the agreed price was $5,000. How could the jury find that the warranty had or had not been lived up to, if there was no warranty; and what use could they have made of their finding that the picture was worth more or less than $5,000, if that was the price agreed upon?

There was quite a little testimony and evidence introduced by both plaintiff and defendant on the subject of this painting being a genuine Mauve, and some upon the question of its value. It was not objected to, and was in consequence admitted. Had there been a charge of fraud, it would have had a bearing upon that question. As the evidence was in, it could be considered as having whatever bearing it had on the question of purchase or no purchase. It seems clear, however, that it was not worth the jury's while to take the time to make a specific finding of either the genuineness or commercial value of the painting, and they were so instructed.

[3] The third complaint is of what counsel have termed "the measure of damages." The argument seems to go to the extent of asking us to hold that if defendant bought this picture for $5,000, and tendered it back, then the plaintiff's loss would be the difference between the price and the value as found. If this be the law, then, as plaintiff admitted the painting to be worth at least $5,000, he had sustained no loss, except to the amount of the expenses to which he had been put. In this view, the verdict is undoubtedly too high. Is this the correct view? We hesitate to put or answer this question, because we cannot think the view stated is that intended, although such seems to be the case.

Counsel has referred us to a number of rulings on the subject of damages. All cases in which such a measure of damages has been applied were (must have been) cases of breaches of executory contracts. There the measure, of course, is the difference between the agreed and the market price. The doctrine of such cases could not be applied to an action, as this is, for goods sold and delivered. It would be again true, of course, that if the vendee had returned the goods so sold and delivered, and the return had been accepted by the vendor under circumstances which were the equivalent of a rescission of the delivery, the case might get back to the equivalent of the breach of an executory contract to purchase. Such was not set up at the trial to have been the case here. The defendant, it is true, attempted to return the painting; but the plaintiff, far from accepting its return, refused to accept it, and held the defendant to his bargain, and the picture remained subject to defendant's disposition.

It was made clear at the argument that, had such a position as that indicated in the supposititious case been taken by the defendant here, it could have been overwhelmed by the proofs. No such position was taken at the trial, and it cannot be made the basis of an application for a new trial. We are persuaded, and have no doubt the jury were, that the bargain was just what the defendant says it was. Had there

been nothing else in the case, the verdict called for would have been one for the defendant. There was, however, much more in the case. After examining the painting in New York, the defendant expressed himself as satisfied with it. Following this, the painting was sent to Philadelphia and was in defendant's possession. He wrote the defendant of its arrival, and was apparently more than pleased, somewhat elated, indeed, over his purchase, and promised his check in payment. Then came the financial stringency due to the conditions brought about by the war. The defendant then wrote the plaintiff, asking to be relieved of the purchase. This was put upon the ground of the financial strain, and the expectation that plaintiff could sell the painting for as high or a higher price. We are not unmindful of the explanation which defendant gives, and which his counsel ably elaborates, of these letters. None the less it was the plain duty of the trial judge to submit them, along with the explanation and the other evidence, to the jury. The effort was to do this as fairly as could be for the defendant. This a re-reading of the charge convinces us was done. The question became a jury question, and has been disposed of as such. It must be conceded there is no just ground of interference by the court.

The rule for a new trial is discharged, and plaintiff has leave to enter judgment on the verdict. No execution is, however, to issue without leave of court, so that defendant may have an opportunity to present evidence of the fact, if it develops to be the fact, that no title to the painting passed by the sale.

UNITED STATES v. RUBIN et al.

(District Court, E. D. Pennsylvania. December 1, 1915.)

No. 3794

1. COURTS ⚷334—FEDERAL COURTS—FOLLOWING STATE PRACTICE.

Though under the Pennsylvania practice equitable defenses are admissible in assumpsit on a bond, where the United States is party to a suit in the state in an effort to enforce one of its laws, the laws and established practice in the state are considered as those of a foreign jurisdiction.

[Ed. Note.—For other cases, see Courts, Cent. Dig. §§ 899, 909, 910; Dec. Dig. ⚷334.]

2. ACTION ⚷24—EQUITABLE DEFENSES IN LEGAL ACTIONS.

Under Rev. St. § 961 (Comp. St. 1913, § 1599), declaring that in an action to recover the forfeiture provided in a bond, where forfeiture appears, judgment shall not be for the penal sum, but for such sum as is due according to equity, an equitable defense may be set up in an action on an indemnity bond given under the Immigration Acts.

[Ed. Note.—For other cases, see Action, Cent. Dig. §§ 153-155; Dec. Dig. ⚷24.]

3. ALIENS ⚷53—BONDS—INDEMNITY BONDS.

As no executive officer may admit an alien against the declared will of Congress, a feeble-minded immigrant cannot be admitted upon the giving of an indemnity bond; hence a bond given to enable friends of a feeble-

minded person to care for him during the period when it was impossible to deport him, because his native country was in a state of war, which was conditioned on keeping the incompetent in an asylum, etc., is not an indemnity bond, and the provision for damages contained therein must be considered, not as a penalty, but as a provision for liquidated damages, which, owing to the circumstances of the case, could not be readily ascertained.

[Ed. Note.—For other cases, see Aliens, Cent. Dig. § 112; Dec. Dig. ⚷53.]

4. UNITED STATES ⚷59—POWERS OF—GENERAL GOVERNMENTAL POWERS.

The government has a corporate existence for the necessary purpose of holding property and entering into contracts. Consequently the government has the common-law power to receive a voluntary bond given by persons desiring to care for a feeble-minded immigrant while awaiting deportation, which could not be immediately had because his native land was at war.

[Ed. Note.—For other cases, see United States, Cent. Dig. § 42; Dec. Dig. ⚷59.]

5. DAMAGES ⚷79—LIQUIDATED DAMAGES.

A provision in a bond fixing the amount of forfeiture will be considered as liquidated damages, against which equity will not relieve on breach, where the damages are real, but are incapable or difficult of actual measurement; but, in case the amount fixed is unconscionable, equity will grant relief.

[Ed. Note.—For other cases, see Damages, Cent. Dig. §§ 164–169; Dec. Dig. ⚷79.]

6. ALIENS ⚷53—INDEMNITY BONDS—ACTIONS—DEFENSES.

Where friends of a feeble-minded immigrant, who could not for that reason be received in the country, gave a bond so that they could care for him during the time he was awaiting deportation, and the bond contained several conditions, the single forfeiture prescribed will, in a suit for breach of only one of the conditions, be considered as a penalty, requiring submission of the question of damages to the jury, and permitting the introduction of equitable defenses, though the measurement of such damage may be difficult.

[Ed. Note.—For other cases, see Aliens, Cent. Dig. § 112; Dec. Dig. ⚷53.]

At Law. Assumpsit by the United States against Simon Rubin and Jacob Fleischman. On rule for judgment for want of a sufficient affidavit of defense. Rule for judgment discharged.

Robert J. Sterrett, Asst. U. S. Atty., and Francis Fisher Kane, U. S. Atty., both of Philadelphia, Pa.

William Linton and Harry A. Mackey, both of Philadelphia, Pa., for defendants.

DICKINSON, District Judge. The beginnings of this controversy are to be found in Immigration Law Feb. 20, 1907, c. 1134, 34 Stat. 898, as amended by Act Cong. March 26, 1910, c. 128, 36 Stat. 263. The facts of the case are these:

An intending immigrant was found by the special board of inquiry, upon certificate of the medical examiner, to be feeble-minded. There was no appeal from this finding. The alien is in consequence within the class absolutely excluded by the act of Congress. Ordinarily this would have been followed by an order of deportation. This would

have meant deportation to Russia. As Russia was and is at war, such an order could not have been and cannot now be executed, if made. As a consequence, the alien must temporarily be detained and cared for. His friends voluntarily offered to care for him and to give bond in such sum and with such conditions as the immigration authorities thought proper. The bond in suit was accordingly given. It is in the form and with conditions provided for in another provision of the act of Congress, and contains three additional conditions, with two of which we are now concerned. One of them is that the alien during his stay in this country will be committed to and kept under the care of some institution having charge of feeble-minded persons for treatment. The other is that reports will be made of the occupation and whereabouts of the alien.

The statement of claim avers a breach of both conditions and demands judgment for $1,000, the amount of the bond. The affidavit of defense avers impossibility of the obligors committing the alien to a hospital for treatment, because the fact was that after examination the alien was found not to be feeble-minded, and that no institution would receive him as such. The affidavit asserts the further equitable defense that the bond is one of indemnity only, and that the plaintiff had sustained no loss.

We have ignored the suggestion that the plaintiff is not entitled to judgment because a copy of the bond sued upon had not been made part of the statement of claim, because the averment upon which this part of the defense was based has been withdrawn, and we have been asked to limit the consideration of the defense to the averment of fact and the legal position first mentioned.

[1] As the claim of the plaintiff is based upon an explicit acknowledgment of the debt and an absolute promise to pay it, and as the breach of the conditions is not denied, were the defense confined to a legal defense, judgment must be rendered in favor of the plaintiff. The defense, however, is not so confined.

Under the system which pertains in Pennsylvania of administering equity through legal forms, equitable defenses are always admissible in actions of assumpsit. Indeed, to all intents and purposes an action in assumpsit is a bill in equity. Inasmuch, however, as the United States is a party to this action, and as it arises out of an effort to enforce a law of the United States, the laws and established practice of Pennsylvania are those of a foreign jurisdiction.

[2-5] Section 961 of the Revised Statutes, however, contains a similar provision. It is, in substance, that in actions upon a bond such as the one in suit judgment shall not be rendered by the court for the penal sum, but for such sum as "is due according to equity," and that, if the amount is "uncertain," the cause shall, upon demand of either party, be submitted to a jury. If, therefore, this bond is one for indemnity purposes only, judgment must be refused until the damages are shown. The defense interposed may therefore be set up. Were this bond the bond authorized, and under certain circumstances required to be given by the Immigration Acts referred to (as the argument made on behalf of the defendants assumes), we would enter-

tain no doubt that it was for indemnity purposes only. This is, however, clearly not such a bond. Such a bond is given only in the case of an alien who may be admitted in the exercise of the discretion of the Secretary of Commerce and Labor. This alien belongs to the absolutely excluded class, and no executive officer may admit an alien against the declared will of Congress. This bond, therefore, if anything, is a voluntary bond, which has been accepted, not in pursuance of any act of Congress that it may be so accepted, but in pursuance of what, for want of a better phrase, may be called the common-law right of the United States. That it has this right we think is beyond successful denial. Every government, besides having an existence for the purpose of the exercise of its political powers, is an entity, is a person in law, has what may be called a corporate existence for the necessary purpose (among other things) of acquiring, holding, and asserting title to property and entering into contracts. Its rights and powers in this respect are analogous to, if not the same as, those of an ordinary corporation. Its right to be made the obligee in and to accept a voluntary bond given to it we think to be clear upon accepted legal principles, and to have been settled by a number of adjudged cases, of which it is sufficient to cite U. S. v. Tingey, 5 Pet. (30 U. S.) 115, 8 L. Ed. 66.

The legality of the bond and its breach, and that any action upon it is open to the equitable defense here interposed, being found, we are brought face to face with its merits. Out of the declared policy of the law not to enforce gambling contracts, and out of the weakness to which mankind is prone to wager any amount on a future event, or the obligor's ability to do a certain thing, has arisen the equitable doctrine of relief. A helpful guide to its application and to its limitations may be sought in almost innumerable cases. The expression which defines these limitations as accurately as any phrase can is that which is usually inserted in contracts where the purpose is to recompense by the payment of an agreed sum the party who suffers loss because of nonperformance. The phrase is, after stating a stipulated sum which the party agrees to pay, that it is to be paid "not as a penalty, but as damages fairly liquidated and agreed upon by the parties, and not to be relieved against." The phrase recognizes the distinction in damage claims between cases in which the damage is capable of easy and accurate admeasurement, and any disproportion between the actual and the agreed damages may be readily discovered, and the other class of cases in which the damage is real and substantial, and yet its admeasurement is so difficult that an agreed sum is not only a fair adjustment of the amount, but practically necessary. In the latter class of cases equity leaves the parties to their legal rights unless the amount fixed is so disproportional to any consideration of real damage as to be unconscionable, and to justify a finding that there had been no real adjustment of the amount and that the formal agreement was a pretense, and its real purpose to annul the equitable doctrine of relief. Obviously, equity can relieve the defendant from the legal obligation of the second agreement as readily as from the first contract.

The purpose of the condition of this bond is manifest. The United States wished protection, not only against the possibility of the expense

of deportation and of finding the alien in order that he might be deported, but also against the possible consequences of his temporary sojourn. He might set up relations here through marriage or otherwise which would result in the very evils which it is the main purpose of the immigration laws to minimize. The damage which would flow is one which cannot be certainly traced into a money loss of any ascertainable amount. It is none the less real, and one which has as an element a pecuniary loss. Unless, therefore, the indemnifying contract may lawfully include a reasonable and fair, and therefore equitable, agreed adjustment of the damages, it is wholly nullified. The bond in suit embodies a contract of this character. The above expression of the doctrine of equitable relief, as limited by an agreed liquidation of the amount of the damages, finds sufficient support in (among many others) the following cases: U. S. v. Rosenthal (D. C.) 210 Fed. 555; U. S. v. Bethlehem Steel Co., 205 U. S. 105, 27 Sup. Ct. 450, 51 L. Ed. 731.

[6] The foregoing propositions (in formulating which we have followed the views of counsel for the United States) are urged by the plaintiff as leading to the entry of judgment in its favor. The argument, however, overlooks this feature. There are several conditions, but only one sum named in the bond. There is no breach of some of these conditions averred. How, then, can we find that the parties agreed to the amount of the damage flowing from the breach which is averred?

The rule is that, where the parties to a contract have agreed that a sum shall become payable on a single event, such sum may be regarded as liquidated damages, but where the sum is made payable to secure the performance of several stipulations of varying degrees of importance, it is clear the stipulated sum must be regarded as a penalty, and not as liquidated damages for a part default. Had the breach averred been in the performance of the only condition to be performed, the argument addressed to us would have force. As the fact is otherwise, the argument has no application.

The rule for judgment is discharged.

SAGENDORPH v. AMERICAN METAL STAMPING CO.

(District Court, E. D. Pennsylvania. November 30, 1915.)

No. 1139.

CORPORATIONS ⚷565—INSOLVENCY PROCEEDINGS—PROVABLE CLAIMS.

Creditors of a defunct corporation, whose property and assets had been informally taken over by a new corporation having to a large extent the same stockholders, by entering into an agreement by which they accepted stock of the new company for the amount of their debts, thereby by ratification waived the right to avoid the transfer of the property of the old corporation as fraudulent, and also the right to claim that the new company had assumed their debts, and cannot prove as creditors in insolvency proceedings against the new company.

[Ed. Note.—For other cases, see Corporations, Cent. Dig. §§ 2281, 2282; Dec. Dig. ⚷565.]

In Equity. Suit by George A. Sagendorph against the American Metal Stamping Company. On exceptions to report of special master. Report confirmed.

Winfield W. Crawford and Samuel W. Pennypacker, both of Philadelphia, Pa., for exceptants.

Middleton & Blakely, of Philadelphia, Pa., opposed.

DICKINSON, District Judge. The obscured view which we now have of the facts of this case and the difficulty of grasping the significance of some of them is due to the mix-up which always results when facts, in the sense of things done, are things which were done in one situation of the parties, and their significance is attempted to be found under circumstances presenting an entirely different situation. The corporations, with the affairs of one of which we are now concerned, were not only what are commonly called "close corporations," but one was wholly and each was mainly a "family corporation." Certain members of what are designated in this record as the Sagendorph and Codman families, respectively, conceived the thought of a business enterprise. This they put in execution through the instrumentality of a nominal corporation. We say nominal, because little effort seems to have been made to keep clear the distinction between the individual rights of the members of the corporation and the rights of the corporation itself, and none at all to distinguish such rights as the members of corporation might have as stockholders and such as might flow to them as creditors or otherwise. Why these distinctions were ignored is evident. The promoters of the enterprise concerned themselves only with the profits which were to come to them. They did not have in contemplation the possibility even of the insolvency conditions with which we are confronted. It is worth the effort to attempt to get the life history of these corporations into our minds, because, if we have a clear statement of the facts, the questions which have been raised answer themselves. Some of these facts have been left to conjecture, or at least to inference.

Letters patent issued in 1902 to a corporation by the name of American Metal Stamping Company. This was a Delaware corporation. It had a nominal capital of $250,000. What, if anything, was received by the corporation in consideration of the issue of this stock, or how much was issued, we do not know. There is the probability that it received something, because the nominal value of its assets exceeded the sum which the evidence discloses came to it from other sources. We do know that it received moneys other than its business receipts. Some of this was received from individuals who were among its stockholders. Some of it was received from financial institutions which had discounted notes, or loaned on notes or other obligations and placed the proceeds to the credit of the corporation. Of some of these notes the corporation was the maker. Of some of it was the payee. Of others it was the indorsee. Some of them bear the indorsement of individual members of either the Sagendorph or the Codman families. Some of them, perhaps all of them, were accompanied by the deposit of collateral which was the individual property of some of

those interested in the company. We have no evidence of the total amount thus received by the corporation, and no direct evidence of what the transactions really were. All we have is the acknowledgment of the parties interested (made long subsequent to the time of the transactions) that $15,000 had been received under circumstances out of which a debt arose to John E. Codman of $7,500 and a like sum to L. Lewis Sagendorph. From a like acknowledgment, we are justified in the inference that the nominal value of the assets of the corporation was $32,600. This corporation had a more or less precarious existence, which so far as its business activities are concerned terminated in 1905, and (it is agreed) its legal existence ended in 1907 by what is called the forfeiture of its charter for nonpayment of taxes.

In 1905 letters patent were taken out in Pennsylvania for the charter of another corporation by the name of Enameled Art Metal Company. This had a nominal capital of $75,000. How many shares of stock had issued before June 7, 1911, and what, if anything, had been received by the corporation for the stock which was outstanding, we do not know. It might be inferred the 10 per cent. required by law was received, and as three persons not shown to be identified with either the Sagendorph or Codman families, either originally or eventually, became stockholders, it might further be inferred they paid for their stock, either as subscribers or purchasers, and we have in the agreements of 1911 the admission of the parties showing stock to have been issued for value or without it.

It is admitted by the parties, and therefore found by the master to be the fact, that the Pennsylvania corporation took over the holdings of the Delaware company and succeeded to its business without any formal transfer, and without other act of transfer than is implied in what was done. Even the act of doing this was as clouded as were all the things done. Although it is admitted that the Pennsylvania corporation carried on the business formerly conducted by the Delaware corporation, it was done, not under the name of the Pennsylvania company, but under the old name, which was the name of the Delaware corporation. The theory is advanced by all parties in interest, and because of this accepted by the master, that after 1905 the business was in fact carried on by the Enameled Art Metal Company, doing business under the trade-name of American Metal Stamping Company. What actually was done would appear to be this: The promoters of this business enterprise were given, through the laws of Delaware, a baptismal name. This was by the creation of a new person in the form of a corporation. The parties concerned, however, went ahead without any regard to the existence of this artificial person, other than to use its name. Things were done as if they had formed a partnership under that name. Later on they secured another baptismal name from the state of Pennsylvania. They continued, however, just as before, without even making use of the new name. The practical reason doubtless was to preserve whatever value the old name had as a trade-name.

This brings us, after a lengthened prelude, to June 7, 1911, when something of a change took place. The occasion for the change ap-

parently was this: The relations of the corporations with those who as individuals were concerned with the corporations had become interminably confused. The managers were borrowing money in the name of the corporation. A statement of its financial condition could not be made. Counsel was consulted, and he did the best he could (perhaps, under the conditions, the best which could be done) to bring order out of chaos.

Let us pause here to get a view of the rights of the parties in the light of the facts which they now agree to have existed. The Delaware corporation, when in existence, had assets nominally worth $32,600. It owed money to Sagendorph and also to Codman. In addition to this, each had contingent claims, dependent upon the fact of whether he was called upon to pay as indorser or his property would be taken to pay debts owing by the company to certain banks. It is too clear to call for more than its formal statement that the corporation could not give away its assets to the prejudice of its creditors, nor could it wipe out its indebtedness by the simple method of ignoring its debts. It might have made (with the consent of all concerned) a bona fide sale of its assets, receiving the consideration either in cash, or in an assumption of its debts, or in the stock of another corporation, and have distributed this consideration to its creditors and stockholders.

On June 7, 1911, the situation was this: In a very practical sense the only creditors were Sagendorph and Codman. The debtor was defunct. The property which the debtor once had was in the possession of another corporation. The directors of the defunct corporation and of the new and all the stockholders and creditors of the old were met together to decide what should be done. One method of dealing with the situation would have been to have had the new corporation assume the debts of the old and to have issued stock of the new to the stockholders of the old, to the value of the assets of the old in excess of its debts. It was thought to be impracticable to do this. One obstacle in the way was that the assumption of the debt would have destroyed the credit of the new corporation. Another was the consent of the three stockholders of the new company who were not stockholders in the old would need to be secured, and they were not present. There remained, therefore, as the only thing to be done, the issuing of stock in the new company to both creditors and stockholders of the old, to the full value of the assets received, in proportion to their respective interests.

The fact cannot be doubted that this was what counsel advised could be done, and, anticipating it would be acceptable to all, he prepared papers expressive of this agreement. This was in fact what was actually done, although the curious preference which some people have to pretend, or at least go through the form of deceiving themselves into believing, they are doing something different from what they are doing, prompted the suggestion that the agreements take the form which they have taken. If the arrangement had taken the form suggested, and the company had been prosperous, the stock dividends received could have been applied by the owners of the stock to the payment of the indebtedness. In the same event the agreement as

made would have the same result. The only real purpose which could be served by the agreement as made, which would not have been served by the agreement as suggested, is that in tying the stock together the application of all dividends to the payment of the indebtedness was assured. Whether this was only a formal or was a real difference depends upon whether the debt obligations and the stock holdings were held in like proportions. Whatever the reason, or whatever the effect of making a departure from the suggested method of accepting stock for the debt, the agreements were made. The only changes made were these:

(1) Instead of issuing stock in the new company direct to the creditors and stockholders of the old, it was issued to a trustee for them.

(2) Instead of paying dividends to the stockholders, and they applying the money to the payment of the indebtedness, it was agreed that the company should so apply the dividends. Really what appears to have been done in fact, or at least in form, was to make the dividend check (so far as dividends were paid) payable to the stockholder, and it was by him indorsed over to a bank which held the note or property of Sagendorph or Codman pledged for its payment.

In all other respects the agreement as made followed the suggested agreement.

The report of the master vindicates the conclusions reached by him that the parties to the agreement are bound by it, and that neither John E. Codman nor L. L. Sagendorph can be awarded dividends as creditors of the Pennsylvania corporation whose assets are now being distributed. There is no evidence of fraud or overreaching in securing the agreement and a consideration is not only imputed by the seals, but in fact existed.

The earnestly urged and clear-cut propositions laid down by counsel in support of the claim of John E. Codman call for specific comment. We treat them as requests for findings, and follow the alphabetical enumeration adopted by counsel.

(a) The four years referred to during which the business of the new corporation was done in the name of the old we assume to have been before 1911. It could be found to have been fraudulent only against some one prejudiced thereby. Obviously it did not deceive, and could not have affected, John E. Codman.

(b) Whether the taking by the new corporation of possession of the assets of the old was fraudulent under the statute of Elizabeth, or whether thereby the new corporation became trustee for the old, are questions beside the mark, for the reason that the only persons who could complain accepted a new arrangement for the payment of the debts due them and confirmed what had previously been done.

(c) Whatever the attitude of mind toward the agreements of June 7, 1911, with which their consideration is approached, they can be construed in no other way than as meaning that the debts of the old company were to be met, not by the new as a debt, but out of dividends on the stock of the new issued to the creditors and stockholders of the old, in payment or substitution for the assets of the old, which the new had received.

Nor do we think the master can be convicted of error in holding that the basis of the claim now made was in part to be looked for in the 1911 agreements. The debt claimed was originally the debt of the old corporation, and any injury to the creditors came to them through an injury to their debtor. The tort committed, if any was committed, by the new company, was primarily against the old company. The creditor could directly assert a claim against the new company only by assuming one or more of these positions;

(1) That payment of the debt due him had been assumed by the new company.

(2) That the creditor was attacking a transfer by his debtor which was fraudulent and void as against the creditor.

(3) That the creditor had been doubly wronged: First, by a wrong done to the corporation which was his debtor; and, secondly, by a wrongful failure to have the first wrong redressed, whereby the rights of the creditor had been prejudiced.

The agreements of 1911 meet every of these positions. There is in them the agreed fact that the new corporation had not assumed the debt. There is in them a waiver of the right of creditors to avoid the transfer by consenting to and ratifying and confirming it. There is, so far as the creditors and stockholders of the old company are concerned, a sale of whatever interests they had in the assets of the old company. Above all, there is the making of an agreement through and by which the debts due are to be paid and wiped out through the acceptance by the creditors of something else in place of whatever claims of debt or otherwise they had before held. After this the creditors clearly had no claim against the new corporation, whatever they had before.

What has been said as to the Codman claim disposes of the Sagendorph claim. The position taken in the assertion of the latter is this: The ruling of the master in rejecting both claims is acquiesced in as right and proper. If, however, one is to be allowed, both should, as they have an equal footing.

All the exceptions to the master's report are dismissed, and the report confirmed, and counsel may submit whatever further decree should be made to carry these findings into effect.

It should be added, as explanatory of the fact that we are now dealing with the affairs of the American Metal Stamping Company, that the name of the Enameled Art Metal Company was changed to American Metal Stamping Company.

WEBB v. SAMUELS et al.

(District Court, S. D. New York. March 16, 1915.)

EQUITY ⚷179—PLEADING—ANSWER.

While a defendant in equity may not be required to make discovery in his answer, if the discovery will tend to incriminate hm, or subject him to a penalty or forfeiture, he will not, on that ground, be relieved from answering, but must answer or take the consequences of his default.

[Ed. Note.—For other cases, see Equity, Cent. Dig. § 415; Dec. Dig. ⚷179.]

In Equity. Suit by Alexander S. Webb, as trustee, against Jacques Samuels, Herman H. Oppenheimer, and others. On motion by defendant Oppenheimer for extension of time to answer. Motion granted.

Root, Clark, Buckner & Howland, of New York City, for plaintiff.
Elkus, Gleason & Proskauer, of New York City, for defendants.

AUGUSTUS N. HAND, District Judge. The defendant Oppenheimer has again applied for an extension of time to answer the complaint in the above cause, upon the ground that his answer may tend to incriminate him. I had thought that the complainant could avoid raising this question by entering into the stipulation which I suggested in my former memorandum, but inasmuch as he insists that doing so will impose upon him a great additional burden in proving his case, I thave decided to pass upon the direct issue between the parties, and have reached the conclusion that the defendant must answer the complaint or submit to whatever loss or inconvenience is involved by his default.

There is no doubt under the decision cited by the defendant Oppenheimer that he will not be compelled to make discovery under circumstances where it may appear that the discovery would tend to incriminate him. Rule 30 (198 Fed. xxvi, 115 C. C. A. xxvi) of the present equity rules provides:

"The defendant in his answer shall in short and simple terms set out his defense to each claim asserted by the bill, omitting any mere statement of evidence and avoiding any general denial of the averments of the bill, but specifically admitting or denying or explaining the facts upon which the plaintiff relies, unless the defendant is without knowledge, in which case he shall so state, such statement operating as a denial. * * *"

Rule 58 (198 Fed. xxxiv, 115 C. C. A. xxxiv) provides for discovery upon filed interrogatories. I cannot see that any question of discovery is involved upon the present motion merely by reason of the fact that there is a general prayer for discovery in the bill.

The following quotations from Story's Equity Pleading and the old English case of Brownsword v. Edwards, 2 Vesey, 246, cited by counsel for the complainant, seem to be in point.

Story's Equity Pleading (10th Ed.) p. 456:

"But the objection [i. e., to discovery] is strictly confined to the point of the discovery sought, and does not affect the jurisdiction of the court to grant relief. For a party shall not protect himself against relief in a court of

⚷For other cases see same topic & KEY-NUMBER in all Key-Numbered Digests & Indexes

equity by alleging that, if he answers the bill filed against him, he must subject himself to the consequences of a supposed crime, although the court will not force him by his own oath to subject himself to punishment. Therefore, in the case of a bill to inquire into the validity of deeds upon a suggestion of forgery, the court has entertained jurisdiction of the cause; and although it has not obliged the party to a discovery of any fact, which might tend to show him guilty of the crime, yet it has directed an issue to try whether the deeds were forged."

In Brownsword v. Edwards, 2 Ves. 246, Lord Hardwicke said:

"Some collateral arguments have been used, that it is not in every case the party shall protect himself against relief in this court upon an allegation that it will subject him to a supposed crime. It is true, it never creates a defense against relief in this court. Therefore in case of usury or forgery, if a proof can be made of it, the court will let the cause go on still to a hearing, but will not force the party by his own oath to subject himself to punishment for it. In a bill to inquire into the reality of deeds on suggestion of forgery, the court has entertained jurisdiction of the cause, though it does not oblige the party to a discovery, but directs an issue to try whether forged."

The cases relied upon by the defendant Oppenheimer appear to be all cases where something in the nature of a discovery or other disclosure was required, and therefore are not in point. The defendant Oppenheimer urges that no person should be put in the position of losing anything by his failure to answer. This is an argument not without force, to which I have given due weight; but I have reached the conclusion that such an interpretation of the provisions protecting persons from incriminating themselves would result in a practical denial of all civil remedy in many cases. Wherever a person is accused of conversion of property, he could by such an interpretation of the law not only prevent parties from examining him as to the facts, and thus under settled rules of law deprive them of an extremely important privilege; but he could also entirely block any legal remedy by preventing the case from ever coming to an issue. This is extending the protection against incrimination beyond all reason or precedents.

It would be possible to discuss the question of self-incrimination in the light of the old equity procedure, which, however, has now been substantially changed by new rules. I would say, however, in brief, that even under the old practice the situation of the defendant Oppenheimer would be the same. In the case of Atwill v. Ferrett et al., 2 Blatch. 39, Fed. Cas. No. 640, heard in the United States Circuit Court for this District, before Mr. Justice Nelson and Judge Betts, it was held that a bill claiming forfeiture of a piece of music under an act of Congress and seeking a discovery was bad on special demurrer to the extent of the discovery prayed for, and the court said:

"It is an incontrovertible principle of equity law that a defendant cannot be compelled to make discoveries in answer to a bill which seeks to enforce penalties and forfeitures against him by means of such discoveries."

The remainder of the bill, however, was sustained, though a general demurrer was taken.

Mr. Langdell says in his book on Equity Pleading, at page 107:

"If a defendant conceives that the bill contains allegations or charges which he is not bound to answer, either because they are irrelevant to the case made by the bill, or because it appears upon the face of the bill that an answer to

them may subject the defendant to a criminal prosecution or to a penalty or forfeiture, the defendant, instead of stating his objections in his answer, and having the question decided upon exceptions, may demur to such allegations or charges, and thus present the question directly to the court whether he is bound to answer them or not. But it is obvious that such a demurrer is of a wholly different nature from a demurrer to relief, though the course of procedure is the same upon both. A demurrer to discovery, indeed, is not in its nature a pleading at all, but a mere statement in writing that the defendant refuses to answer certain allegations or charges in the bill, for reasons which appear upon the face of the bill, and which the demurrer points out."

It has always been held in the English common law that the defendant need not make discovery in cases where he would be subjected to a penalty or forfeiture. That I think always has been and is the extent of the doctrine. If it be remembered that the bill of complaint under the old equity pleading contained a charging and interrogating part and the answer was supposed to make discovery, the origin of the decisions relied upon by the defendant Oppenheimer will be apparent. It was always possible in certain cases that the defendant was not required to make discovery, where the discovery would tend to subject him to a penalty or forfeiture; but I have found nothing to intimate that he could prevent the case from proceeding to trial, or gain the benefit of any defense which he had the right to interpose, by insisting that, if it was interposed by him, it might tend to incriminate him.

An order should be entered granting the defendant Oppenheimer an extension to file his answer to the complaint until to and including March 24th; no further extension to be granted.

NEW YORK & BERMUDEZ CO. v. MOWINCKEL et al.

(District Court, S. D. New York. October 29, 1915.)

ADMIRALTY ⟹75—PLEADING—INTERROGATORIES.

A defendant in admiralty is not entitled to a discovery before answer, for the purpose of showing that it is not a proper party and avoiding an answer.

[Ed. Note.—For other cases, see Admiralty, Cent. Dig. §§ 559, 586, 587; Dec. Dig. ⟹75.]

In Admiralty. Suit by the New York & Bermudez Company against Johannes Ludwig Mowinckel, with the Hamburg-American Line impleaded. On motion for discovery. Denied.

Burlingham, Montgomery & Beecher, of New York City, for libelant.

Haight, Sanford & Smith, of New York City, for respondent Hamburg-American Line.

Ralph James M. Bullowa, of New York City, for respondent Mowinckel.

AUGUSTUS N. HAND, District Judge. The respondent Hamburg-American Line is seeking discovery, not for the purpose of enabling it to answer, which it can do, but because it does not wish to

answer. It says that the answer might tend to incriminate it, and, if it had discovery, such discovery might indicate that it had no interest in the controversy and is not a proper party.

I see no power under local admiralty rule 39 to grant discovery before answer. Interrogatories attached to the pleadings furnish the usual, if not the exclusive, remedy in admiralty, and, as I held in a memorandum dated March 16, 1915, in the case of Webb v. Samuels et al., 227 Fed. 948, a defendant in a civil suit must take his choice between answering or letting the proceeding go against him by default, and cannot, in my opinion, urge that he should be relieved from answering because his answer may incriminate him. Of course, he need not answer, but must suffer the consequences if he fails so to do. If the respondent, as appears to be the case, is in position to set up a defense which will be a bar to the action, it must plead it in the usual way.

The argument of counsel for the Hamburg-American Line is ingenious; but, if the course he suggests were permitted, it would be incumbent upon this court to try out by affidavits and examinations the question as to whether a party could be brought into court to plead at all. I know of no such practice, and while it may be that a preliminary hearing after issue joined might be a desirable way of disposing of some litigations without awaiting delay and expense of a formal trial, there is no such practice known to this court, and the suggestion on the part of respondent goes even one step further, and urges the court to allow a preliminary investigation to determine whether a party shall plead or not.

This should not, I think, be allowed.

TOMLJANOVICH v. VICTOR AMERICAN FUEL CO.

(District Court, D. Maine. December 4, 1915.)

No. 350.

1. NEW TRIAL ⚷77—GROUNDS—VERDICT—DISTURBANCE.

The court should not set aside a verdict for excessive damages, unless the result of sympathy, passion, or prejudice; and the award is clearly excessive.

[Ed. Note.—For other cases, see New Trial, Cent. Dig. §§ 157-161; Dec. Dig. ⚷77.]

2. NEW TRIAL ⚷162—VERDICT—REMISSION OF DAMAGES.

Where it appears that sympathy, passion, or prejudice has caused an excessive verdict, the federal court will sometimes order a verdict set aside and a new trial granted, unless plaintiff allows judgment to be entered for some smaller amount; it being the duty of the court in such case to permit a verdict for the largest amount the testimony will support.

[Ed. Note.—For other cases, see New Trial, Cent. Dig. §§ 324-329; Dec. Dig. ⚷162.]

3. DAMAGES ⚷132—PERSONAL INJURIES—AWARD.

A young miner, 19 years of age, suffered injuries, breaking parts of the pelvic girdle, dislocating some of the bones, causing anæsthesia and atrophy in his legs, and affecting some of his internal organs. It appear-

ed that such injuries were permanent, and at the time of the trial he had to use a crutch; it being doubtful if he could ever perform ordinary manual labor, though before the accident he had been vigorous and strong. *Held* that a verdict for $19,100 was excessive, and should be reduced to $15,000.

[Ed. Note.—For other cases, see Damages, Cent. Dig. §§ 372-385, 396; Dec. Dig. ⟹132.]

At Law. Action by Paul Tomljanovich against the Victor American Fuel Company. There was a verdict for plaintiff, and defendant moved for a new trial. Motion overruled, on condition that plaintiff remit part of the verdict; otherwise, sustained, and new trial granted.

A. T. Hannett, of Gallup, N. M., and Geo. C. Wheeler, of Portland, Me., for plaintiff.

Caldwell Yeaman, of Denver, Colo., and Frederick W. Hinckley, of Portland, Me., for defendant.

HALE, District Judge. This case now comes before the court upon defendant's motion for a new trial, after a verdict for the plaintiff for the sum of $19,100. The defendant alleges that the verdict is against the weight of evidence, and that the damages are excessive.

The plaintiff was a coal miner in the defendant's mine in New Mexico. He was 19 years old at the time of the injury. He was a healthy, able-bodied young man in normal physical condition. The learned counsel for the defendant urges with much earnestness that the verdict is clearly against the weight of evidence and should be set aside. Upon all the issues on which counsel have presented their arguments for and against setting aside the verdict, I find there is conflicting testimony. I cannot say that the verdict was so clearly against the weight of evidence that in view of all the conflicting testimony I ought to set the verdict aside. Within the rules of law, and within the scope of their duties, I think the jury had a right to find a verdict for the plaintiff.

[1, 2] The vital question before the court is: Were the damages excessive? The court should not set aside a verdict, unless it finds that the judgment of the jury was unduly affected by sympathy, passion, or prejudice, and that a verdict resulted which was clearly excessive in view of all the evidence. In a case where it appears that sympathy, passion, or prejudice has affected the result, a federal court sometimes orders that the verdict be set aside and a new trial granted, unless the plaintiff allows judgment to be entered for same smaller amount, for which, in the opinion of the court, the verdict may be sustained. It then becomes the duty of the court to permit a verdict for the largest amount which the testimony will support. Southern Railway v. Bennett, 233 U. S. 80, 34 Sup. Ct. 566, 58 L. Ed. 860; Occidental Consol. Min. Co. v. Comstock Tunnel Co. (C. C.) 125 Fed. 244; Yurkonis v. Delaware, L. & W. R. Co. (D. C.) 213 Fed. 537, 538.

[3] In the case at bar the evidence showed that certain parts of the pelvic girdle had been broken, and parts thereof are still out of position; that there is a dislocation of bone in the region of the

sacrum, a considerable area of anæsthesia in one of the plaintiff's legs and atrophy in one of his legs; and that the functional activities of his bladder are considerably impaired, subjecting him to great inconvenience and more or less humiliation. It is necessary at the present for the plaintiff to use a crutch. In the estimation of Dr. Thayer, the dean of the Maine Medical School, the plaintiff will never be able to resume his former occupation, and will never be able to do anything more than light work, "like keeping a peanut stand, or some such thing," as Dr. Thayer put it, and that the plaintiff will always suffer pain and inconvenience. There was considerable evidence to the contrary; but for the purposes of this motion I must assume that the jury believed the testimony adduced in behalf of the plaintiff, that they followed such evidence, and based their verdict upon it. Assuming this to be so, can the verdict be sustained? During the trial I allowed the plaintiff to strip his back and legs, and show his injuries to the jury. There was evidence of extreme suffering on the part of the plaintiff. Such exhibition of the plaintiff, and the evidence of his suffering, I think, aroused the sympathy of the jury, and induced them to award for him a greater sum than the court can sustain. The court of Maine has said that there is no precise way by which the pecuniary compensation for pain can be estimated; that latitude in judgment must be allowed the tribunal which determines it; but it is the duty of the court to say what should be regarded as the ultimate bounds, and to see that such bounds are not overstepped. Ramsdell v. Grady, 97 Me. 322, 54 Atl. 763; O'Brien v. J. G. White & Co., 105 Me. 308, 316, 74 Atl. 721.

I expressly warned the jury to be careful in the matter of estimation of damages, if they should come to that question. In spite of my instructions, I think they did exceed the limit of reason. But I must not underestimate the damages which the jury were justified in finding. The plaintiff was only 19 years old. The jury had the right to say that he may suffer permanent and painful injury for more than 40 years. It is my conclusion, however, that this verdict should not be allowed to stand for more than $15,000. Unless the plaintiff will remit all over that sum, a new trial must be granted. The entry will be:

Motion overruled, if within 30 days after the filing of this opinion the plaintiff remits all of the verdict in excess of $15,000; otherwise, motion sustained, and new trial granted.

BIRDSALL v. GERMAIN CO.

(District Court, S. D. New York. October 13, 1915.)

ADMIRALTY ⟹47—SUIT IN PERSONAM—VALIDITY OF ATTACHMENT.

Under an admiralty rule of court, providing that process in personam may be a simple citation or "such a citation with a clause therein that if respondent cannot be found his goods and chattels to the amount sued for be attached," the attachment of property of a foreign corporation which maintains an office in the district in charge of one of its officers,

who resided there, and without any effort to make personal service, is invalid, and will be vacated.

[Ed. Note.—For other cases, see Admiralty, Cent. Dig. §§ 396–403; Dec. Dig. ⚷47.]

In Admiralty. Suit by Amos Birdsall, Jr., against the Germain Company. On motion to vacate attachment. Motion sustained.

Arthur Lovell, of New York City, for libelant.

Ralph James M. Bullowa, of New York City, for respondent.

AUGUSTUS N. HAND, District Judge. The respondent moves to vacate an attachment levied in a proceeding against the respondent in personam under admiralty rule 9 of this court, which, so far as it is applicable to the matter now before the court, is as follows:

"Process in personam may be: (1) A simple citation in the nature of a summons to appear and answer to the suit; (2) such a citation, with a clause therein that if the respondent cannot be found, his goods and chattels to the amount sued for be attached. * * *"

In the present case it does not seem to be denied that the allegations of the respondent's affidavits are true that the defendant (which is a Pennsylvania corporation) was doing business in the Southern district of New York, at an office there, at No. 61 Broadway, and that its vice president has his office at that number and resides in the district.

It was held by Judge Adams, in the case of Shewan v. Hallenbeck (D. C.) 150 Fed. 231, which was a proceeding in admiralty by attachment, that it was an abuse of process for the libelant to attach the goods of a respondent without making any real effort to find him and make personal service. In that case, the respondent was an individual; but I cannot see the difference between an individual and a corporation that has an established place of business within the district in charge of one of its officers. The libelant attempts to avoid the decision of Judge Adams in the case of Shewan v. Hallenbeck, supra, by insisting that the general appearance which was entered on behalf of respondent cured all defects of process, and cites the case of Atkins v. Fibre Disintegrating Co., 18 Wall. 272, 21 L. Ed. 841, for this legal proposition.

It is undeniably true that a general appearance (if the court has jurisdiction of the subject-matter of the controversy) gives the court jurisdiction, and to that extent cures any defect of service; but I see no reason for holding that it validates an attachment, though the attachment was made to obtain jurisdiction in personam, if the attachment was improper, as in this particular case, because no real effort was made to serve the officer.

In the foregoing case of Atkins v. Disintegrating Co., the Supreme Court held that a suit in admiralty might be begun by attachment, and that the prohibition of the Judiciary Act of September 24, 1789 (1 Stat. 73, c. 20), did not apply to suits in admiralty where the statute says (section 11):

"No civil suit shall be brought before either of said courts against an inhabitant of the United States, by any original process in any other district than that whereof he is an inhabitant, or in which he shall be found at the time of serving the writ."

In argument (18 Wall. at page 298, 21 L. Ed. 841), the court adverted to the fact that the respondent had entered a general appearance and said:

"This warranted the decree in personam for the amount adjudged to the libelants."

The court went on to say, however, that:

"The stipulation for value was entered into subject to the motion to discharge the property attached; the stipulation to be canceled if the motion prevailed. * * * If the attachment clause was void for want of jurisdiction in the District Court to issue it, the seizure of the property was a trespass, and the stipulation a nullity, irrespective of the reservation which it contained."

The question was not raised, as in the case at bar, whether the attachment was invalid because the respondent could be readily found in the district; but the question raised was: Had the court in admiralty, even after a general appearance, any power to proceed in a district whereof it did not appear that the respondent was an inhabitant, or could be found, at the time of serving the writ?

Under such circumstances, Mr. Justice Swayne says in his opinion that the general appearance of the defendants "made their position just what it would have been if they had been brought in regularly by the service of process." And, of course, this is so. If the attachment was good, its value would not be impaired by the general appearance of the defendants; if it was not good, its insufficiency would not be validated by the general appearance. In other words, there is nothing in the case of Atkins v. Disintegrating Co., or in any other case that I have seen, which makes the sufficiency of an attachment affected by the filing of a general appearance.

The court undoubtedly has acquired jurisdiction of the Germain Company by the voluntary appearance of Mr. Bullowa as proctor in this suit; but the attachment should be vacated.

FISCHER v. STAR CO.

WHEELER SYNDICATE, Inc., v. SAME.

(District Court, S. D. New York. November 1, 1915.)

REMOVAL OF CAUSES ⟹102—PROCEEDINGS AFTER REMOVAL—REMAND.

Where, after removal of a cause on the ground that it involves a federal question, the pleadings are so amended as to eliminate such question, and there is no other ground of jurisdiction, it is the duty of the court to remand, under Judicial Code (Act March 3, 1911, c. 231) § 37, 36 Stat. 1098 (Comp. St. 1913, § 1019), which requires such action if it shall appear "at any time" that the case does not involve a controversy properly within its jurisdiction.

[Ed. Note.—For other cases, see Removal of Causes, Cent. Dig. §§ 218–220, 223, 224; Dec. Dig. ⟹102.]

In Equity. Suits by Harry C. Fischer and by the Wheeler Syndicate, Incorporated, against the Star Company. On motions by defendant to

---

⟹For other cases see same topic & KEY-NUMBER in all Key-Numbered Digests & Indexes

dismiss, and by complainants to remand to state court. Motions to dismiss denied, and motions to remand granted.

Kelley & Becker, of New York City, for plaintiffs.

John T. Sturdevant, of New York City (Bainbridge Colby and David Gerber, both of New York City, of counsel), for defendant.

AUGUSTUS N. HAND, District Judge. Both of these suits were brought in the state court for infringement of a registered trade-mark, and were removed to the federal court because a federal question was involved. Thereupon the complainants amended the bills, omitting all mention of the registered trade-mark, and alleged unfair competition. Now the defendant moves to dismiss on the ground that no federal questions are involved, and the complainants move to remand on the same ground.

Defendant urges that this court, having once acquired jurisdiction, cannot be deprived of it by the amendment of the bills of complaint. I do not think this is so. If the court as a federal court has jurisdiction of the suits, it must dispose of the issues; but such is not the case. There is no diversity of citizenship, nor is any federal question involved. Under such circumstances the following provision of section 37 of the Judicial Code requires that the cases should be remanded:

"If in any suit * * * removed from a state court * * * it shall appear * * * at any time * * * that such suit does not really and substantially involve a dispute or controversy properly within the jurisdiction of said District Court, * * * the said District Court shall proceed no further therein, but shall * * * remand it to the court from which it was removed."

This is in accord with the decision of the Supreme Court in Texas Transportation Co. v. Seeligson, 122 U. S. 519, 7 Sup. Ct. 1261, 30 L. Ed. 1150, and I find no case to the contrary, except Cassidy v. Atlanta Ry. (C. C.) 109 Fed. 673, and it does not seem to me in accord with the statute or the foregoing decision of the Supreme Court.

The case of Lawrence v. Southern Pacific Co. (C. C.) 180 Fed. 822, relied upon by the defendant, is not in point. There Judge Chatfield dismissed the bill in a cause which was properly removed on the ground that there was lack of an indispensable party to the cause. The Supreme Court, upon a direct appeal from Judge Chatfield's decision, dismissed the appeal upon the ground that no question of jurisdiction of the trial court was involved, but only a question of general equity jurisdiction.

The distinction to be drawn between the case relied upon by the defendant and the cause under consideration is that here it is made evident by the amended complaint that two causes are before this court which could never have been brought here, since they involved neither persons nor subject-matter of which this court has jurisdiction. A case like Lawrence v. Southern Pacific Co. could have originally been brought in the federal court, and the removal was perfectly regular. The difficulty was not with the jurisdiction of the court, but with the cause of action.

I may add that I can see no reason why this court should retain a case for disposition on the merits which under the pleadings does not involve persons or subject-matter of which it has general jurisdiction because the pleadings at one stage indicated that such jurisdiction existed. Such a course would impose a quite unnecessary burden upon this court, and enable, and indeed compel, it to deal with matters which are without its province and the purpose of the removal statute. In view of the foregoing considerations, it is unnecessary to pass upon the merits of the bills of complaint.

The motions to dismiss should be denied, and the causes remanded to the state court.

J. H. WHITE MFG. CO. v. SHAPIRO.

(District Court, S. D. New York. August 11, 1915.)

COPYRIGHTS ⟹9—SUBJECTS OF COPYRIGHT—CATALOGUE CONTAINING CUTS.

An advertising catalogue, containing cuts of brass goods, consisting largely of trimmings for electric light fixtures, may be protected by copyright.

[Ed. Note.—For other cases, see Copyrights, Cent. Dig. § 7; Dec. Dig. ⟹9.]

In Equity. Suit by the J. H. White Manufacturing Company against Samuel Shapiro. On motion to dismiss bill. Motion sustained, with leave to amend.

Arthur H. Serrell, of New York City, for complainant.

Munn & Munn, of New York City, for defendant.

AUGUSTUS N. HAND, District Judge. Complainant copyrighted its catalogue of brass goods, which consisted principally of trimmings for electric light fixtures. Defendant is charged with copying in his catalogue several of the designs for these trimmings, and with thus infringing complainant's copyrighted catalogue.

Defendant moves to dismiss the bill of complaint upon ground (f), among others, which is that the catalogue appears to be merely a trade list of articles of general merchandise, and as such not a proper subject for copyright protection under the law. In Da Prato Statuary Co. v. Giuliani Statuary Co. (C. C.) 189 Fed. 90, it was held that a catalogue containing illustration of articles for the decoration of churches might be copyrighted. A similar conclusion was reached by Judge Witmer in National Cloak & Suit Co. v. Kaufman (C. C.) 189 Fed. 215, in regard to a catalogue containing pictures of women's gowns manufactured by the complainant showing the latest fashions. Mr. Justice Holmes in Bleistein v. Donaldson Lithographing Co., 188 U. S. 239, 23 Sup. Ct. 298, 47 L. Ed. 460, speaking for the majority of the Supreme Court, sustained a copyright upon advertisements of a circus which were pictorial illustrations of the performers. In the cases of Lamb v. Grand Rapids School Furniture Co. (C. C.) 39 Fed. 474, and J. L. Mott Iron Works v. Clow (C. C.) 72 Fed. 168, it was held that pictorial illustra-

tions of furniture and artistic plumbing fixtures in a catalogue for use in advertising were not subjects of copyright.

These decisions certainly are not without much basis in reason; but I cannot see that the distinction made by them in respect to catalogues for advertising is warranted by the strict language of the statute, and the case of Bleistein v. Donaldson Lithographing Co., supra, though concurred in by only seven Justices, with a dissent by Harlan and McKenna, JJ., is binding upon me, and makes it necessary to sustain the copyright upon this motion. Section 4952 of the Revised Statutes provides that:

"The author, inventor, designer, or proprietor of any * * * engraving, cut, print, or photograph or negative thereof, or of a painting, drawing, * * * shall * * * have the sole liberty of printing, reprinting, publishing, * * * and vending the same."

Neither the merit nor purpose of the print seems to be regarded by the language of the act. It is to be remembered that the defendant may make his own print of the original. He is only precluded from copying the complainant's illustration, as he is charged with having done. If he has not done this, the suit cannot be sustained. If he has done so, the complainant may well say, in the language of Mr. Justice Holmes in the Bleistein Case, supra, at page 252 of 188 U. S., at page 300 of 23 Sup. Ct. (47 L. Ed. 460):

"That these pictures had their worth and their success is sufficiently shown by the desire to reproduce them without regard to the plaintiffs' rights."

The complainant can doubtless amend its bill of complaint, so as to obviate the technical objections (b), (c), and (d), and the bill will then state a good cause of action. The objection (e), that the complainant has not filed a copy of its catalogue, is now cured.

Upon the case as it stands, the motion to dismiss should be granted on these grounds, and denied as to the ground (f), which I have discussed, unless the complainant shall file an amended bill of complaint within 20 days.

THE DWINSK.

THE ENERGETIC.

(District Court, S. D. New York. August 9, 1915.)

ADMIRALTY ⚷124—ALLOWANCE OF DOCKET FEE.

Under the provision of Rev. St. § 824 (Comp. St. 1913, § 1378), allowing a docket fee of $20 "on a final hearing in equity and admiralty," such fee is not allowable on the entry of a decree in admiralty by consent of parties, without the submission of any question of law or fact to the court.

[Ed. Note.—For other cases, see Admiralty, Cent. Dig. §§ 836–857; Dec. Dig. ⚷124.]

In Admiralty. Suit by Bernard McLain against the steamship Dwinsk and steam tug Energetic. On appeal from clerk's taxation of costs. Sustained.

⚷For other cases see same topic & KEY-NUMBER in all Key-Numbered Digests & Indexes

Hyland & Zabriskie, of New York City, for libelant.
Ralph J. M. Bullowa, of New York City, for claimant Dwinsk.

AUGUSTUS N. HAND, District Judge. Section 824 of the Revised Statutes allows "on a final hearing in equity and admiralty, a docket fee of twenty (20) dollars. * * *" In this case, by consent, an interlocutory decree in admiralty was entered, and the damages for a collision afterwards agreed upon. There was no proof offered of any kind. I think the case falls within the principles laid down by Mr. Justice Blatchford in the case of Wooster v. Handy (C. C.) 23 Fed. 49. The test he adopted was practically that the hearing must be upon the merits, and that the decree must not follow as a matter of course. To quote his language on page 56 of the above case:

"'A final hearing in equity or admiralty,' within the meaning of section 824, * * * must be a hearing of the cause on its merits; that is, a submission of it to the court in such shape as the parties choose to give it, with a view to a determination whether the plaintiff or libelant has made out the case stated by him in his bill or libel as the ground for the permanent relief which his pleading seeks, on such proofs as the parties place before the court, be the case one of pro confesso, or bill or libel and answer, or pleadings alone, or pleadings and proofs. Nor does it detract from the force of this conclusion that what is called an interlocutory decree, as distinguished from a final decree, is often entered as the result of a decision on a final hearing."

Judge Adams reached the same conclusion in the case of Merritt & Chapman Derrick & Wrecking Co. v. Catskill & N. Y. Steamboat Co., 112 Fed. 442, where he said:

"This has been construed to mean that any final determination of the case by the court on its merits is a final hearing, carrying a docket fee. * * * It would be requisite that a bill should be decreed by the court after an examination to determine whether the facts entitled the complainant to the relief demanded."

Judge Townsend in the case of Kaempfer v. Taylor, in the Circuit Court for Connecticut, 78 Fed. 795, enunciated the same doctrine, as did Mr. Justice Brown in Cleaver v. Traders' Insurance Co. (C. C.) 40 Fed. at page 864. In the case of Coy v. Perkins (C. C.) 13 Fed. 111, Mr. Justice Gray and Judge Lowell, in the First circuit said:

"We are of opinion that upon the face of the statute the intention of the Legislature is manifest that it is only where some question of law or fact, involved in or leading to the final disposition actually made of the case, has been submitted, or at least presented to the consideration of the court, that there can be said to have been a final hearing which warrants the taxation of a solicitor's or proctor's fee of $20. * * *"

Under these authorities, I think the docket fee cannot be allowed in this case, because the decree was entered as a matter of course upon consent of the parties, and not by reason of the submission of any question of law or fact to this court.

The ruling of the clerk in taxation of costs is sustained accordingly.

C. F. STROMEYER CO. v. ALDRICH.

(District Court, S. D. New York. August 5, 1915.)

ABATEMENT AND REVIVAL ⟹73—DEATH OF DEFENDANT—REVIVAL AGAINST FOREIGN EXECUTORS.

A suit in a federal court cannot be revived against the foreign executors of a deceased defendant, who are not authorized by the laws of the state of their appointment and residence to sue or be sued beyond its own jurisdiction.

[Ed. Note.—For other cases, see Abatement and Revival, Cent. Dig. §§ 403–411, 417–428; Dec. Dig. ⟹73.]

At Law. Action by the G. F. Stromeyer Company against Nelson W. Aldrich. On motion by plaintiff to revive against executors of defendant. Motion denied.

John Delahunty, of New York City, for plaintiff.

Byrne & Cutcheon, of New York City, appearing specially to call attention to lack of jurisdiction.

AUGUSTUS N. HAND, District Judge. This action is upon a contract. The defendant, a citizen of Rhode Island, died after service of the summons and complaint upon him, and letters testamentary upon his estate were granted by the probate court in Rhode Island. The plaintiff now seeks to revive the action against his executors, who are citizens and residents of Rhode Island, have no assets of the estate within the state of New York, and have never been served with notice of this application. The motion must be denied.

If the executors had received letters from a surrogate of New York, they could be brought in as parties irrespective of any question of their citizenship. R. S. § 955 (Comp. St. 1913, § 1592); Clarke v. Mathewson, 12 Pet. 164, 9 L. Ed. 1041. If the court, however, has no jurisdiction of the executors because they are not qualified to sue or be sued here, there can be no revivor. It is not shown that they are so qualified under the laws of Rhode Island and they would not be at common law. Section 1836a of the New York Code of Civil Procedure does not apply, I think, to cases where the foreign state does not authorize executors to sue or be sued beyond its borders. Before the enactment of section 1836a, supra, there could be no revivor in the New York courts against foreign executors. McGrath v. Weiller, 98 App. Div. 291, 90 N. Y. Supp. 420. The cases of Filer & Stowell Co. v. Rainey (C. C.) 120 Fed. 718, and Lawrence v. Southern Pacific Co. (C. C.) 177 Fed. 547, are in accord with the views I have expressed. The legal principles involved are fully discussed by Judge Learned Hand in the recent case of Thorburn v. Gates (D. C.) 225 Fed. 613, and lead to the same result.

McDUFFIE et al. v. UNITED STATES.

(Circuit Court of Appeals, Fifth Circuit. November 30, 1915.)

No. 2773

1. CRIMINAL LAW ⟹697—TRIAL—RULINGS ON ADMISSION OF EVIDENCE—EXCEPTIONS.

Exceptions to rulings on the admission of evidence in a criminal case, taken after the evidence has been closed on both sides, are too late.

[Ed. Note.—For other cases, see Criminal Law, Cent. Dig. §§ 1645-1650; Dec. Dig. ⟹697.]

2. CRIMINAL LAW ⟹670—TRIAL—EVIDENCE.

The exclusion by the court in a criminal case of all of the books, checks, letters, and other papers pertaining to a business, offered by defendants in a mass, without specifying any part which might be material, *held* not error.

[Ed. Note.—For other cases, see Criminal Law, Cent. Dig. §§ 757, 1593-1596; Dec. Dig. ⟹670.

In Error to the United States District Court for the Northern District of Texas; Edward R. Meek, Judge.

Criminal prosecution by the United States against R. H. McDuffie and W. C. Lowery. Judgment of conviction, and defendants bring error. Affirmed.

C. W. Nugent, of Conroe, Tex., and John W. Pope, of Dallas, Tex., for plaintiffs in error.

James C. Wilson, U. S. Atty., and Wm. E. Allen, Asst. U. S. Atty., both of Dallas, Tex.

Before PARDEE and WALKER, Circuit Judges, and SPEER, District Judge.

PARDEE, Circuit Judge. The plaintiffs in error were charged by indictment with misuse of the mails in connection with a scheme to defraud, in violation of section 215 of the Criminal Code of the United States. Act March 4, 1909, c. 321, 35 Stat. 1130 (Comp. St. 1913, § 10385). The indictment contains four counts, the plan or scheme in all being substantially the same. The first two charge that by the scheme in question the defendants intended to secure consignments of produce without paying therefor. In the third and fourth it is charged that in the manner alleged the defendants intended to charge and collect an unearned brokerage from their consignors, and instead of selling the produce of those they represented to bona fide purchasers at the best obtainable price, that they would sell same to themselves under another name as purchaser, at the lowest price the consignors could be induced to accept for such produce.

The scheme to effect the above objects was that defendants would represent themselves to be engaged in the commission or brokerage business under the firm name of McDuffie & Lowery, as marketing agents for growers and shippers of fruit and produce, and that in this manner they would induce shippers to consign to them quantities of such commodities to be sold by said McDuffie & Lowery for the benefit of

⟹For other cases see same topic & KEY-NUMBER in all Key-Numbered Digests & Indexes

such shippers, in Dallas and surrounding territory; that they would engage in the jobbing business under the names of R. E. Rife and Rife Produce Company, at Dallas and Waxahachie, Tex., and when produce was received by them as brokers they would pretend to sell same to R. E. Rife or the Rife Produce Company, which was but another designation for the same concern, conducted by McDuffie & Lowery; and that by means of these fictitious trade-names they would be enabled to conceal their identity and liability from the shippers and to secure the produce of their principals and convert same to their use without paying therefor. Secondly, in other instances, they would pretend to sell such produce at the best obtainable price, and would represent that it had been sold to R. E. Rife or Rife Produce Company, supposedly an independent concern, whereupon they would charge a brokerage of $10 per car for selling to themselves, and, representing themselves and the shippers, would secure such produce at the lowest price for which it could be had, without regard to the interest of their principals.

On the trial both defendants were found guilty upon all four of the indictments, and sentences followed to each of three years in the penitentiary. The case is brought for review to this court on three assignments of error, as follows:

"(1) The court erred in refusing defendant R. H. McDuffie the right to testify in detail as to how he treated the firm known as the Rife Produce Company or R. E. Rife, when the defendants, R. H. McDuffie and W. C. Lowery, would sell produce to R. E. Rife and the Rife Produce Company. That the court erred in restricting the scope of defendants' testimony relative to his transactions with R. E. Rife and the Rife Produce Company, because there is no direct testimony in the record which shows that the defendants formed the Rife Produce Company or used the said R. E. Rife for the purpose of defrauding, and that to have legally convicted them upon the charges in the indictment the government was compelled or would be compelled to show that the manner and trend of all the transactions with R. E. Rife and the Rife Produce Company by evidence would lead to the irresistible conclusion of their guilt, and, that being true, then the defendants were entitled to testify as to all transactions they had with R. E. Rife and the Rife Produce Company, as alleged in the indictment.

"(2) The court erred in permitting any testimony whatsoever to be presented to the jury in connection with the A. C. Quigg transaction with defendants, R. H. McDuffie and W. C. Lowery, because the testimony as shown by the records discloses the fact that all the transactions which led up to the securing and obtaining of and from A. C. Quigg certain potatoes as alleged in the indictment were contracted for and secured before the formation of the Rife Produce Company and before the employment of R. E. Rife by the defendants. That the court erred in permitting the government, over the objection of defendants, to go into and lay before the jury the A. C. Quigg transaction with the defendants in detail, because the records show and did show, at the time counsel for defendants objected to the introduction of the Quigg transaction as testimony, that whatever thing of value had been secured of and from A. C. Quigg was done so by contract entered into by the defendants and A. C. Quigg long prior to the establishment of the so-called artifice and scheme to defraud, as alleged by the government in the indictment.

"(3) The court erred in failing to instruct the jury on the allowing of circumstantial evidence, there being no direct evidence of the formation of any scheme and artifice to defraud by either of the defendants, because this matter was called to the court's attention and a special request made of the court, and requested of the court before be delivered his charge to the jury, such special request and such special charge being in writing."

On page 386 et seq. of the transcript we find the plaintiff in error McDuffie testified in detail with regard to a certain car 1948, said to have been handled by R. E. Rife, as follows:

"Mr. Nugent: Now, Mr. McDuffie, I want you to state to this jury now whether or not, in the handling of this car 1948 through Rife, you treated Rife in that matter the same or different from the way you treated your other customers with reference to rebates, guaranteed prices, etc. A. Treated him the same.

"Mr. Wilson: That is a conclusion; call for the facts. What was the relation?

"The Court: I sustain the objection for this reason: That it would involve enlarging the scope of this investigation too much.

"Mr. Nugent: Will the court permit us at this juncture to respectfully take a bill?

"The Court: Yes.

"Mr. Nugent: We except.

"The Court: The bill will be qualified by the statement of the court that the necessary effect of permitting the question propounded to be answered—the question itself involves a conclusion on the part of the witness—would be that the scope of the investigation would be enlarged thereby, because the government would be permitted to go into an investigation of how the witness on the stand treated each of the purchasers of commodities, or the nature of his transactions; and therefore the question is excluded on the ground that the scope of the inquiry would be so enlarged, and on the further ground that it involves a conclusion of the witness, and, further, that the determination of that fact may be better ascertained from all the facts and circumstances surrounding the transaction rather than from the witness' statement of a conclusion."

The judge's reasons for his ruling are sound.

Again we find, while the same witness was on the stand, the government without objection offered in evidence certain exhibits found in the transcript; whereupon:

"Mr. Nugent: Mr. McDuffie has already identified these books, records, and various checks aggregating about $168,000. We desire now to state that we offer these to the jury and to your honor—this entire mass of testimony in these books, vouchers and checks, of every kind.

"The Court: Of course, if they are offered, they become a part of the record of this case. I would hate to have to go into that evidence as to what they contain. I don't want just an omnibus offering of all the books and everything, without definite testimony or explanation in regard to them. It will be a very expensive matter for one having to appeal, if such a thing should be done in this case, if such a thing should occur, to take up that as a part of the record.

"Mr. Nugent: We feel it is due our client in this case, to be absolutely fair with the court.

"The Court: I don't consider that fair.

"Mr. Nugent: We desire to state that all these books and vouchers and records of every kind are submitted to the government's counsel for examination.

"Mr. Wilson: If they want to point out any particular part, they may do so; but they can't show anything—

"The Court: The court and the jury of course will not go into that evidence in the absence of evidence tending to explain or elucidate them. I would not undertake, and I would not permit the jury, in the absence of explanatory evidence, and the admission of these books in evidence, even if the jury should call for them in some part or portion that had not been theretofore explained by oral evidence on the witness stand; it would not tend to clarify but to confuse.

"Mr. Nugent: I would like to say, at least in my own defense in the matter, this, your honor: That we have absolutely nothing in the record of these

boys to conceal, and we want to say to your honor that we are perfectly willing for your honor and the jury to see anything that we have here, and I tender it now to your honor and to the government's counsel—anything connected with these boys, in any shape, manner, or form. We do that we assure your honor in the very best of faith.

"The Court: It is quite beyond the physical capacity of the court to inquire concerning all these checks, account books, memorandum or cash books, or bank books, beyond the scope of the examination of the witness on the witness stand. I understand the spirit of the offer; that I may not be misunderstood, I say I understand the spirit in which the offer is made. I simply indicate or state the attitude of the court and jury, in the matter of accepting the offer.

"Mr. Nugent: I assure the court I am acting in the highest conception of my duty to the court, acting in the very best faith."

To this ruling no exception appears to have been reserved at the time, but after the evidence was closed on both sides we find the following:

"Both sides closed.

"Be it further remembered that upon the trial of this cause, and while the witness R. H McDuffie was upon the stand, testifying orally on behalf of the defendants, counsel for the defendant propounded to him the following question: Q. Now, Mr. McDuffie, I want you to state to this jury whether or not, in the handling of this car No. 1948 through Rife, you treated Rife in that manner the same or different from the way you treated your other customers with reference to rebates, guaranteed prices, etc? A. Treated him the same.

"Mr. Wilson: That is a conclusion; call for the facts. What was the relation?

"The Court: I sustain the objection for this reason: It would involve enlarging the scope of this investigation too much.

"Mr. Nugent: Will the court permit us at this juncture to respectfully take a bill?

"The Court: Yes.

"Mr. Nugent: We except.

"The Court: The bill will be qualified by the statement of the court that the necessary effect of permitting the question propounded to be answered (the question itself involves a conclusion on the part of the witness) would be that the scope of the investigation would be enlarged thereby, because the government would be permitted to go into the investigation of how the witness now on the stand treated each of the purchasers of commodities and the nature of his transactions with them. The question, therefore, is excluded on the ground that the scope of the inquiry would be so enlarged, and on the further ground that it involves the conclusion of the witness, and, further, that the determination of that fact may be better ascertained from all the facts and circumstances surrounding the transaction rather than from the witness' statement of conclusion, to which action of the court the defendants then and there excepted and still except.

"Be it further remembered that while W. C. Lowery, one of the defendants in this cause, was upon the stand, and after he had testified that long prior to February 1, 1914, he was in the state of Idaho, and that he had met A. C. Quigg, and during the month of November, 1913, had an agreement and understanding with A. C. Quigg, by which he and R. H. McDuffie did obtain of and from A. C. Quigg, certain potatoes to be handled by the firm of McDuffie & Lowery of Dallas, Tex., the following was propounded to the said W. C. Lowery by the district attorney: Q. That understanding—who made that understanding and agreement? A. We had to arrive at—

"Mr. Pope: I want to object to any question in connection with the Quigg matter for this reason: The testimony of this witness has for the first time in this case disclosed, or it has been disclosed for the first time, that this scheme and artifice charged in the indictment was formed, as far as the testimony here is concerned, was formed about February 1, 1914. The wit-

ness has testified that he made a contract or agreement with Quigg to ship cars prior to that date, and the government, we take it, is not entitled to question him as to the Quigg matter, unless they first establish by competent testimony that the scheme or artifice was devised or formed to defraud before that agreement was made, and that scheme or artifice was used, and in use of it they had defrauded some one.

"The Court: I overrule the objection; go ahead.

"Mr. Pope: We would like to have our bill.

'The Court: You may have your bill. The court rules that, even though it was not part of the alleged scheme and artifice to defraud, which is alleged to have been devised, and is not at all pertinent to one of these, it would still be material, and the bill will show. It is material and competent to show and reflect, if it did reflect, on the purpose of the defendants in doing what is alleged to have been done, if done by them. ,Go ahead.

"To which action defendants excepted and still except."

[1] Exceptions taken to the ruling on the admission of evidence would seem to come too late after the evidence had been admitted practically without objection and the evidence closed on both sides.

[2] But, aside from this, we find no merits in the said assignments of error, because there was direct testimony in the record showing that the defendants formed the Rife Produce Company and used the said R. E. Rife for the purpose of defrauding, and the ruling of the court in this regard, giving the fullest effect that could be claimed, was the excluding of evidence offered in a mass of books, letters, checks, papers and documents, without specifying the particular ones that might possibly be material, all of which would embarrass the court and jury in the regular procedure in the case. Its exclusion, because offered in a mass and not offered separately, did not deny the defendants the right to offer separately and specifically any particular evidence that they deemed material.

The Quigg transaction was testified to at great length without any objection noted, and we find no motion to strike out evidence, no demurrer to the indictment, nor motion for an instructed verdict on the second count.

The third assignment of error is not well taken, because the charge given by the judge is not included in the bill of exceptions, and non constat the point in regard to circumstantial evidence was therein sufficiently covered. Beside this, the proposition submitted in this particular was properly refused, because the evidence showing the formation of the scheme and artifice to defraud charged in the indictment was not wholly circumstantial, and the charge requested would have tended rather to mislead than enlighten the jury.

Judgment affirmed.

ALPHA PORTLAND CEMENT CO. et al. v. SHIRK.

(Circuit Court of Appeals, Seventh Circuit. October 5, 1915.)

Nos. 2216, 2260.

1. VENDOR AND PURCHASER ⟹130—PERFORMANCE OF CONTRACT—MARKETABLE TITLE.

The fact that an abstract of title shows a chain of conveyances under which a vendor claims, extending back a sufficient time to give title by prescription, does not make the title so shown a marketable one; lapse of time being only one of the elements necessary to give title by prescription.

[Ed. Note.—For other cases, see Vendor and Purchaser, Cent. Dig. §§ 245–247; Dec. Dig. ⟹130.

Marketable title, see note to New York Life Ins. Co. v. Lord, 40 C. C. A. 592.]

2. VENDOR AND PURCHASER ⟹112—PERFORMANCE OF CONTRACT—PARTIAL FAILURE OF TITLE.

Under a contract for the sale and conveyance by good and marketable title of tracts of mineral land to be used together for the purposes of a cement plant, failure in title to any material part of the land releases the purchaser from the obligation of the contract.

[Ed. Note.—For other cases, see Vendor and Purchaser, Cent. Dig. §§ 199, 200; Dec. Dig. ⟹112.]

3. VENDOR AND PURCHASER ⟹130—PERFORMANCE OF CONTRACT—MERCHANTABLE TITLE.

An equitable title is not a merchantable title as between vendor and purchaser.

[Ed. Note.—For other cases, see Vendor and Purchaser, Cent. Dig. §§ 245–247; Dec. Dig. ⟹130.]

4. VENDOR AND PURCHASER ⟹113—CONTRACT FOR SALE OF STONE LAND—REPRESENTATIONS AS TO QUANTITY AND QUALITY OF DEPOSIT.

Examination by the purchaser of land containing a limestone deposit under a contract for its sale and purchase for the purpose of establishing Portland cement works *held* such as contemplated by the contract, and to have demonstrated that the land did not contain the quantity and quality of limestone required by the contract to bind the purchaser to complete the purchase.

[Ed. Note.—For other cases, see Vendor and Purchaser, Cent. Dig. § 201; Dec. Dig. ⟹113.]

Appeal from the District Court of the United States for the District of Indiana; Albert B. Anderson, Judge.

Suit in equity by the Alpha Portland Cement Company and Fannie B. Gerstell, as administratrix, against Elbert Walker Shirk, with cross-bill by defendant. From a decree dismissing both bill and cross-bill, both parties appeal. Affirmed on defendant's appeal, and reversed on complainants' appeal.

See, also, 210 Fed. 223.

Appellants filed their bill seeking to establish and foreclose a vendee's lien against certain premises situate in Lawrence and Jackson counties, Ind., constituting a cement manufacturing plant, but not then in operation. The bill alleges that, influenced by representations as to the title and material conditions of said premises as suitable for the purpose of a cement manufacturing plant, appellants, through the individual appellant's decedent, one A. F. Ger-

stell, entered into a contract in writing, dated December 18, 1911, to purchase said plant for the sum of $450,000 from appellee, who represented himself as the owner thereof. By the terms of the contract appellants were to pay $25,000 down and the balance as therein provided. The property in Lawrence county, appellee claimed, consisted of 312 acres containing limestone, and that in Jackson county consisting of 30 acres, more or less, containing shale—both limestone and shale being required in the manufacture of Portland cement. The balance of the plant contracted for consisted of all the implements, machinery, and appurtenances of every description used in connection with the operation of a cement factory. The contract also covered all desired existing contracts inuring to the benefit of appellants, not including claims for moneys or damages. The foregoing property was to be free from all liens, claims, or incumbrances of any kind whatsoever arising either in law or equity. Gerstell was therein given time until March 1, 1912, to examine title and contents of the said lands to ascertain whether appellee's title was good and merchantable, and whether the limestone was of the quality, conditions, and extent thereinafter set out.

Clause 7 of the contract, so far as material here, reads as follows, viz.: "It is also understood and agreed between the parties that unless the tract of land in Jackson county, Ind., described in paragraph 2 above named, shall contain a deposit of shale suitable for the manufacture of cement, sufficient to supply the requisite amount of shale for a cement mill with a capacity of 2,000 barrels of cement per day for a period of 50 years; and unless the quality of limestone deposit contained on the land named in paragraph 1 above shall average at least 90 per cent. carbonate of lime, and unless the strata of dolomite or magnesia stone contained in said stone deposit shall together average an aggregate thickness of less than 3 feet, and unless the burden of clay or material lying above the limestone shall average in height not over 8 per cent. of the total height of the quarry from the present bottom level thereof to the extreme upper surface of the land, and unless the limestone is approximately coextensive in area with all that portion of said premises which lies on a level above the present bottom of the present quarry as it now exists, the party of the second part may, at his option, by written notice to said first party, stating wherein the premises fail to meet the requirements in this paragraph 7 contained, but only at any time before March 1, 1912, refuse to accept the property named in this agreement and the sum of $25,000 shall thereupon be repaid by said first party to said second party. It is understood that the character and extent of the formation of the limestone is to be determined by drilling, that the cost of said drilling is to be paid by the party of the second part, and that the party of the first part agrees to permit the party of the second part, his agents and representatives, to go upon the premises at any time, and at all times, up to March 1, 1912, for the purpose of inspecting the same or any of the property located thereon, and for making drillings thereon. It is understood, however, that the party of the first part is entitled to be notified of such drilling, so that he may inspect all the cores and materials removed from all the drillings and take samples thereof. And the party of the first part hereby covenants and agrees, upon payment to him of the consideration hereinbefore named, to convey the property described in paragraphs 1 and 2 hereof, to the party of the second part, in fee simple, clear of all incumbrances whatsoever, by a good and sufficient warranty deed, and also to execute such bills of sale or other conveyances or assignments of the personal property named in paragraphs 3 and 4 hereof as the said second party shall reasonably require. The party of the first part is to furnish to the party of the second part, within 10 days from the date hereof, good and sufficient abstracts of the title to the lands hereinbefore named, at his own expense, brought down to date, which shall show a good and merchantable title in the party of the first part."

Gerstell, it is further stipulated, promised, subject to the foregoing agreement, that if the title to the property, real and personal, was in appellee free and clear of all incumbrances whatsoever, he would complete the payment of the purchase price. On such payments being made, appellee agreed to deliver to Gerstell good and sufficient deeds, bills of sale, and assignments of said property. In case of material defects or objections to the title to the

said lands, appellee had 60 days to cure the same after written notice thereof. If these were not cured in 60 days, Gerstell might elect to take the title as it was, or require repayment of the $25,000 and reimbursement for reasonable expenses incurred in the inspection and examination of the property and the title thereto, whereupon appellee should be released from liability under the contract. Time was made the essence of the contract. Provision was also made for the forfeiture of the $25,000 in case Gerstell failed to carry out his payments as agreed.

The said bill thereupon alleges that Gerstell, acting for corporation appellant, paid the $25,000 in pursuance of the contract "on account of the purchase price of said land"; that appellee furnished abstracts of title, but that these did not show good and merchantable title to said lands in himself; that an examination of the record title, in addition to what was shown by the abstracts, made at large expense and in various places, disclosed that appellee did not have good and merchantable titles to said lands free from all liens and incumbrances, or that the same aggregated 312 acres in Lawrence county, but only 267.45 acres, or that the said shale tract aggregated 30 acres, but only 26 acres; that by reason of the fact that, at the time of the conveyance to it of a portion of said premises, one of the parties, through whom the title thereto came being a foreign corporation, viz., the Midland Portland Cement Company, had not complied with the Indiana law authorizing it to do business or own real estate in that state, the title to said portion had escheated; that certain other portions of said land did not appear to have been properly conveyed from the government, for the reason that the patent was not properly executed; that the title to a portion thereof derived through one Wm. Humston, is at best only an equitable title; that certain preferred stockholders of the Midland Portland Cement Company, through whom appellee's title comes, have outstanding liens of record against said Lawrence county lands; that as to a portion of said lands, there appears of record doubt as to whether one John Borland, through whom appellee claims, conveyed a good title by his deed to one Mallott; that the title to a 16-foot strip along the western boundary of a certain 19.3-acre tract of said land, excepted from the conveyance by one Day to one Glover, was still outstanding in Elizabeth Day; that the title to a portion of said premises comes through one John Borland, who devised it to Matthew Borland, who never conveyed it; that the record shows that the several lots or tracts of said land were mortgaged by one Richard Evans to the state of Indiana, and later conveyed by the state of Indiana to William M. Humston through partition proceedings of whose land appellee claims, but no record appears of conveyance of the fee by Evans; that there exists in favor of certain Rariden heirs an expressly reserved vendor's lien taken as an indemnity on May 31, 1906, against liens resting upon lands taken in part payment of the purchase price of said premises by the United States Cement Company, through whom appellee claims title, which liens are not shown to be released of record; that the sale of said premises, except the Rariden tract, by the Midland Portland Cement Company to the United States Cement Company in May, 1904, was made without the consent of owners of 3,435¼ shares of the common stock of the company, giving their names; that the sale was ineffective against such stockholders, said sale being an attempted dissolution of said company and illegal; that one Walls, wife of H. H. Walls, has a one-third interest in certain of the tracts of land covered by the contract, not having joined her husband in his deed as trustee to one Frank Day, dated March 17, 1892, no cestui que trust being disclosed, whereby it is charged Walls individually owned said premises; that said Jackson county land was the property of one James Hamilton, who devised the same to his children; the will was probated, but no executor was appointed; it was not shown of record that his widow's rights have been released in said premises, she having a statutory right to one-third thereof on renouncing the terms of the will; that there was outstanding on said Jackson county land a mortgage to secure $4,000, given by the United States Cement Company to one Andrew F. Robertson on February 5, 1909; that there was no means of access to said Jackson county lands; that one Robertson, who conveyed said Jackson county lands to appellee's predecessors in title reserved and still held the right to all the growing timber on said land, of which there is a large

amount, and to enter thereon for the purpose of removing it. For all of which reasons, the bill alleges, the appellee had not a good and merchantable title, free from all liens and incumbrances, to said premises covered by said contract; that appellee waived his right to correct the title to said land, and agreed to refund said $25,000 and expenses, but has failed to do so.

Appellee, by way of answer to appellants' objections to said title, admits that the Lawrence county tract contains only 267.45 acres, but insists that fact is immaterial, since the contract covers the cement plant by references to other conveyances, etc., and that the same is substantially true of the Jackson county land; charges that the Midland Portland Cement Company had the right under the statute of Indiana to own land for purposes of its business and to convey the same, and denies that title to said land escheated; alleges more than 20, and in some instances more than 80 years' adverse possession of said Lawrence county lands under said alleged defective United States patent; that he and his grantors have been in open and adverse possession of the Humston tracts since the year 1816. The answer denies that he was bound by the terms of his purchase to protect or pay any lien of said preferred stockholders of said Midland Portland Cement Company, or that they held a lien; charges that the same were cut off by mortgage foreclosure; that appellants can protect themselves as to the balance due upon these alleged liens out of the balance due on the present contract; that "defendant is now and always has been ready and willing that said unpaid purchase money to the amount necessary may be applied by plaintiffs to the satisfaction of said lien"; that the apparent outstanding title in John Borland grew out of a mistake in description; that he was about to procure a deed for said 16-foot strip when appellants notified him they would not take the title, irrespective of said strip; that he now owns said strip, and is ready to convey it to appellants; that he and those through whom he claims have been in open and notorious adverse possession of that part of said premises acquired through Thomas J. Francis and William C. Mitchell ever since the year 1852, and that Matthew Borland never had possession thereof, or of any part of it; that the apparent outstanding title in Richard Evans grew out of a misdescription; that appellee's title came through Humston, who, in 1837, was in possession; that Lavinia Humston took possession of said premises under partition decree in 1872, and so remained until 1882, when she conveyed to one under whom appellee claims by mesne conveyances, and that those under whom he claims have had open and adverse possession thereof for more than 40 years; that appellee admits the facts of the Rariden vendee's lien, but that appellants are fully protected by the balance of $425,000 due on the contract, which he is ready and willing to have applied to extinguish those liabilities; that the mortgage to the Security Trust Company of Indianapolis, on January 1, 1902, to secure $500,000 bonds, by the Midland Portland Cement Company, was foreclosed, and appellee acquired title by purchase at that sale, and not exclusively through purchase from the Midland Portland Cement Company's deed; denies that the widow of H. H. Walls has any interest in said premises; says that he has procured a deed from her; that he could have procured it sooner, had appellants' rejection of said title and premises by reason of the quality of stone, etc., not made it unavailing, but is now ready and willing to convey the same to appellants. The answer charges that Rebecca Hamilton has no interest in said premises in Jackson county, because under the then existing statute of Indiana it was her duty to affirmatively elect to take under the statute, instead of under the will, which she did not do; that said land was subject to a $4,000 mortgage to Andrew F. Robertson, which still is a liability to the amount of $2,000, which he would have paid, had appellants not rejected said title, and that he is now ready to discharge the same; that appellants have access to said Jackson county land, all that is required in removing the shale; that the timber reserved by Robertson is small, and only good for firewood, and was an obstruction to the mining and removal of the shale. Appellee thereupon says he was at the time of executing said contract and still is vested with a good and merchantable title in fee simple to said land.

The foregoing is a statement, in substance, of the allegations of the bill and answer as to the several claims of the parties hereto with reference to

the title of said premises. The bill thereupon proceeds as follows in reference to the quantity and quality of the Portland Cement material contained upon said premises, viz., that by paragraph 7 of said contract it was agreed that the carbonate of lime in said limestone rock on said premises in Lawrence county would upon inspection be found to average 90 per cent., whereas it does not average more than 86 per cent., whereby the value of said property for cement manufacturing purposes is greatly reduced; that appellee was duly notified when appellants began drilling cores in said limestone rock and otherwise making examinations of said limestone, and at all times during the progress of said work, so that he might be present or represented for the purpose of verifying such tests; that appellants used due diligence in making said tests and in preserving and making chemical analyses, etc., and in ascertaining the average of carbonate of lime to be not more than 86 per cent.; that they were therefore not bound to proceed with the said purchase; that said property was the only property of appellee liable to execution in said district; that appellants have a lien thereon for the $25,000 paid on account and for expenses incurred, and amounting to $5,039.16, or a total of $30,039.16, with interest, for the enforcement of which appellants pray the decree of the court.

To this portion of the bill appellee answers that appellants did not at first claim that the quantity or quality of limestone suitable, or of dolomite unsuitable, for the manufacture of Portland cement contained in the Lawrence county land, was in any way otherwise than or different from that warranted by the terms of the contract in respect thereto, nor did they make any objection thereto provided the objections to the title were adjusted within the time allowed; that while appellee was remedying such defects as were material, appellants raised the objection to the quantity and quality of the stone and refused to perform; that appellee had advised appellants theretofore that all material defects of title objected to would be cured within the time limited in the contract; that appellants, on February 19, 1912, refused in writing to accept the property and perform said contract and demanded payment of said sum; that the core drill holes were not located with his knowledge and approval; that appellants made no adequate examination of said lands by drilling as required by the contract, or that he was notified of the time and place of the drillings made; that limestone averaged as stated in the contract; that only two holes were drilled, and these at opposite extremities of said Lawrence county land; that whatever was shown by said drillings would not indicate the average thickness of the dolomite or magnesia strata or limestone; that the tests of all kinds were not such as to give a fair average; that the average aggregate thickness of the strata of dolomite was not in excess of 30 feet, or more than 3 feet, and charges that the stone was as represented in the contract; that the carbonate of lime averages 97 per cent.; that appellants did not use due diligence in accumulating and preserving samples of rock and in making analyses; alleges appellee's ability and willingness to perform, and prays that appellants be decreed to specifically perform said contract.

To this answer and cross-bill appellants made reply, denying that appellee ever notified them that he had cured said defects of title and was ready to convey, except in his said answer, and that said defects were not remedied within the time limited in the contract or extension thereof. Appellants introduced various exhibits in support of the allegations of their said bill, which, in the main, support the statements of the bill as to the condition of said title. The abstracts of title in several cases fail to show title in appellee, notably where title is claimed by prescription and adverse possession. Experts were introduced who had analyzed the cores to ascertain the quality of the limestone. These witnesses testified that the carbonate of lime averaged less than 96 per cent. A topographical map of the premises was admitted in evidence. Appellants did not confine their examinations to drillings. Trenches were dug, outcroppings exposed at various locations on said Lawrence county land were examined and analyzed, and the abandoned quarry was examined, as well as the present quarry. The experts for both parties agreed that, allowing for a dip of 1 per cent. known to exist in the stone strata of that region, the tops of the large bodies of magnesia stone as shown in the two drill holes

were at the proper elevations to indicate a continuance of the same bed. Samples were produced off the face of the present quarry, which showed a strata of magnesia stone averaging between 2 and 3 feet in thickness, which seems to have been the basis for the covenant as to the limit of thickness of dolomite. This strata corresponded in elevation with a band of dolomite of the same thickness shown in drill hole No. 3, which fact served to corroborate the evidence as to the extent of the bed of dolomite. Examinations showed that the beds of magnesia which were discovered constituted about 65 per cent. in thickness of the limestone deposit above the present top of the quarry. A number of witnesses were examined on the thickness of the dolomite deposit, and the evidence is voluminous, too much so to admit of recapitulation in detail here. The District Court was of the opinion that the evidence, under the terms of the contract, should be confined to the drillings, and admitted the other evidence offered as to the quality and quantity of the limestone simply that this court might have it before them, declining to consider the same himself.

It was shown by experts that it was essential to make surface and other tests and to take into consideration other facts in order to calculate the disclosures made by drilling, as, for instance, the established scientific facts with regard to the limestone deposit including the sedimentary origin—the dip of the different strata of rocks, the topography of the land, its elevations with regard to the exposed quarry face, which was in the Mitchell strata, and not the oolitic, and all other data which would assist in making calculations. Appellee introduced certain experts and others who testified that the amount of dolomite and the quantity and quality of limestone could only be arrived at by a large number of drillings, from 60 to 100, which would have cost about $1,000 per hole. While it is denied, the evidence seems to establish as a fact that appellee was advised of the methods pursued in making examinations and not to have objected thereto. It appears that the Mitchell formation of stone lies on top of the oolitic and above the level of the floor of the present quarry. Thus it appears that the entire deposit here involved was the Mitchell formation; i. e., 180 acres out of 204 acres of limestone. Several of appellee's witnesses were building stone quarrymen, and were experienced only in oolitic stone and their testimony must be read in the light of this fact. The former state geologist of Indiana, after testifying for appellee that the extent of the strata shown at drill holes was not demonstrated by the sinking of the two drill holes, conceded that, assuming the elevation and levels to be as testified by appellants' witnesses, the 30-foot band of dolomite or magnesia as shown in the two drill holes probably was continuous between the two holes, or about 2,600 feet. The said drilling tests were made on land 60 feet or more above the top of the present quarry, viz., 110 feet above the land of that quarry floor, which body contains strata of magnesia limestone over 30 feet thick on the average, it is claimed. It appears that appellee, when advised in writing of the rejection of said property, made no protest as to sufficiency of the tests, but suggested another proposition and agreed to refund the $25,000. Two witnesses testified to this as against the testimony of appellee. This evidence is supported by the correspondence. A telegram is in evidence in which appellee advised Gerstell that he had found rock adjacent to the quarry and was arranging to test it.

The court dismissed both the bill and cross-bill for want of equity. Appellants present a number of assignments of error which go to the action of the court upon the facts stated. Appellee assigns as error the dismissal of his counterclaim.

Addison C. Harris, of Indianapolis, Ind., and Louis H. Porter, of New York City, for appellants.

Ferdinand Winter, of Indianapolis, Ind., for appellee.

Before BAKER, KOHLSAAT, and MACK, Circuit Judges.

KOHLSAAT, Circuit Judge (after stating the facts as above). The main contentions here are: First, were appellants, under the facts as

stated, entitled to a decree for the $25,000 paid as earnest money to appellee, and to the sum paid out as expenses incurred in investigation of said title and the quality and quantity of the stone deposit on said land? and, if not, second, was appellee entitled to a decree of specific performance of said contract against appellants?

[1, 2] Without determining the legal effect of the facts set out, it is clear from the allegations of the bill and answer, considered in connection with the evidence, much of which is undisputed, that, while the title to premises in question is one that may be made good, and for defensive purposes may be shown to be good in appellee, it is not shown to be good and merchantable and free from all liens and incumbrances of record, nor by the abstracts furnished, nor in fact. The defects as set out are not such as could be cured by oral testimony. In order to make it a complete chain of title, legal proceedings would be necessary. Appellee insists that, because the abstract shows in regard to some of the parcels of land composing said tract that appellee claims under prescription titles covering more than 20 years, therefore the abstracts show said title to be good and merchantable. This we are unable to concede. Howe v. Coates, 97 Minn. 385, 107 N. W. 397, 4 L. R. A. (N. S.) 1170, 114 Am. St. Rep. 723; Fagan v. Hook, 134 Iowa, 381, 105 N. W. 155, 111 N. W. 981. It can hardly be claimed that there are no conditions under which that would not be the case. It would not be true as against an insane or idiotic person. Appellee himself undertook to cure some of the said defects, but ceased when notified that the title and conditions of the land were such that appellants declined to accept the property, as not complying with the terms of the contract. Undoubtedly a title by prescription is as high as any known to the law, but the facts upon which it is based should be legally established. We do not deem the title as shown to some of the tracts as merchantable or marketable, for the purposes of these proceedings, in the absence of the decree of some competent tribunal declaring the unrecorded and unestablished facts, such as competency of parties barred, open and adverse possession, and the like. Fagan v. Hook, supra; Gerstell v. Shirk, 210 Fed. 223, 225, 127 C. C. A. 41. The property in question being one plant, the rule of law that failure in title to any material part of the land releases appellants from the obligation to take it prevails. Ankeny v. Clark, 148 U. S. 345, 358, 13 Sup. Ct. 617, 37 L. Ed. 475.

[3] The contention of appellee that a good and merchantable title is established when an equitable title is tendered is without merit in the present case. The contract calls for a legal title, not one which could be made such by a lawsuit. An equitable title is not a merchantable title. Maupin on Marketable Titles to Real Estate (2d Ed.) page 731; Sugden on Vendors (14th Am. Ed.) vol. 1, p. 579; Murray v. Ellis, 112 Pa. 485, 3 Atl. 845; Day v. Mountin, 137 Fed. 756, 764, 70 C. C. A. 190. In Abel v. Heathcote, 2 Ves. Jr. 100, it was held that such a title would not sustain an action in ejectment. This is not a proceeding to establish title to the said property, and we are not charged with that task, but only to determine whether the title to said lands, and all of them, was at the date of the contract good

and merchantable, or became such within the periods prescribed or agreed on to that end. We are of the opinion that while, other things being satisfactory, appellants might have been safe in taking said title, yet it was not such a title as would support a suit for specific performance or be deemed a compliance with the terms of the contract on appellee's part.

[4] The far more vital questions, however, are those which pertain to the conditions of the lands involved as to the quality and quantity of the limestone contained therein with reference to the availability of the property for a Portland cement manufacturing plant. The justice of appellants' cause turns mainly upon the sufficiency of the examination made of the conditions there existing. Both parties seem to have entered honestly upon that undertaking, and not until a considerable lapse of time from the date written notice was served of appellants' refusal to take the land and perform the contract did appellee raise the contention that the tests made were inadequate. The parties were working together to ascertain the truth. The work had, under the contract, to be carried on during the winter months, when digging and drilling were difficult. While the contract required drilling, it did not exclude other methods, especially such as interpreted the results of the drilling—examination of outcroppings, digging of trenches, and any other steps which would throw light upon the subject. It is more than conceivable that identification of core materials with those shown in outcroppings, quarry faces, and shallow trenches would be almost indispensable aids in interpreting the significance of the strata revealed by the cores. Appellees' witness Blatchley, state geologist of Indiana, so testified, with others, and the proposition seems to be one of common knowledge, which should have had weight with the court. The proposition that there should have been drilled at least 60 holes does not appeal to reason. To expend $60,000 on drillings alone would make testings in such cases prohibitive. There seems to be plausibility in the corroborating data procured from the different methods used by appellants. Bands of dolomite and beds of limestone are traced in a satisfactory manner. Dolomite or magnesia limestone constitutes a part of the limestone deposit just as truly as pure calcium carbonate or practically pure limestone.

The contract warrants the limestone to contain 90 per cent. of carbonate of lime. This degree of purity is essential for successful operation of a Portland cement manufacturing plant. The evidence shows that a considerable part of the main bed of limestone averaged much less than 90 per cent.—some of it very much lower. It also shows that there was in places dolomite above the limestone 30 feet in thickness, and that the overburden exceeds 8 per cent. of the total height of the stone deposit above the level of the bottom of the present quarry. Appellee suggests that the dolomite is above and not in the limestone. The debased quality of the limestone indicates that the magnesia stone is in as well as over the limestone in many places. His contention that the contract does not refer to magnesia stone upon the limestone bed is not a reasonable construction of the contract. Even were it so, the burden of the material lying above the limestone far

exceeds the limitation fixed by the contract. Appellants sunk their drill holes at an elevation of over 60 feet above the top of the present quarry. If, as appellee contends, the contract refers only to the limestone strata at a depth of over 100 feet from the surface at the place where the drilling was done, not even down to the floor of the present quarry, appellee, who is shown to have been advised of what was being done by appellants, should and probably would not have allowed the drilling to have been made at that altitude. His action was inconsistent with his present position. We are convinced that there is a stone deposit on this land extending in thickness about 110 feet above the bottom of the present quarry and that therein are strata of magnesia limestone of an average aggregate thickness of over 30 feet, and that this stone in the overburden exceeds the proportions prescribed by the contract, and that the properties of the land are not such as the contract guarantees. The evidence as to the claim of appellants that appellee agreed to refund the $25,000 seems fairly well established. All the evidence considered, we are satisfied that appellants have maintained their bill and are entitled to a decree establishing and enforcing their vendee's lien in accordance with the former opinion of this court in Gerstell v. Shirk, 210 Fed. 223, 127 C. C. A. 41, to the amount of $25,000 and expenses as stated, with interest.

For the reasons stated, appellee is not entitled to any relief upon his counterclaim. The decree of the District Court in No. 2216 is reversed, with direction to enter a decree for appellants, and the decree in No. 2260 is affirmed.

STONE-ORDEAN-WELLS CO. v. MARK.

(Circuit Court of Appeals, Eighth Circuit. September 27, 1915.)

No. 150.

(Syllabus by the Court.)

1. BANKRUPTCY ⟹199—AVOIDANCE OF LIENS—INSOLVENCY OF DEBTOR.
   Insolvency of the persons against whom the judgments, attachments, or other liens specified in section 67f (Act July 1, 1898, c. 541, 30 Stat. 564, as amended by Act Feb. 5, 1903, c. 487, § 16, 32 Stat. 800, and Act June 25, 1910, c. 412, § 12, 36 Stat. 842 [Comp. St. 1913, § 9651j), are obtained at the respective times they are secured is indispensable to their avoidance under that section, and to the jurisdiction of the court of bankruptcy to order conveyance or make other orders to that effect thereunder.
   [Ed. Note.—For other cases, see Bankruptcy, Dec. Dig. ⟹199.]
2. BANKRUPTCY ⟹303—LIEN—INSOLVENCY—BURDEN OF PROOF.
   The burden is on him who claims a lien is void under section 67f to plead and prove the insolvency of the person against whom it was obtained at the time it was secured.
   [Ed. Note.—For other cases, see Bankruptcy, Cent. Dig. §§ 458-462; Dec. Dig. ⟹303.]
3. BANKRUPTCY ⟹288—RIGHTS OF EXECUTION CREDITOR—SUMMARY PROCEEDING.
   An execution creditor, whose execution was levied by the sheriff on the right of the defendant to recover a debt of a bank to it eight days before the petition in bankruptcy was filed against such defendant, to whom the sheriff paid the moneys collected under that levy after the filing of the petition, in the absence of any injunction order or process of the court of bankruptcy against him, or the sheriff, making either of them a party or otherwise, and in the absence of any demand or notice by any agent or officer of that court regarding the matter before the money was collected and paid over, has a substantial claim for the money he has thus received, is an adverse claimant thereof, and in the absence of any pleading or proof of the insolvency of the execution debtor at the time of the levy of the execution may not be compelled to pay the money over to the trustee of the bankrupt's estate in a summary proceeding in the court of bankruptcy, but has the right to an opportunity to defend his claim to the money in a plenary suit according to the course of the common law. Reference is made to the opinion in In re Rathman, 183 Fed. 913, 106 C. C. A. 253, for the rules and test for determining what claimants are adverse claimants, entitled to an opportunity to prosecute or defend their claims in plenary suits.
   [Ed. Note.—For other cases, see Bankruptcy, Cent. Dig. § 447; Dec. Dig. ⟹288.]

Petition to Revise Order of the District Court of the United States for the District of Minnesota; Page Morris, Judge.

Petition, to revise final order, by the Stone-Ordean-Wells Company, a corporation, against John H. Mark, trustee of the Wadena Cracker Company, a corporation, bankrupt, in bankruptcy. Decision for petitioner.

On April 24, 1913, Stone-Ordean-Wells Company, a corporation, obtained a judgment for $197.83 against Wadena Cracker Company, another corporation, in one of the district courts of the state of Minnesota; on April 26, 1913,

an execution was issued thereon; and on May 15, 1913, the sheriff levied this execution on a debt owing by the First National Bank of Wadena to the Cracker Company on account of moneys that had theretofore been deposited with it by the Cracker Company. The statutes of Minnesota provide that such a levy may be made by leaving with the debtor to the judgment debtor "a certified copy of the execution with a notice specifying the property levied on" (Gen. St. Minn. 1913, § 7934), and that, when the officer with an execution against the defendant applies to any person mentioned in section 7934 for the purpose of levying upon a debt he owes to the defendant, that person shall furnish the officer with a certificate of the debt owing to the judgment debtor (section 7935). The bank disclosed to the sheriff its indebtedness to the Cracker Company in an amount in excess of the judgment debt and on June 15, 1913, he collected from it by virtue of his levy $211.93, retained $10.70 in payment of his fees and costs and paid over to the Stone Company $201.23. On May 23, 1913, a creditors' petition against the Cracker Company praying its adjudication a bankrupt was filed in the court below; on June 14, 1913, the Cracker Company was adjudged a bankrupt on default; on July 23, 1913, John H. Mark became trustee of its estate, and on the same day he presented to that court a petition for an order on the Stone Company to pay over to him as such trustee the $211.93 the sheriff had collected from the bank. The court issued an order on the Stone Company to show cause why the prayer of the trustee's petition should not be granted. The Stone Company objected to the granting thereof on the ground that the petition failed to present any case wherein the court had jurisdiction to determine in a summary proceeding any issue it tendered. The court below, however, after a hearing, granted the petition and ordered the Stone Company to pay to the trustee $211.93, interest thereon from June 16, 1913, and $15 costs on the hearing. The Stone Company has brought this petition to revise the final order below, on the ground that there was no allegation in the petition for the order, and no proof of the insolvency of the Cracker Company at the time of the levy, and that in the absence of such allegation the bankruptcy court was without jurisdiction to avoid, in a summary proceeding, its levy, and compel its payment of the money it collected by means of the process of the state court to the trustee.

Courtney & Courtney, of Duluth, Minn., for petitioner.

Hugh J. McClearn, of Duluth, Minn., for respondent.

Before SANBORN and CARLAND, Circuit Judges, and LEWIS, District Judge.

SANBORN, Circuit Judge (after stating the facts as above). [1, 2] Section 67f of the bankruptcy act provides:

"That all levies, judgments, attachments, or other liens, obtained through legal proceedings against a person who is insolvent, at any time within four months prior to the filing of a petition in bankruptcy against him, shall be deemed null and void in case he is adjudged a bankrupt, and the property affected by the levy, judgment, attachment, or other lien shall be deemed wholly discharged and released from the same. * * * And the court may order such conveyance as shall be necessary to carry the purposes of this section into effect." Act July 1, 1898, c. 541, § 67f, as amended by Act Feb. 5, 1903, c. 487, § 16, and Act June 25, 1910, c. 412, § 12 (U. S. Comp. Stat. 1913, § 9651, pages 4399, 4401).

Counsel for the trustee cite this section and decisions under which orders made thereunder in summary proceedings avoiding liens obtained against insolvents in legal proceedings within four months of the filing of petitions in bankruptcy against them have been sustained. But the insolvency of the persons against whom the liens mentioned in this section are obtained is indispensable to their avoidance by sum-

mary proceedings thereunder. It is liens obtained through legal proceedings against an insolvent, and those only, that are avoided in case he is adjudged a bankrupt, and it is conveyances necessary to effect an avoidance of such liens, and those only, that the court of bankruptcy is empowered by this section to order. If a creditor by legal proceedings obtains a lien by attachment or by the levy of an execution three months before the filing of a petition in bankruptcy against his debtor, who is then solvent, and who does not become insolvent until the day the petition in bankruptcy is filed against him, that creditor does not obtain his lien "through legal proceedings against a person who is insolvent," but against a person who is solvent "within four months prior to the filing of the petition in bankruptcy against him," and section 67f grants the court of bankruptcy no power to avoid that lien, or to order conveyances to effect that result in summary proceedings. The evident purpose of the Congress in limiting the power of the court summarily to avoid liens of the character mentioned in the section to those against insolvents, and in withholding the power to avoid those against solvents, was to give the power to avoid such as creditors would be likely to know would probably give them a preference over other creditors, and to withhold the power to avoid others.

The natural and pertinent time of that insolvency which conditions the power of the court of bankruptcy to avoid in summary proceedings one of the liens specified in section 67f is the time when the lien is obtained. If the person is then insolvent, the lien is obtained against "a person who is insolvent"; if he is solvent, then the lien is obtained against a person who is solvent. And the terms of the statute, their natural and rational interpretation, the meaning which first occurs to the mind on reading them, and that which after meditation securely abides, compel the conclusion that it was the intention of Congress and the legal effect of section 67f to grant to the courts of bankruptcy the power to effect an avoidance in summary proceedings of liens of the character there specified, obtained against persons who were insolvent at the respective times the liens were obtained, and those only, and that the insolvency of the person at the time the lien is acquired is an indispensable condition of the existence and of the exercise of the power. Keystone Brewing Co. v. Schermer, 241 Pa. 361, 88 Atl. 657, 31 Am. Bank. Rep. 279, 281, 282; Simpson v. Van Etten (C. C.) 6 Am. Bank. Rep. 204, 205, 206, 108 Fed. 199, 201; 1 Loveland on Bankruptcy, 909, 910, § 437; Severin v. Robinson, 27 Ind. App. 55, 60 N. E. 966; Collier on Bankruptcy (10th Ed.) p. 963, par. "e."

[3] The petition of the trustee for the order on the Stone Company to pay over the money it had collected by virtue of the levy of its execution on the chose in action of the Cracker Company eight days before the petition in bankruptcy against the latter was filed contains no allegation of the insolvency of the Cracker Company at the time the Stone Company's lien was obtained by the levy or at any time. It therefore failed to invoke the power of the court of bankruptcy to avoid in summary proceedings the lien of the Stone Company by virtue of section 67f, and that petition and all the subsequent proceedings were challenged, objected to, and protested against by the Stone Company

at the inception of the proceedings against it, on the expressed ground that the petition made no presentation of any grounds for any relief which the court of bankruptcy had the power to grant in a summary proceeding. No amendment of the petition was made or asked, no issue of the insolvency of the Cracker Company was ever tendered, no answer to the petition was made, and as the burden was on the trustee to plead and prove the insolvency of the Cracker Company in order to bring his case under section 67f, the order directing the Stone Company to pay over the money rests on the presumption that the Cracker Company was solvent when the Stone Company obtained its lien and section 67f and the authorities under it have no relevancy to the questions arising in this case. They must accordingly be laid aside, including Clarke v. Larremore, 188 U. S. 486, 23 Sup. Ct. 363, 47 L. Ed. 555, in which counsel for the trustee seems to place much faith, but which rests on an adjudication of bankruptcy in a contested case, on the ground that the lien annulled in that case was acquired while the bankrupt was insolvent and that it constituted the act of bankruptcy. In the case at bar the Stone Company was not a party to the bankruptcy proceedings until the order to show cause why it should not pay over the money it collected was served on it, and in the proceedings prior to the filing of the petition for that order its lien was never mentioned. The result is that this case must be determined as though section 67f had never been enacted.

In Babbitt v. Dutcher, 216 U. S. 102, 113, 30 Sup. Ct. 372, 377 (54 L. Ed. 402, 17 Ann. Cas. 969), the Supreme Court said:

> "There are two classes of cases arising under the act of 1898 and controlled by different principles. The first class is where there is a claim of adverse title to property of the bankrupt, based upon a transfer antedating the bankruptcy. The other class is where there is no claim of adverse title based on any transfer prior to the bankruptcy, but where the property is in the physical possession of a third party or of an agent of the bankrupt, or of an officer of a bankrupt corporation, who refuses to deliver it to the trustee in bankruptcy."

Owners of claims of the first class are adverse claimants and have the right to an opportunity to prosecute or defend their claims in a plenary suit according to the course of the common law or the rules and principles of equity jurisprudence. Owners of claims of the latter class may be required to submit to adjudications of them in summary proceedings by a court of bankruptcy. One who, prior to the filing of a petition in bankruptcy, has acquired a lien upon the property of the party subsequently adjudged bankrupt, is an adverse claimant, and is entitled to all the rights and privileges of such a claimant to the same extent as one who has acquired property from such a party. In re Rathman, 183 Fed. 913, 920, 921, 106 C. C. A. 253, 260, 261; Jaquith v. Rowley, 188 U. S. 620, 621, 625, 626, 23 Sup. Ct. 369, 47 L. Ed. 620; Harris v. First National Bank, 216 U. S. 382, 383, 385, 30 Sup. Ct. 296, 54 L. Ed. 528; In re McMahon, 77 C. C. A. 668, 669, 147 Fed. 684, 685; Frank v. Vollkommer, 205 U. S. 521, 522, 526, 529, 27 Sup. Ct. 596, 51 L. Ed. 911; Carling v. Seymour Lbr. Co., 113 Fed. 483, 484, 485, 490, 51 C. C. A. 1, 2, 3, 8; In re Silberhorn (D. C.) 105 Fed. 899. Nor is such a claimant who does not fall

under the provisions of section 67f deprived of his right to an opportunity to prosecute or defend his claim in a plenary suit by the fact that his lien was acquired within four months of the filing of the petition in bankruptcy. Jones v. Springer, 226 U. S. 148, 155, 33 Sup. Ct. 64, 57 L. Ed. 161; In re Shea (D. C.) 211 Fed. 365, 369; Tripp v. Mitschrich, 211 Fed. 424, 426, 427, 128 C. C. A. 96, 98, 99.

The property which the sheriff lawfully seized by his levy eight days before the petition in bankruptcy was filed was a chose in action. It was the right to recover of the bank $201.23 and the sheriff's fees for collecting this amount. This right was, prior to May 15, 1913, in the Cracker Company. By the levy of the execution that right was transferred to the Stone Company and the sheriff eight days before the petition in bankruptcy was filed, and, laying aside section 67f and the cases arising under it, that right was indefeasible. It was property the transfer of which antedated the filing of the petition. It was property which had passed beyond the possession and control of the bankrupt before the petition was filed, so that it was not then "property which prior to the filing of the petition he could by any means have transferred or which might have been levied upon and sold under judicial process against him." Paragraph 5, § 70a, Bankr. Act of 1898 (Comp. St. 1913, § 9654).

The sheriff was commanded by the execution to collect the judgment debt and pay the money over to the Stone Company, and he obeyed that command. No injunction, or order, or process of the court of bankruptcy, no demand of any officer or agent of that court, no notice of the bankruptcy proceeding, so far as this record discloses, ever came to the Stone Company or the sheriff until after the money had been collected and paid over to the Stone Company. They were strangers to the bankruptcy proceeding, who held a substantial claim of title to or of a lien upon this property, which has subsequently been claimed as that of the bankrupt, when the petition was filed, and, in the absence of possession of this property by the bankrupt, or any party for him, at that time, of any order or process of the court of bankruptcy making them parties to the proceeding therein, of any demand by any officer or agent of that court, and of any notice of the bankruptcy, the filing of the petition was as to them neither a caveat, an injunction, nor the creation of a lien upon this property. The statement on that subject in Mueller v. Nugent, 184 U. S. 1, 14, 22 Sup. Ct. 269, 46 L. Ed. 405, is inapplicable to such claimants. In re Rathman, 183 Fed. 913; 925, 106 C. C. A. 253, 265; Jaquith v. Rowley, 188 U. S. 620, 625, 23 Sup. Ct. 369, 47 L. Ed. 620; York Mfg. Co. v. Cassell, 201 U. S. 344, 352, 353, 26 Sup. Ct. 481, 50 L. Ed. 782; Hiscock v. Varick Bank of New York, 206 U. S. 28, 41, 27 Sup. Ct. 681, 51 L. Ed. 945; Jones v. Springer, 226 U. S. 148, 155, 33 Sup. Ct. 64, 57 L. Ed. 161; Fidelity Trust Co. v. Gaskell, 195 Fed. 865, 872, 115 C. C. A. 527.

In the Rathman Case this court had occasion to examine with some care the authorities upon the question what claimants are adverse claimants, who are entitled to an opportunity to prosecute or defend their claims in a plenary suit, and it endeavored to state the rules

and the test by which that question should be answered. Subsequent decisions which have been cited, and those which have come to our attention, have not persuaded to any modification of the conclusions there reached. It would be futile to repeat the discussion in the opinion in that case. And the result is that when section 67f and the cases arising under it are laid aside, and the rules and test specified in the Rathman Case are applied to the facts of this case, which have been stated, there is no logical or rational way of escape from the conclusion that the Stone Company and the sheriff were adverse claimants, and that they had the right to an opportunity to defend their claim to the moneys they collected in a plenary suit according to the course of the common law.

There was a motion to dismiss the petition to revise the order to pay over the money, on the ground that the Stone Company was a stranger to the bankruptcy proceeding, and that a stranger may not maintain a petition to revise an order made in such a proceeding; but, while the Stone Company was a stranger to the bankruptcy proceeding until the trustee, by the petition he filed and the order to show cause he secured, brought it into the court below, and on that petition and order obtained the order on it to pay over the money it had collected, it was not a stranger to that order, nor to the petition and order to show cause on which it was based, and it had a right to a review of the questions of law they presented by a petition to revise.

Another ground of the motion was that the order of the court on the petition for the order to show cause was in effect a finding that the money was the property of the bankrupt estate. But there was no such express finding, and the petition alleges the levy eight days before the petition was filed, and other facts which present the questions of law which have been considered.

The petition to revise is well founded, and the order that the Stone Company pay over to the trustee the $211.93 and interest and the costs on the hearing below must be set aside and annulled; and it is so ordered.

In re THOMPSON.

FIRST NAT. BANK OF WOODBURY v. WEST.

(Circuit Court of Appeals, Third Circuit. November 29, 1915.)

No. 1964.

1. BANKRUPTCY ⟹328—TIME FOR PROVING CLAIMS—SECURED CREDITOR.
A secured creditor of a bankrupt, who retains his security and makes no claim against the estate during the year allowed for filing claims, will be deemed to have elected to rely on his security, and will not be permitted to file a claim thereafter.

[Ed. Note.—For other cases, see Bankruptcy, Cent. Dig. § 518; Dec. Dig. ⟹328.]

2. BANKRUPTCY ⟹336—PROOF OF CLAIM—AMENDMENT.
A letter written by a creditor of a bankrupt after the filing of the petition, but before adjudication, in answer to one received from the attorneys for the receiver, stating the amount and character of its claims against the bankrupt and describing the security held by it, *held* not to constitute an informal proof of claim against the estate, which could be amended after the lapse of three years.

[Ed. Note.—For other cases, see Bankruptcy, Cent. Dig. §§ 523, 524; Dec. Dig. ⟹336.]

Petition to Revise Order of the District Court of the United States for the District of New Jersey; John Rellstab, Judge.

In the matter of William J. Thompson, bankrupt; Henry J. West, trustee. Petition by the First National Bank of Woodbury to revise an order denying its petition for leave to file a claim. Affirmed.

For opinion below, see 222 Fed. 167.

A. H. Swackhamer, of Woodbury, N. J., for petitioner.

Bleakly & Stockwell, of Camden, N. J., for respondent.

Before BUFFINGTON, McPHERSON, and WOOLLEY, Circuit Judges.

McPHERSON, Circuit Judge. The question for decision is presented by the following facts:

An involuntary petition was filed against William J. Thompson on April 28, 1911, and on May 8 he was adjudged bankrupt. He was then in debt to the First National Bank of Woodbury, his debt including a note for $10,000, dated February 27, 1911, due June 27, which was secured by the pledge of certain securities. The pledge being within four months was apparently a preference, but the trustee did not attack it and allowed the bank to realize afterward on the collateral. The bank was scheduled among the creditors, and from time to time during the next three years received the notices to which it was entitled under the act. Act July 1, 1898, c. 541, 30 Stat. 544. The latest of these was dated in February, 1914, and announced the declaration of a dividend payable on demand to the creditors entitled thereto. The bank had not surrendered its securities under section 57 (g), and their value had not been determined under clause (h) of the same section (Comp. St. 1913, § 9641); but they had produced

$2,000 in one way or another more than a year after the adjudication. No proof of claim had been filed, but as $8,000 was still unpaid the bank petitioned the referee soon after hearing of the dividend, setting forth the debt and the balance still due, and averring that early in May, 1911, it had placed the claim in the hands of its attorney, and had directed him to prepare and file a proof and to take such other action as might be necessary. The petition averred also that the attorney had prepared and filed the proof, but that, owing to his death in September, 1911, no papers relating to the claim could be found after a thorough search. The referee was therefore asked to permit the bank "to re-establish its claim * * * and to share in the distribution of [the bankrupt's] estate." Evidence was taken, and the result is summarized in the following paragraph from the referee's opinion:

"At the hearing held to consider the petition the testimony adduced was considerably at variance with the facts set out in the petition. The petition stated that the cashier of the bank had made proof of claim upon a note given by the bankrupt to said bank and that the said claim was properly verified and filed with the referee, or with the trustee, and, further, that the cashier of the bank was present at the first meeting of the creditors and participated in the deliberations of the meeting. At the hearing the cashier testified that he had no recollection of having made any such proof of claim, and that he was not present at the first meeting of creditors and that he did not participate in the election of the trustee. This feature of the petition was accordingly abandoned. It was stated in the petition, and proven at the hearing, that the bank had received numerous notices of meetings of creditors, etc. Of course, as the bank was a scheduled creditor, there is no doubt but what there was mailed to it a copy of every notice which was sent to the creditors, as required by the terms of the Bankruptcy Act. There was no pretense at the hearing that any proof of claim was ever filed with the referee, and, in order to have this matter perfectly clear on the record, both sides agreed that the referee should make such a statement."

Having failed to establish its original position, the bank made what the referee properly refers to as a "complete change of base so far as the bank's claim under the petition was concerned." His opinion goes on to say:

"It developed that the bank received, under date of April 27, 1911, a letter from Bleakly & Stockwell, who therein stated that they were acting on behalf of Henry J. West, receiver in bankruptcy, and requested that the bank advise them at once as to the amount of the indebtedness of Mr. Thompson to the bank, and also the amount and character of the collateral held as security by the bank, etc. Under date of May 2, 1911, the cashier of the First National Bank of Woodbury replied to the letter of Bleakly & Stockwell of April 27, with the following letter:

" 'Woodbury, N. J., May 2, 1911.

" 'Bleakly & Stockwell, Attorneys for Henry J. West, Receiver in Bankruptcy, William J. Thompson—Dear Sirs: Your favor of April 27th has been received, and the contents carefully noted. We beg to report the indebtedness of William J. Thompson of Gloucester City, N. J., to this bank as follows:

" '$3,500. Note of Henry M. Harley, indorsed by William J. Thompson, due and protested on April 27th, 1911. Also holding note of H. M. Harley, deceased, for $4,500 that fell due on October 27th, 1910, with this. Note of William J. Thompson for $10,000, due June 27th, 1911, with 200 shares of the capital stock of the Gloucester Perry Company and $2,000 of bonds of Fries-Harley Co.

" 'Yours very truly, J. F. Graham, Cashier.'

"It is now claimed on behalf of the bank that this letter must be accepted as a proof of claim, and that the bank must be accorded the privilege of amending the same to have it meet with the requirements of the Bankruptcy Law. On the other hand, the trustee claims that the provisions of section 57n of the Bankruptcy Act of 1898 have long since run against the claim of this bank, and that the petitioner is barred from proving its claim because more than one year has expired since the adjudication of Thompson as a bankrupt."

The trustee's objection was overruled, and the referee ordered that the bank "have leave to amend its said petition by filing the amendment hereto annexed, and further that the said petitioner have leave to amend its proof of claim to conform to the formal requirements of the Bankruptcy Act and general orders as aforesaid." This order was made on the theory that the bank's letter of May 2 was an informal claim made within the statutory period, which could therefore be amended after the year had expired. The District Court was of a different opinion (222 Fed. 167), and the dispute has been brought here by the pending petition.

[1, 2] The bank's letter of May 2 was written after the involuntary proceeding had been begun, but before the adjudication and while Thompson's property was in the hands of a temporary receiver. The letter was a reply to the following request for information from the attorneys for the receiver:

"April 27, 1911.

"First National Bank, Woodbury, N. J.—Gentlemen: In re William J. Thompson, Bankrupt.

"On behalf of Henry J. West, receiver in bankruptcy, we would request that you advise us at once as to the amount of the indebtedness of Mr. Thompson to your bank, and also the amount and character of the collateral which you hold as security with each note held by you. Kindly also state when each note falls due. It is necessary for us to make a report at once to the court as to the condition of his assets.

"Kindly also advise us as to the amount of his cash balance, if any, in your bank to the credit of his account.

"Very truly yours, Bleakly & Stockwell."

Much liberality has been shown by the courts in permitting imperfect claims and proofs of claim to be put into proper form after the statutory period has expired, but we are advised of no decision that runs counter to the positive language of the act and permits a claim that is wholly new to be presented after the limitation has run. In some form the substance of a claim must have been made within the proper time, but if this has been done amendments may be made afterward. Whether formal or informal, a claim must show (as the word itself implies) that a demand is made against the estate, and must show the creditor's intention to hold the estate liable. And this is especially the duty of a secured creditor, who has the choice (if his security be not also a preference) of relying upon the security and thereby giving up all or a part of his claim upon the estate. This he will be sure to do, if the security be sufficient to pay the whole debt; and, even if it will only pay the debt in part, he will probably apply the security as far as possible and hold the estate for the remainder only. But his election to pursue the estate must be made in accordance with the act; otherwise, he will be confined to his security.

In our opinion, the bank did not decide to make a claim on the

bankrupt estate until after February, 1914. Apparently it had been preferred, and if this were true it could not claim without surrendering the preference. At all events, it held on to its collateral, whose par value was larger than the whole debt (we do not know its actual value), and did not attempt to realize on the stock and bonds until more than a year had gone by. And it never made a claim against the estate in any form until nearly three years had passed. The letter of May 2 was a mere statement that the bank was a creditor of W. J. Thompson; no claim could then have been made against his bankrupt estate, for the estate had not yet come into being. At that time there was no adjudication, and none might ever be entered. The District Court had taken temporary custody of the property, and was seeking information that might help it to protect the interest of the creditors; but as yet there was no bankrupt, no estate, and no trustee, and the time for the proof of claims had not yet arrived. Apparently the bank was secured by its collateral, certainly it was secured at least in part, and (so far as appears) it did not then intend to relinquish its advantage in favor of the general estate. We do not think it necessary to prolong the discussion. In the cases cited for the bank—Re Roeber (C. C. A. 2d Cir.) 127 Fed. 122, 62 C. C. A. 122; Bennett v. American, etc., Co. (C. C. A. 6th Cir.) 159 Fed. 624, 86 C. C. A. 614; Re Kessler (C. C. A. 2d Cir.) 184 Fed. 51, 107 C. C. A. 13; Re Brewing Co. (C. C. A. 2d Cir.) 193 Fed. 989, 113 C. C. A. 626; Re Fairlamb (D. C.) 199 Fed. 278; Re McCarthy, etc., Co. (D. C.) 205 Fed. 986; Re Hamilton, etc., Co. (C. C. A. 6th Cir.) 209 Fed. 596, 126 C. C. A. 418—the creditor showed a plain intent to hold the debtor's estate liable, and this we think is the essence of the matter. Such an intent does not appear in the present case.

The order is affirmed.

WHEAT v. HILL et al.

(Circuit Court of Appeals, Fifth Circuit. December 3, 1915. Rehearing Denied January 4, 1916.)

No. 2799.

1. WILLS ⚷436—CONSTRUCTION—DESIGNATION OF LEGATEES—WORDS OF RELATIONSHIP.

By item second of a will the testator made a bequest "to each of my relatives and kindred by blood of the first and second degree," and by item third made a different bequest to an uncle, "he to receive nothing under item second hereof." By the civil law there was but one person, a half-sister, who came within the terms of item second, and under the laws of the state, in case of intestacy, she would have inherited the entire estate, while, on the other hand, there were a number of persons, including the uncle mentioned, who were blood relatives of the first and second degrees by the canonical law. *Held*, that the testator evidently had in mind the latter law, and intended that it should govern in ascertaining the legatees.

[Ed. Note.—For other cases, see Wills, Cent. Dig. §§ 947-950; Dec. Dig. ⚷436.]

⚷For other cases see same topic & KEY-NUMBER in all Key-Numbered Digests & Indexes

2. WILLS ⟹440—CONSTRUCTION—GENERAL RULES.
The cardinal principle in the construction of wills is to ascertain the intention of the testator from the language of the entire instrument.
[Ed. Note.—For other cases, see Wills, Cent. Dig. § 956; Dec. Dig. ⟹ 440.]

Appeal from the District Court of the United States for the Northern District of Texas; Edward R. Meek, Judge.

Suit in equity by Louis C. Hill and others against Ira L. Wheat, administrator of the estate of Edwin R. Jackson, deceased. Decree for complainants, and defendant appeals. Affirmed.

H. E. Jackson, of San Angelo, Tex., and James Cornell and L. J. Wardlaw, both of Sonora, Tex., for appellant.

Rhodes S. Baker, of Dallas, Tex., for appellees.

Before PARDEE and WALKER, Circuit Judges, and SPEER, District Judge.

PER CURIAM. The assignments of error complain of the construction and interpretation of the last will and testament of Edwin R. Jackson, as given by the District Court in the final decree appealed from, in that it is adjudged that the complainants below, appellees here, Louis C. Hill and Hannah Bricker, are relatives and kindred by blood of the first degree of relationship to the testator, Edwin R. Jackson, within the meaning of item second of the said will, and that the complainants Virl Hill and Orpha Hill are relatives and kindred by blood in the second degree of relationship, within the meaning of item third of the said will, and that each of the complainants is entitled, under the will of said Edwin R. Jackson, to the sum of $5,000, to be paid in due course of administration, etc., and, further, that the last paragraph of said decree is erroneous in giving specific directions as to the disposition of the estate of said Edwin R. Jackson, then being administered in the probate court of Sutton county.

[1] The will of the said Edwin R. Jackson provides among other things as follows:

"Item Second. I hereby will, bequeath and devise to each of my relatives and kindred, by blood of the first and second degree, the sum of five thousand dollars ($5,000.00) in cash.

"Item Third. I hereby will, bequeath and devise to my uncle, Charles A. Hill of Nebraska, the sum of five hundred ($500.00) dollars in cash, he to receive nothing under item second hereof.

"Item Fourth. To each of my remaining relatives and kindred by blood, not herein otherwise provided for, who would, under the laws of descent and distribution in Texas, be entitled, in the absence of a will, to any participation in my estate, I hereby will, bequeath and devise the sum of five hundred ($500.00) dollars in cash."

And there are no other provisions in the will which relate in any way to the proper construction of item second. The agreed statement of facts shows that Louis C. Hill and Hannah Bricker were and are respectively brother and sister of the mother of Edwin R. Jackson, and that the plaintiffs Virl Hill and Orpha Hill were and are the

children of the complainant Louis C. Hill, and grandchildren of the maternal grandparents of Edwin R. Jackson.

[2] The main question for our consideration in this case is in regard to the interpretation of the will of Edwin R. Jackson. "The testator's meaning is the great criterion, so far as mere interpretation is concerned. What he intended the courts strain to discover." See Schouler on Wills (5th Ed.) § 462 et seq. And this is the settled law generally in this country. The rule in Texas, declared by the Supreme Court of Texas, is thus given in Cleveland v. Cleveland, 89 Tex. 445, 35 S. W. 145:

"The intention of the testator, as shown by the language used in the instrument, must govern, even if it result in what we might consider unjust or absurd consequences. This intention must be ascertained by considering the entire instrument, and the language of a single clause of it will not govern what is the evident intention in the use of that language when read in connection with the other provisions. Lake v. Copeland, 82 Tex. 464 [17 S. W. 786]; McMurry v. Stanley, 69 Tex. 227 [6 S. W. 412]; Peet v. Railway, 70 Tex. 526 [8 S. W. 203]; Faulk v. Dashiell, 62 Tex. 642 [50 Am. Rep. 542]; Vardeman v. Lawson, 17 Tex. 18."

That the testator included his uncles as devisees within the meaning and intent of item second seems to be very clear indeed by item third, wherein is the devise:

"To my uncle Charles A. Hill of Nebraska the sum of five hundred ($500.00) dollars in cash, he to receive nothing under item second hereof."

There is nothing elsewhere to be found in the will to offset this view. From this it follows, so far as the degree of relatives and kindred is concerned, the testator, if he knew anything at all about such matters, had in view the degrees according to the canonical law under which uncles are related in the first degree and cousins are related within the second degree. A resort to the civil law would not only cut out the uncles, but, so far as the facts in this case are concerned, leave him no relatives whatever embraced within the said first and second degrees, except a half-sister, who would have been his heir under the laws of descent and distribution of Texas, provided he had died intestate.

We have carefully considered and fully appreciate the very able briefs that have been filed on both sides, which seek to determine whether the canon law is a part of the common law prevailing in Texas, or whether in matters of descent and distribution the civil law would be the controlling law; but we conclude from the clear intent of the testator, derived from the will itself, it is unnecessary for us to go further than to find, as we do, in regard to the construction and interpretation of the will, that the judge of the lower court correctly decided.

As to the last paragraph of the decree complained of, we find nothing which, properly and understandingly construed, interferes with the jurisdiction of the probate court of Sutton county, Tex., in the administration of the Jackson estate, further than to make sure and certain that the rights of appellees, as devisees under the will of Edwin R. Jackson, shall be recognized and satisfied.

The decree appealed from is affirmed.

WAYNE MFG. CO. et al. v. COFFIELD MOTOR WASHER CO.*

(Circuit Court of Appeals, Eighth Circuit. October 28, 1915.)

No. 4445.

1. PATENTS ⟹157—CONSTRUCTION AND SCOPE.
A patentee is entitled to all that his patent fairly covers, even though its complete capacity was not recited in the specification, and was even unknown to the inventor prior to the issuance of the patent.
[For other cases, see Patents, Cent. Dig. §§ 229-232; Dec. Dig. ⟹157.]

2. PATENTS ⟹112—VALIDITY—OATH TO APPLICATION.
A recital in a patent that the required oath was made by the applicant, in the absence of fraud, is conclusive of that fact in a suit against an infringer.
[Ed. Note.—For other cases, see Patents, Cent. Dig. §§ 162-165; Dec. Dig. ⟹112.]

3. PATENTS ⟹112—VALIDITY—PRESUMPTION FROM ISSUANCE.
A patent issued in due form is evidence that all formal prerequisites to its issuance have been complied with, and the finding of the commissioner thereon cannot be collaterally attacked in an infringement suit.
[Ed. Note.—For other cases, see Patents, Cent. Dig. §§ 162-165; Dec. Dig. ⟹112.]

4. PATENTS ⟹113—REISSUES—REVIEW BY COURTS.
The courts cannot review the decision of the Patent Office as to the sufficiency of the showing of inadvertence, accident, or mistake to authorize a reissue, unless the matter is manifest from the record.
[Ed. Note.—For other cases, see Patents, Cent. Dig. §§ 155-161; Dec. Dig. ⟹113.
Grounds for reissue of patent, see note to General Electric Co. v. Richmond St. & I. Ry. Co., 102 C. C. A. 145.]

5. PATENTS ⟹328—VALIDITY AND INFRINGEMENT—WATER MOTOR.
The Coffield reissue patent, No. 12,719 (original No. 807,779), for a water motor for operating washing machines, was applied for within a reasonable time, discloses and covers an invention within the original specification, which was not anticipated, and discloses patentable novelty and invention. Defendant *held* not to have acquired intervening rights prior to the application for reissue, and to have infringed.

Appeal from the District Court of the United States for the Eastern District of Missouri; David P. Dyer, Judge.

Suit in equity by the Coffield Motor Washer Company against the Wayne Manufacturing Company and the American Washer Company. Decree for complainant, and defendants appeal. Affirmed.

See, also, 209 Fed. 614, 126 C. C. A. 608.

L. C. Kingsland, of St. Louis, Mo. (John D. Rippey, of St. Louis, Mo., on the brief), for appellants.

Richard J. McCarty, of Dayton, Ohio (Homer Hall, of St. Louis, Mo., on the brief), for appellee.

Before HOOK, Circuit Judge, and YOUMANS and ELLIOTT, District Judges.

ELLIOTT, District Judge. This is an appeal by the appellants, hereinafter referred to as the defendants, from a decree in favor of

⟹For other cases see same topic & KEY-NUMBER in all Key-Numbered Digests & Indexes

*Rehearing denied February 12, 1916.

the appellee, complainant below and hereinafter referred to as complainant, perpetually enjoining the defendants, their agents, etc., from making or selling or in any way disposing of water motors embracing or containing the inventions or improvements described in the claims of complainant's reissued patent, No. 12,719, for a water motor, with a provision in the decree appointing a master for the purpose of an accounting.

Complainant's patent was sustained in extended litigation in the Fourth Circuit. P. T. Coffield & Son v. Spears & Riddle et al. (C. C.) 169 Fed. 641; Coffield Motor Washer Co. v. A. D. Howe Co. (C. C.) 172 Fed. 668; A. D. Howe Machine Co. v. Coffield Motor Washer Co., 197 Fed. 541, 117 C. C. A. 37. An appeal from an order granting a preliminary injunction restraining these defendants in this action from infringing said patent was by this court determined adversely to the defendants, and the order granting such preliminary injunction was affirmed. 209 Fed. 614, 126 C. C. A. 608.

The intent, purpose, and a complete history of complainant's said patent, with drawings and specifications, are fully set forth in the foregoing citations. The different angles from which this patent has been attacked appear fully therefrom, and numerous alleged prior art patents, covering many forms of power generators, are referred to and described in these cases, and it appears that all of them, seriously urged by defendants here, were, with one exception, known to the defendants in these different suits, and were brought to the attention of the different courts in which the litigation has been pursued, and to the court below and this court upon the former hearing. Reference is made to the report of these cases, for all of these matters, for the purpose of saving repetition. The one exception referred to is the Bryan patent, No. 346,190, dated July 27, 1886, for a valve gear for steam pumps. This last patent, not having been described in the foregoing decisions, special reference will be hereafter made to it.

The allegations of complainant's bill, filed in the court below, fully set forth all of the rights claimed by the complainant, under and by virtue of his said patent, including proper drawings and specifications, fully covering the patent, its purpose, its uses, the method of its use, as set forth in detail in the cases above cited, together with proper allegations of infringement by the defendants. The defendants answered with sufficient denials, and setting out the usual defenses of lack of patentability; lack of infringement; that the patentee was not the original inventor of said improvements; that, after having filed the original application for letters patent, the specifications were changed, and the patent was unlawfully issued, with changed and altered specifications, embracing new matter; that the invention and all of its substantial parts had been previously described and illustrated in letters patent, giving a list of them; that the reissued patent was issued without legal authority, for reasons therein stated; alleging noninfringement of the patent in suit; alleging intervening rights, and that the public generally, and appellants specifically, acquired, during the interim between the issue of the original patent and the reissue thereof, vested rights; that the bill of complaint is without equity; and by stip-

ulation the answer was amended, asserting the claims of the defendants with reference to patent No. 346,190, dated July 27, 1886, granted to L. W. Bryan. Proper replication was filed by complainants.

The assignment of errors is in substance, and to the effect, that the decree of the court below is erroneous, in that it should have dismissed complainant's bill for want of equity, contending: (1) That the court should have held that the claims of complainant's patent herein are invalid: (a) Because the claims are destitute of patentable novelty; (b) because the reissued patent was granted without legal authority; (c) because as to these defendants the claims are inoperative, because defendants, during the interim between the granting of the original patent and the reissued patent, acquired vested intervening rights to manufacture and sell the motors alleged to infringe, and particularly motors having coil springs fastened on the cylinder heads. (2) That the court should have found no infringement.

Considering complainant's patent as minutely described and fully discussed in the above citations, we proceed to consider defendants' first contention—that there was no patentable novelty. An examination of the record discloses that the Board of Appeals in the Patent Office concluded that Coffield, the patentee of complainant's patent, was the first to use, in connection with the elements of the mechanism, springs which complete the stroke of the valve, and that, taken as a whole, the device was new, useful, and patentable. The record discloses the fact that the original application of patentee was denied in the Patent Office, and that his patent was secured only after an appeal had been taken to the board; that thereafter his application for a reissue was denied in the Patent Office, and the Board of Appeals, whose membership differed from that of the first Board that considered the original patent, again considered his invention, and upon the last consideration it considered the prior art patents relied upon by those who were contesting patentee's right to the reissue, which are pointed out in its report and made a part of the record, with the distinguishing features of Coffield's device. The reissued patent was therefore an expression of the deliberate judgment of the Board of Appeals.

From the record it seems undisputed that the reissued patent of the complainant comprises a reciprocating water motor, with special features which adapt it for operating washing machines in domestic use. It appears that it is successful because of its simplicity and efficiency, and because it does not require the services of a skilled person to keep it in running order. The record shows this motor durable in construction, certain in action, and free from trouble. It further clearly appears that water ordinarily taken from the municipal waterworks system varies in pressure, and this motor, without any change in its construction, acts with equal efficiency under pressures of wide differences. This is accomplished by protecting the springs from the work of unseating the valves, the life of the springs is prolonged, and troubles due to breaking the springs are largely reduced. The work of unseating the valves is performed by means other than the springs, the valve stems striking the cylinder heads. These valve stems, being

rigid bodies, work equally well under all conditions of high or low pressure, and are made amply strong to resist indefinitely the different forces to which they may be subjected. This, in substance, appears as the claim of the inventor, from the description of the motor and its mode of operation. The record discloses that this device possesses such change from the prior art as to receive the approval of the Board of Appeals, and it is entitled to the presumption of invention, which attaches to a patent.

[1] Complainant is entitled to all that its patent fairly covers, even though its complete capacity was not recited in the specifications, and was even unknown to the inventor prior to the patent issuing. The law regards a change as a novelty and the acceptance and utility of the change is further evidence, as a demonstration, of novelty. Diamond Rubber Co. of New York v. Consolidated Rubber Tire Co., 220 U. S. 428, 31 Sup. Ct. 444, 55 L. Ed. 527. This record is replete with evidence of the acceptance and utility of this device, as well as prolonged litigation over it, tending to show and measure the existence of public demand for its use. We have no difficulty in determining from the evidence in the case that complainant's device is and was an advance in the art, that the patent represents a type of water motor that can be made to work successfully if the valve stems and the springs are so arranged that the former will do the heavy work of unseating; the latter impart the final movement and complete the work of reseating. In this field Coffield was a pioneer and the claims of his patent are patentable.

Considering defendant's contention, *that the reissued patent was issued without legal authority,* they first assert that the original patent was void on the ground that the claim in the original patent was predicated on new matter injected into the specifications by the amendment of May 1, 1905, which new matter was unsupported by any oath, and it is further contended that the original patent being void, the reissue thereof is void also. It is claimed by the defendants that the amended application and model filed by Coffield, embodied material additional to, or at variance from, the original. We find as a matter of fact that nothing new was comprised therein. There was no departure by this amendment from the invention as originally disclosed in the application filed. The facts apparent from the face of the Patent Office record of the original patent disclose no irregularity that renders the original patent void, and therefore the reissued patent cannot for that reason be determined invalid.

[2] They next assert that the oath accompanying the reissued patent in suit is not a legal or valid oath, because it was administered by the solicitor who prosecuted the application. In the case at bar the recital in the patent that the required oath was made by the applicant is, in the absence of fraud, conclusive evidence of that fact. The presence in the files of the Patent Office of a paper purporting to be an oath in a given case, even if void for lack of a jurat, or other fault, is harmless. In such case the law presumes the oath recited in the letters patent was made orally, or was embodied in some other paper. It is presumed that the Commissioner will never issue a patent till he is

satisfied that the applicant has somehow made oath to the facts to which the statute requires him to swear. When the Commissioner is so satisfied and recites the fact in the letters patent, all inquiry on the subject is foreclosed, except in case of actual fraud. Walker on Patents, § 122; Empire Cream Separator Co. et al. v. Sears, Roebuck & Co. (C. C.) 157 Fed. 238. This patent recites that the required oath was taken, and this, in the absence of fraud, is conclusive, in a suit against an infringer. Seymour v. Osborne, 11 Wall. 516, 20 L. Ed. 33.

[3]. There is neither allegation nor proof of fraud in this record. It is undisputed that the Commissioner of Patents accepted a surrender of the original patent in this case and granted the reissued patent. His decision in the premises in this suit for infringement is final and conclusive, and is not re-examinable in this suit; it not appearing upon the face of the patent that he exceeded his authority, and it further affirmatively appearing that there is no repugnancy between the old and the new patent, it affirmatively appearing that the new patent is for the same invention as that embraced and secured in the original patent. Seymour v. Osborne, 11 Wall. 516, 20 L. Ed. 33; Battin v. Taggart, 17 How. 74, 15 L. Ed. 37; Railroad Co. v. Stimpson, 14 Pet. 458, 10 L. Ed. 535; Stimpson v. Railroad, 4 How. 380, 11 L. Ed. 1020; Rubber Co. v. Goodyear, 9 Wall. 797, 798, 19 L. Ed. 566. This court can only examine and pass upon what appears upon the face of the patent, and say whether there is anything to indicate its invalidity or render it void upon its face. All questions of fact behind the patent are to be examined, heard, and determined by the Commissioner of Patents. Giant Powder Co. v. Safety Nitro Powder Co. (C. C.) 19 Fed. 509. Mr. Justice Miller said, in Re Mahn v. Harwood, 112 U. S. 354, 5 Sup. Ct. 174, 6 Sup. Ct. 451, 28 L. Ed. 665:

> "The doctrine is well established that a grant by the government, within its lawful authority, evidenced by a patent under its seal and the signature of the Executive, cannot be impeached collaterally. It must be recognized as valid in all courts, when it is introduced as evidence of the right which it confers, and can only be avoided by a direct proceeding by way of scire facias, or bill in chancery to set aside the grant for some of the reasons which made its original issue a wrongful act."

See United States v. Stone, 2 Wall. 525, 17 L. Ed. 765; United States v. Throckmorton, 98 U. S. 61–70, 25 L. Ed. 93; Mowry v. Whitney, 14 Wall. 434, 20 L. Ed. 858.

We are therefore of the opinion that this patent, having been issued under the seal of the United States, properly signed and countersigned, a presumption of law attaches that these public officers performed their proper official duties, and where, as in this case, a patent was granted upon evidence and proofs laid before the proper officer, upon which he decided, the fact that he has acted and granted the patent is prima facie evidence that the proofs have been regularly made and were satisfactory. It is clear that no other tribunal is at liberty to re-examine collaterally into the sufficiency of such proofs as laid before him, when the law made such officer the proper judge of their sufficiency and competency. Railroad v. Stimpson, 14 Pet.

458, 10 L. Ed. 535. We therefore find that the reissued patent was issued with authority of law, and is not void for this reason urged by the defendants.

Defendants next assert the invalidity of the reissued patent, claiming that it is not for the same invention as that originally disclosed. The validity of the reissue in suit was upheld in Peter T. Coffield & Son v. Spears & Riddle (C. C.) 169 Fed. 641, and, upon appeal, in Neff v. Coffield Motor Washer Co., 210 Fed. 166, 127 C. C. A. 24; also in Coffield Motor Washer Co. v. A. D. Howe Co. (C. C.) 172 Fed. 668, and, upon appeal, in 197 Fed. 541, 117 C. C. A. 37. The Supreme Court of the United States denied a petition for a writ of certiorari in the case last mentioned. 227 U. S. 677, 33 Sup. Ct. 405, 57 L. Ed. 700.

In view of the discussion as to the validity of this reissue in the foregoing cases, it would serve no good purpose to discuss the details and specifications upon which the reissue was predicated. Suffice it to say that we have no trouble in determining that the specification as originally drawn was defective and insufficient, and that the claims were narrower than Coffield's actual invention. We also find that these errors arose from inadvertence and mistake, and the patentee was guilty of no fraud or deception. It appears from the record that the reissue is for the same invention as the original patent, as the invention appears from the specifications and drawings, and constituted an enlargement of his claims, so as to make it extend to the limits of his invention. There is nothing in the record that tends to show that there was an attempt to make it extend beyond such limits. This reissue is within the rules laid down in Topliff v. Topliff, 145 U. S. 156, 12 Sup. Ct. 825, 36 L. Ed. 658, and this contention of the defendants must be denied.

[4] The defendants further urge insufficient showing as to inadvertence, accident, or mistake. We cannot review the decision of the Commissioner upon the question of inadvertence, accident, or mistake, unless the matter is manifest from the record. Topliff v. Topliff, supra, 145 U. S. 171, 12 Sup. Ct. 825, 36 L. Ed. 658. We find no facts upon the face of this record justifying this exception of the defendants, and the same must be overruled.

[5] The defendants urge that the application for a reissue was not made within a reasonable time. The matter of the reasonableness of the time within which the reissue was applied for is a matter of law for the court, upon the facts appearing of record, taking into consideration the history of the patent, and the circumstances attending the delay. Coffield received the original patent December 12, 1905, and July 28, 1906, the owners of the original patent surrendered it and applied for a reissue. We are of the opinion that due diligence was exercised in discovering the mistake in the original patent, and that the lapse of less than eight months, under the circumstances of this case, should not be held unreasonable, and was not an abandonment of the new matter claimed in the reissue, and this contention of the defendants is denied.

Defendants urge noninfringement of the patent in suit. An illustration of the interior construction of defendants' motors A and B, which it was alleged by complainant were infringements, appears in this record as complainant's exhibit. An expert witness upon the witness stand states that a hydraulic engineer and expert in this class of machinery carefully analyzed the two claims of the patent, and reads them element for element on defendants' structure. A comparison of the claims of the patent, with the illustrations of defendants' motors, shows the following comparison:

Claim I.

(a) In a water motor.

(b) A cylinder. (This element is present in defendants' motors.)

(c) A piston divided into two noncommunicating chambers. (This element is present in defendants' motors.)

(d) Hollow rods communicating with said chambers. (These elements are present in defendants' motors.)

(e) Double puppet inlet valves and double puppet exhaust valve, mounted in said piston. (These are present in defendants' motors.)

(f) Springs adapted to impart to said valves their final movement, after being unseated, thereby reversing the travel of the piston. (These are present in defendants' motors.)

An examination of the drawing of defendants' motors introduced in evidence shows the exhaust valve in engagement with the stems. In moving to this position the springs have been compressed until said valves engaged the stems. The engagement between the valves and stems causes the initial movement of said valves from their seats. The force of the water which was then holding the valves on their seats becomes balanced or equalized on both sides of the piston, and the expanding action of the springs throws the valves to their opposite seats, and thus completes the movement of the valves, and enables the pressure of the water on one side of the piston to exceed that on the other, and to thus move the piston back and forth within the cylinder.

The foregoing description is a fair statement of the action of the motors of the defendants which are alleged to infringe the patent of this complainant. If this be true, it would seem that they come within the terms of claim I of the patent, without invoking the doctrine of equivalents. The foregoing description is the precise action of the motor of the patent in suit, as appears from the specifications of the reissued patent.

An examination of defendants' motors further reveals the fact that substantially the same make of springs are used as those designated in complainant's patent, and substantially the same valve stems are employed. Defendants seem to have undertaken to avoid this claim by severing the stems from the valves and fixing them upon the cylinder heads, and, instead of supporting the springs upon the stems, they are supported upon the cylinder heads. An examination of the action of the defendants' motors shows that, when the stems and springs come into action to perform their functions, the stems are engaged

by the ends of the valves, and perform the same function as if they were at that time a part of the valves. A further examination discloses that the springs are placed in alignment with the valves, so that they may be compressed by the ends of the valves up to the point where said valves engage the stems.

It will therefore be seen that if the valve stems of defendants' motors were removed from the cylinder heads, and rigidly united to the ends of the valves, and the springs were reversed, and the small end of said springs made to surround and engage the said stems, the action of the defendants' motors would not be changed. These parts would serve the same purpose in the same way. This is, without the least variation, the identical action of the stems and springs of the complainant's motor.

It is interesting also to note a comparison with complainant's

Claim II.

(a) In a water motor.

(b) A cylinder. (This element is present in defendants' motors.)

(c) A cylinder having inclosed heads. (The inclosed heads are present in defendants' motors.)

(d) A piston divided into two noncommunicating chambers. (Present in defendants' motors.)

(e) Hollow piston rods communicating with said chamber. (These elements are present in defendants' motors.)

(f) Balance exhaust valve lying on the outside of one of said chambers and seating against the outer sides of said piston. (These elements are present in defendants' motors.)

(g) Said exhaust valves being connected to a common stem and having extensions beyond the valves. (The stem which connects said exhaust valves is present in defendants' motors. The extensions beyond the valves are the stems which are present in defendants' motors and perform the same functions.)

(h) Balance inlet valve located within the other chamber. (Present in defendants' motors.)

(i) Said inlet valves having stems projected on each side beyond the piston. (Present in defendants' motors.)

(j) Coil springs carried upon the stems of said exhaust and inlet valves, and adapted to impart the final movement to said valves after said valves have been given their final movement by contact of their stems with the cylinder heads. (This element is present in defendants' motors, except that they are severed from the valves but when they are performing that function they are engaged by the valves and during the performance of said functions the engagement thereof with the valve continues, and they are in effect the same as if they were integral projections extending from the ends of the valves like the motors of the patent in suit.)

An examination of the evidence discloses that in the case of both the motor in the patent in suit and defendants' motors, when the piston is moving away from one or the other of the cylinder heads, which takes place after the valves are completely reversed, the stems and the

springs have performed their functions, and it makes no difference whether said stems and springs are carried with the valves and piston, as in the complainant's patent, or whether they are supported upon the cylinder heads as in defendants' motors. In both cases they are in position to perform the identical functions when the piston returns in the direction of one or the other of the cylinder heads.

We therefore find, by a comparison of defendants' motors with the motor in suit, that they obtain the same results as complainant's motor, that they employ the same means of obtaining such results, and that the different mechanisms of defendants' motors operate and cooperate in an identical manner with those of complainant's motor to produce the same result. There is no substantial difference in any of these particulars. And, again, the stem and spring in defendants' motors is an obvious mechanical equivalent of the same parts of complainant's motor. Clearly, therefore, there is an infringement.

Some emphasis is laid by the defendants upon what is known as the Bryan patent, No. 346,190. It describes and illustrates a valve gear for steam pumps. Like the different patents referred to in the litigation of the complainant and its predecessor, above cited, the Bryan patent may contain one or more of the elements that are common to engines or motors, but we can find no combination of either of the claims of the patent in suit. It is true that it does show a certain arrangement of collar valves in which springs are used to perform the function of imparting to said collar valves a completed movement. But in all essentials the structure and arrangement of the Bryan device is essentially dissimilar to that of the motor of the patent in suit. Claims numbered I and II of the patent in suit are both for a combination of elements in a water motor, while the Bryan patent relates to a valve gear for a steam pump.

Taking up the matter of comparison again, the elements of claim I in the patent in suit, with the structure of the Bryan patent, while the element "a cylinder" has a corresponding part in the Bryan patent, namely, the steam cylinder of the pump, the element "a piston divided into two noncommunicating chambers" has no corresponding element in the Bryan device. The element "hollow rods communicating with said chambers" has no corresponding part in the Bryan device. The elements "double puppet inlet valves and double puppet exhaust valves, mounted in said piston" have no corresponding elements in the Bryan device. The element represented by "springs adapted to impart to said valves their final movements after being unseated" has no corresponding part in the Bryan device, as it appears from an examination of the drawing that there are no such valves as are referred to in the patent in suit. We have no trouble in determining that the Bryan device is not the equivalent of the combination of spring and double puppet valves in claim I of the patent in suit. A further comparison of the elements of claim II of the patent in suit with the Bryan patent discloses a similar disparity.

It is therefore evident that the Bryan device does not show the combination called for by either claim I or claim II of the patent in suit, does not describe or illustrate a device which possesses the in-

vention set forth in these two claims of the patent in suit. The most that can be said for the Bryan patent is that the inventor had in mind a peculiar valve gear for steam pumps as stated in his patent. This specification that a spring is employed to complete the stroke of this peculiar type of valve in no way suggests the combination of elements set forth in the claims of the patent in suit.

A further analysis of the Bryan patent shows collar valves fastened to a rod extending out to the end of the steam chest, partitions of the valve chest into five chambers, the valve rod passing through a stuffing box in an end of the steam chest, and other items of mechanism, each performing its function, which, when contrasted with the valve mechanism of the patent in suit, show no elements or the equivalents of the patent in suit, contained in the structure of the Bryan patent.

We may add that the evidence of tests of the Bryan patent is far from satisfactory as a demonstration that such a device could be successfully used as a means of operating a domestic washing machine. Clearly it was not designed by its maker, nor adapted to, nor actually used for, the performance of such functions. It is not sufficient to constitute an anticipation that the device relied upon might, by modification, be made to accomplish the function performed by the patent in suit. Topliff v. Topliff, supra. The claim of the defendants with reference to the Bryan patent, therefore cannot be sustained.

The attention of the Court is called to what is referred to as the Kampmann patent, and the Cramer & Hack patent. The record discloses that they were filed, one more than one year, and the other more than two years, after the original Coffield application was filed.

Attention is also called to the Moyer patent, which consisted of a series of cylinders, one imposed upon the other, with a system of lever connections, the whole being designed to be mounted upon the bottom of a tub, and does not contain the invention of the patent in suit, and there is no evidence of its use or utility upon which a finding could be predicated, as urged by the defendants, to the effect that the patent in suit did not for the first time supply the means for operating the domestic washing machine and develop a new industry and a new field.

No error was committed by the trial court in refusing to permit the amendment of defendants' answer to involve the case alleged by defendants to have been brought by Peter T. Coffield & Son, complainant's predecessor, against Hax & Davidson in the Circuit Court of the United States for the Southern District of Ohio. No consideration can therefore be given testimony embraced within this appeal record involving that case.

The next contention of the defendants is the defense of intervening rights, predicated upon the allegation that the public generally, and appellants specifically, acquired, during the interim between the issue of the original patent and the reissue thereof, vested rights. In the opinion filed in this case upon the former hearing in this court, as reported at 209 Fed. 614, 126 C. C. A. 608, it was said:

"There is also abundant evidence to support the contention that defendant acquired no intervening rights between the time of plaintiff's original patent and its present reissue."

It appears from the record that these defendants became aware of the patented motor of the complainants, and proceeded to manufacture and have continued the manufacture and sale of infringements, notwithstanding repeated protests from the complainant and complainant's predecessor, Peter T. Coffield & Son. The record further discloses that about May 1, 1904, the defendant Wayne Manufacturing Company, who were then engaged in the manufacture of hand-operated washing machines and washtubs, sold to said Coffield & Son a number of tubs for use and sale in connection with the patented water motor in suit. It further appears that these commercial relations were continued, and said firm of Coffield & Son developed a valuable business in the manufacture and sale of their patented water motor in connection with said defendants' washtubs.

The attention of manufacturers of hand-operated tubs was attracted to this new means of operation, and letters were received by Coffield & Son inquiring as to the price at which the patented water motor might be obtained by them for resale in connection with their washtubs. It further appears from the record that among these inquiries was a letter from the defendant Wayne Manufacturing Company, dated June 29, 1906. It further appears from the testimony of Coffield that a few months after the receipt of this inquiry complainant's predecessor learned that the defendant Wayne Manufacturing Company was making and selling these water motors, infringing the patent in suit. It further appears that defendant companies thereafter were repeatedly notified of the infringement of said patent, and that they have continued to infringe said patent. It further appears that on December 21, 1909, the president of the defendant Wayne Manufacturing Company wrote a letter to said Coffield, attempting to form a combination between the defendant company and the Coffield Company, whereby the Wayne Company would acknowledge the validity of the patent in suit, and would derive benefits therefrom in the way of keeping up prices in the sale of infringing motors. It appears that no such arrangement could be made with Coffield, and that the defendant company continued the manufacture and sale of the infringing motor.

Upon the entire record we are of the opinion that the said defendant company did not begin the manufacture of water motors prior to the filing of the application for the reissued patent in suit. The record seems rather to support the contention of the complainant that the manufacture of these infringing water motors was not begun until after the attempt to make arrangements with the Coffields failed in June, 1906. This finding is entirely consistent with the letter dated June 29, 1906, written by the defendant Wayne Company, in which it endeavored to arrange for the purchase of complainant's motors in large quantities. It further appears that the first motor made by the Wayne Company had the springs mounted directly on the valve stems. Afterwards these springs were removed from direct connection with

the valves, and were put on the cylinder heads, as shown in the infringing motors above referred to.

Both of these motors were clearly infringements upon the claims of the original patent, and the reissued patent as well. Failing to enter into an arrangement whereby the patented motor might be purchased from complainant's predecessor, failing in the efforts of the president of the defendant company to form a combination or trust with complainant's predecessor, defendants appropriated the invention and became a competitor under two separate and distinct names, one the "Oh-Joy" and the other the "Royal." It appears from the record that the motors were practically identical, but the price at which one was sold was less than the other, the American Washer Company selling under one brand and price, and the Wayne Company selling under the other brand and price. The record discloses that the two companies defendant were in fact the Wayne Company, while pretending to be independent competing companies.

In view of these circumstances, the original patent and the reissued patent in suit were infringed, and are and were both clearly valid as to these appellants. Under these circumstances they can have no established vested intervening rights.

From the entire record we find that appellants had actual knowledge of the patented motor in suit prior to the manufacture by them of a marketable motor, and defendants' motors complained of herein were and are infringements of the complainant's patent; that defendants have persisted in said infringements, disregarding repeated protests from complainant and complainant's predecessor, and cannot now be heard to assert intervening rights.

The decree of the trial court is therefore affirmed, with costs.

HOOK, Circuit Judge, concurs in the result.

VACUUM CLEANER CO. v. AMERICAN ROTARY VALVE CO.

(District Court, S. D. New York. September 30, 1915.)

1. PATENTS ⚷328—VALIDITY AND INFRINGEMENT—VACUUM CLEANER.

The Kenney patent, No. 847,947, for apparatus for removing dust, covering the first commercially successful vacuum cleaner, claims 1, 3, and 4, were not anticipated, either in the prior patent art or by prior use, and disclose patentable invention; also *held* infringed; claim 2, in which the slot is not described as "narrow," *held* void for lack of invention, in view of the prior art.

2. PATENTS ⚷328—VALIDITY—VACUUM CLEANER.

The Kenney patent, No. 847,948, for apparatus for removing dust, *held* void for lack of patentable novelty.

3. PATENTS ⚷35—VALIDITY—EVIDENCE—COMMERCIAL UTILITY.

The commercial utility and success of a patented article, which shows the result of the experience of the workaday outside world, is entitled to great weight on the question of the validity of the patent, when in doubt. This rule places achievement above forgotten files and file wrappers, and

---

⚷For other cases see same topic & KEY-NUMBER in all Key-Numbered Digests & Indexes

is frequently an aid to the conclusion that what seems simple to-day was an unsolved problem yesterday.

[Ed. Note.—For other cases, see Patents, Cent. Dig. § 39; Dec. Dig. ⚷35.]

In Equity. Suit by the Vacuum Cleaner Company against the American Rotary Valve Company for infringement of claims 1, 2, 3, and 4 of United States letters patent No. 847,947, dated March 19, 1907, application filed November 29, 1901, and the single claim of United States letters patent No. 847,948, application filed March 16, 1903, each for "apparatus for removing dust." For convenience, the patents will be called the first patent and the second patent. On final hearing. Decree for complainant.

See, also, 208 Fed. 419.

Charles Neave, William G. McKnight, Vernon M. Dorsey, and Frank C. Cole, all of New York City, for plaintiff.

W. Clyde Jones, of Chicago, Ill., and John Robert Taylor, of New York City, for defendant.

MAYER, District Judge. The object of the first patent is stated in the specification as follows:

"The object of the invention is to provide an apparatus by which the cleaning or removing of dust may be accomplished with ease and dispatch and to practically clean any suitable surface, object, or article from every adhering particle of dust or dirt which can be removed. In the present invention suction is utilized, so that the dust or dirt is sucked into the apparatus and entirely removed from the compartment or room in which the dust was originally. The apparatus employed comprises in combination a suction nozzle adapted to be moved over the surface to which it is applied for cleaning and having a narrow inlet slot, a suction-creating device capable of maintaining a sufficient vacuum, and impurities-collecting means between the nozzle and suction-creating device and suitably connected therewith for removing the impurities from the air. When the apparatus is employed for cleaning carpets or other fabrics, the air is forced to penetrate the fabric at the suction nozzle, whereby the dust is removed from the body of the fabric as well as from the surface without subjecting the fabric to any mechanical action that will wear it away. * * * *The slot is restricted and narrow, and the bounding and defining lips thereof are so disposed that the outward mouth of the slot lies in what when the cleaner is in use constitutes the contact surface of the implement, so that it will hug the surface to be cleaned.*"

The claims are:

"1. In a suction-cleaning apparatus, the combination of a suction nozzle adapted to be moved over the surface to which it is applied for cleaning and having a narrow inlet slot, a suction-creating device capable of maintaining a sufficient vacuum, and impurities-collecting means between the nozzle and the suction-creating device and suitably connected therewith for removing the impurities from the air, substantially as described.

"2. In an apparatus for removing dust or dirt, the combination of a suction-creating device capable of maintaining a sufficient vacuum, an inlet head or shoe having an unobstructed elongated slot and so constructed that the edges of the slot may be brought into contact with the surface of the object to be cleaned, and a separator intermediate of and suitably connected with the suction-creating device and the inlet head or shoe for removing the dust from the air, substantially as described.

"3. In a suction-cleaning apparatus, the combination of a suction nozzle adapted to be moved over the surface to which it is applied for cleaning and having a narrow inlet slot, a power-operated suction pump, and impurity-col-

lecting means between said nozzle and pump adapted to remove the impurities from the air and prevent fouling the pump while permitting the working vacuum to be maintained at the nozzle, substantially as described.

"4. A cleaner comprising a suction chamber, provided with a narrow inlet slot, the slot being bounded and defined by lips which lie in the contact surface of the cleaner, with the outward mouth of the slot lying in the plane of this contact surface, substantially as described."

The defenses are (1) anticipation; (2) lack of novelty; (3) prior use; and (4) noninfringement.

The commercial vacuum cleaner art has grown to substantial proportions and has been developed in two general directions: (1) The installation of plants in large buildings; and (2) the use in smaller areas, business and home, of single implements operated by hand or electric motive power. So rapidly has the commercial art grown that this suits seems to involve a controversy of substantial importance financially (the gross business of the Vacuum Company from 1905 to September 27, 1907, aggregating over $800,000, and the plaintiff, as the Vacuum Company's reorganized successor, having received since 1909 about $270,000 in license fees), and thus the defendant has presented a vigorous defense, especially in respect of the prior art and a certain prior use, known in the litigation as the "Westman defense."

There is no doubt that Kenney, the patentee, was the founder of the present vacuum cleaner commercial art, and that, prior to his time, efforts in the same direction resulted either in indifferent success or in absolute failure, although as far back as 1869 inventors had turned their attention to the subject-matter here concerned. McGaffey patent, No. 91,145, same as Lake British patent.

Defendant insists that the development of the art is largely due to natural increase of buildings and greater desire for easy and effective methods of cleanliness, and also to the warnings of scientific men in respect of badly behaved germs which find their nesting and developing places more particularly in dust-laden fabrics and floors; but I suppose that even in 1869 prudent housewives and others would have welcomed a labor-saving device for removing dust from floors and furniture, and as early as 1896 Messrs. Young and Douglass appreciated the problem of seeking out the "many nooks and corners not accessible to the broom, where the dust and dirt settle and accumulate, making nesting places for microbes and breeding disease. * * *" But neither they nor any one else prior to Kenney accomplished the result sufficiently to found or maintain any substantial business enterprise based upon their alleged inventions.

The success of Kenney was not accidental, nor is this a case where previous meritorious inventions have failed for want of capital. Kenney was almost the story book inventor. In 1901, when he made his invention, he had a cash capital of not more than $500, and he was working on a salary of $40 to $50 per week.

Mr. Foley, consulting engineer during the construction of the Frick Building in Pittsburg, met Kenney in New York in 1901, and, learning of Kenney's apparatus, went to Kenney's small room in Trinity Place, where experimental work was being carried on. Foley was sufficiently impressed, so that, after negotiation, the Kenney system

was installed in the Frick Building in May, 1902. The public demonstration of the operation of the Kenney vacuum cleaning installation was described in some Pittsburg newspapers, and thereafter the business grew by leaps and bounds, and after some changing of hands the patents are now owned by this plaintiff.

A history of the prior art will help to show why Kenney succeeded, where others theretofore failed. Like many combination patents, the principal elements of claims 1, 2, 3 of the first patent, speaking broadly, were old—i. e., (1) a suction-creating device; (2) a cleaning tool; and (3) a separator. In claim 4, for the cleaning tool, the emphasized characteristics are: (1) A narrow inlet slot, bounded by (2) lips which lie in the contact surface of the cleaner, with the outward mouth of the slot lying in the plane of this contact surface.

The testimony of the two experts, Professors Reeve and Kinealy, and the demonstrations in the courtroom, were interesting and to the point; but the situation gets down to the proposition that Kenney taught the art that the essential element was a narrow, elongated slot capable of contact or sealing with the surface to be cleaned. This element, co-operating with the others, produces for all practical purposes a vacuum, whereby the dirt is sucked up, as distinguished from an air current, where the material is blown up, and some of it escapes, although the surface seems to the layman's eye to be cleaned.

The prior art proceeded on the theory of noncontacting or nonsealing slots, or impracticable wide slots, and some of the illustrative apparatus, from a practical standpoint, were grotesque. McGaffey (No. 91,145 of 1869) depended on a "strong current of air * * * to take up the dust and dirt." The opening in the lower portion of the sweeper implement, situated near the front edge when in use, came "near the floor or carpets, leaving only sufficient space between to allow small particles of dust and dirt to pass under it. * * *" The model from the files of the Patent Office fully illustrates this theory, and thus it appears that, instead of contact or sealing, as in Kenney, there is not any close contact, nor any suggestion of the so-called vacuum idea.

In 1883 Leaycroft (No. 279,572) approached the problem on the theory of a sweeping apparatus, in which the dirt is removed from the surface to be swept by brushes, and a current of air used to convey the dirt into a retainer.

Cummings in 1891 (No. 460,935) shows a cleaning tool, the edges of the slot of which are adapted to rest upon the surface to be cleaned, but the opening in the bottom of the cleaning tool is very wide. Obviously, if Cummings had any thought of producing a vacuum, the tool was impracticable, because it would be sealed to the surface to be cleaned and not be moveable for practical purposes.

Much was made of the British Howard and Taite patents No. 10,271 of 1896, and defendant produced a model (Defendant's Exhibit No. 243) so constructed that the slot, though curved in outline, lies in a plane surface, so that it would make contact when moved over the surface; but I do not accept this as a correct representation, and it is certainly inconsistent with Figures 1 and 3 of the drawings. On the other hand,

plaintiff's model (Plaintiff's Exhibit 24) is correct, and is useful by way of illustrating the specification, particularly where it is provided that:

"If the front end of the apparatus be passed over a cushion, * * * such dust will be sucked up with the air current, * * *" and that "the inlet or inlets is or are moved over and *near* to the surface of a dusty cushion or other dusty article."

In other words, Howard and Taite failed to realize the theory of close contact and the production of a vacuum, instead of an air current.

J. J. Harvey (No. 577,854 of 1897) did not get away from the air current idea and had no conception of sealing contact, as is shown by his Figure 14, where the nozzle is open at both ends. The combined area of the openings at the ends of the slots is greater than that of the outlet pipe, and it is obvious that the device could not secure a practical vacuum at the slot.

In Westman (No. 628,505 of 1899) the inlet slot is not narrow, and the theory is to abrade the carpet and liberate the dust, which is then removed by a revolving brush and drawn by suction through a flexible hose into a settling box; some of the dust undoubtedly passing on into an exhaust fan. The Westman is certainly far removed from similarity to the Kenney first patent.

Much reliance is placed by defendant on the C. J. Harvey patent (No. 673,603 of May 7, 1901). There is no reference in the specification to the dimensions of the slot in the nozzles shown in Figures 3 and 5, and nothing to show that the slots are to seal with the surface to be cleaned. In Figures 1, 2, and 3 a circular nozzle is shown, surrounded by a brush and bellows arrangement, while in Figures 4 and 5, although there is "an elongated nozzle," it is shown as being elevated above the surface by means of rollers.

The scientific discussion of this patent may be found by those who are interested in the testimony of Professors Reeve and Kinealy; but the actual operation of the model (Defendant's Exhibit No. 285) made in accordance with Figure 5 of the patent, is its own condemnation, for, as a practical device, it was shown to be hopeless. The other patents cited in the prior art are not of sufficient merit to require comment.

[3] From the foregoing it will be seen that there is no patent which anticipates, and the many efforts prior to Kenney only serve to fortify the presumption of patentability which goes with the grant. But, if there were any doubt, commercial utility has resolved the doubt. I am a strong believer in the rule as to commercial utility. It often pierces a labyrinth of the technique of science and the law, and applies the experience of the big workaday outside world. It places achievement above forgotten files and file wrappers. It is frequently an aid to the conclusion that what seems simple to-day was an unsolved problem yesterday.

But, as we are dealing with an actual litigation, it becomes necessary to examine the claims in their bearing on validity and infringement. The important point about Kenney's invention was the construction of the cleaning tool, and almost every word in claim 4 is significant. So, also, in claims 1, 2, and 3 the combination of the tool described in claim 4 must appear, else the claim may be invalid, or an alleged infringing

device may not deserve condemnation. It will be noted that in claims 1 and 3 the inlet slot is described as "narrow," just as it is in claim 4; but in claim 2 the reference is to an "unobstructed elongated slot" and the word "narrow" is omitted.

Of course, as is well known, an applicant for a patent will use varying phraseology in his claims, in order to obtain as comprehensive a patent as possible, or/and by such use to avoid the pitfalls of language, so that later, if one claim is inaptly worded, some other claim will stand the test of attack. But where, as here, the patent is not entitled to too broad a scope, the omission of the word "narrow" must be regarded as significant, and the context does not help it out. In view of the prior art, this claim must be held to be void (Cummings and C. J. Harvey patents, more especially).

Claim 1 (as well as 2) is attacked because of the use of the words "sufficient vacuum." What was said in Woerheide v. H. W. Johns-Manville Co., 215 Fed. 604, and 220 Fed. 674, 136 C. C. A. 316, applies here. It is not possible, when dealing with fractional niceties, to use any safer language, else the risk is run of escape from the patent by some technical scientific variation.

As relating to infringement, it is clear that Plaintiff's Exhibits 3U and 3V, which are cleaners faced with felt, do not infringe; but it is claimed that, because the felt may or will wear away, contributory infringement must be found. There is no evidence to show any intent to use wrongfully these implements, and, in point of fact, I think there is not any such intention; but, in any event, plaintiff must produce some evidence before defendant can be held guilty of this tort.

In arriving at these conclusions, I have considered it unnecessary to discuss the details of the development of the art as relating to motive power and separators, because I have accepted these elements as old. Further, I have not overlooked the decisions of foreign courts, but I am quite in agreement with the views of Judge Dodge as stated in Haskell Golf Ball Co. v. Sporting Goods Sales Co., 210 Fed. at page 628.

But, even if the records were precisely the same, I am bound to reach an independent conclusion, and, although the decisions referred to are entitled to great respect, yet we all know how, even in our own courts, judges of long experience and recognized ability often differ, because of the very nature of the subject, on questions of patentable novelty and infringement.

Finally, the Westman defense is to be considered. From the mass of testimony taken and the earnest argument, it is apparent that the defendant relies strongly on this defense. To attempt to review the testimony pro and con would be to extend this opinion almost to the length of the combined briefs. I am not convinced beyond a reasonable doubt, in the main for the following reasons, which I will summarize:

(1) The conflict of testimony in respect of a device as to the identity of which there is nothing but oral testimony.

(2) The failure of Westman to accomplish any substantial results, although living in Richmond and Norfolk, both fair-sized communities, and especially the failure of the apparatus at the Hotel Walton, Philadelphia, and Hotel Chamberlain, at Old Point Comfort.

(3) Westman's letter to his nephew in December, 1900, and the correspondence with the Roots Company.

(4) The fact that Westman obtained a patent, No. 628,505, in 1899, which in no way approaches the Kenney idea, but is along a different theory. In this connection, I am not unmindful of the summing up of defendant's counsel; but, as Westman applied for one patent, I do not see why, if he had the device claimed, he should not have applied for a patent for that.

In brief, this branch of the case must be governed by the principles stated in such cases as Emerson & Norris Co. v. Simpson Bros. Corp., 202 Fed. 747, at page 750, 121 C. C. A. 113; De Laski & Thropp, etc., Co. v. Fisk Rubber Co., 203 Fed. 986, 122 C. C. A. 286; The Barbed Wire Patent, 143 U. S. 275, 12 Sup. Ct. 443, 36 L. Ed. 154; Deering v. Winona Harvester Works, 155 U. S. 286, 15 Sup. Ct. 118, 39 L. Ed. 153; Lalance & Gresjean Co. v. Habermann Mfg. Co. (C. C.) 53 Fed. 375. I therefore conclude that claim 2 of the first patent is invalid, but that claims 1, 3, and 4 are valid and infringed, except as indicated supra.

[2] As to the second patent, I think it is invalid for lack of patentable novelty, and, as this result seems inevitable, once the art is understood, I see no value in any discussion of this patent.

Plaintiff may propose a decree on five days' notice in accordance herewith, but without costs.

IOWA WASHING MACH. CO. v. MONTGOMERY WARD & CO.

(District Court, S. D. New York. November 18, 1915.)

1. PATENTS ⟹328—VALIDITY AND INFRINGEMENT—REISSUE—WASHING MACHINE.

The Stocking and Mendenhall reissue patent, No. 12,733, for a washing machine, was not anticipated, discloses patentable novelty and invention, and the reissue was properly granted, because through inadvertence or mistake the original patent was inoperative to secure to the patentees the protection to which their invention entitled them; also *held* infringed.

2. PATENTS ⟹136—REISSUES—GROUNDS OF REISSUE.

Rev. St. § 4916 (Comp. St. 1913, § 9461), which authorizes a reissue of a patent when by reason of inadvertence, accident, or mistake the original is inoperative or invalid, does not mean that the patent as such must be inoperative or invalid, but that it is inoperative or invalid to secure the enjoyment of the invention which within its four corners it fairly discloses.

[Ed. Note.—For other cases, see Patents, Cent. Dig. §§ 201-203; Dec. Dig. ⟹136.]

3. COURTS ⟹350—EQUITY CAUSES—EFFECT OF RULE.

Equity rule 47 (198 Fed. xxxi, 115 C. C. A. xxxi), authorizing the granting of leave to take depositions, and fixing the time within which they may be taken, was not intended to vary or be a limitation upon Rev. St. § 863 (Comp. St. 1913, § 1472), which gives the right to take depositions de bene esse in certain cases, in any civil cause.

[Ed. Note.—For other cases, see Courts, Cent. Dig. § 923; Dec. Dig. ⟹350.]

In Equity. Suit by the Iowa Washing Machine Company against Montgomery Ward & Co. for infringement of reissue letters patent No. 12,733, for a washing machine, granted to Bert A. Stocking and Hiram Mendenhall. On final hearing. Decree for complainant.

Robert H. Parkinson and Wallace R. Lane, both of Chicago, Ill., for plaintiff.

Taylor E. Brown, of Chicago, Ill., and Ralph L. Scott, of New York City, for defendant.

MAYER, District Judge. There is a touch of business romance in this suit concerning a washing machine, and an illustration of the opportunities always open to ingenious men to make contributions to the general good and to gather in a just reward for their efforts. These patentees were men of limited attainments, who appreciated the desirability of producing, if possible, a washing machine arrangement which would be a substantial saver of labor, would be fairly simple in construction, and exceedingly simple in operation.

The prior art had developed a large variety of machines, which were objectionable mainly because of the wearing labor of operating them, and, in some instances, because the mechanism was so situated as to constitute a potential danger to the children of the modest household, who are so frequently about where these machines are likely to be. The patentees took perfectly well-known elements, and so arranged and combined them that they attained a result whereby women, and even children, possessing little strength, could with one hand easily and effectively do the washing contemplated. The combination was new, as a mere inspection of the patent and the device under consideration will demonstrate, when compared with the prior art.

It is frankly admitted by the expert for the defendant that the prior art does not show any construction containing all of the elements in the combination of the patent, and not a single prior art construction or device even approaches in arrangement the patent and the commercial device manufactured thereunder. The nearest approach to the patent in suit (and that is a good way off) is the Madison patent, and a mere inspection of that patent disposes of it either as an anticipation or as a negation of invention.

The trial of this suit is a useful example of trials in open court in cases involving easily understood mechanical constructions of the kind here involved. What the prior art amounts to is a demonstration of the ability of these patentees, because the very omission in the prior art of some of the elements and the different arrangement of the elements make clear that prior inventors were groping about, without success, to produce a machine which would dominate a comprehensive and fertile market.

It is not important to determine what percentage of all of the washing machines sold throughout the country is represented by the sale of the washing machines made under the patent in suit. It is enough to say that the sale of the device of the patent represents several millions of dollars at the price to dealers, and more still, of course, at the price to the buying public. This unquestioned commercial utility is important only as helping to resolve a doubt as to patentable novelty, if such existed, and, as I have indicated, I think there can be no doubt as to the validity of the patent from the standpoint of invention.

The value of the patent, to make a trite observation, is best demonstrated by the substantial copy of its construction exemplified in defendant's machine. Of course, there are some differences between defendant's machine and plaintiff's patent; but these differences are of no consequence, and are useful only as a talking point in a lawsuit. The real question in the case is whether the reissue patent is valid.

[1] The original patent and the reissue patent are for the same construction. In the reissue patent the claims are made broader by the elimination of certain unnecessary details set forth in the single claim of the original patent. The original patent is a fine example of incompetent soliciting. The claim reads as follows:

"In a washing machine, the combination of the following instrumentalities, to wit: A top-provided tub, a hinged door secured to said top, a main bracket secured vertically to said tub, a half ring extending from the lower end of said bracket, a hand lever pivotally secured to said half ring, a pin projecting from said hand lever, a rock bar also pivotally secured to said half ring, provided above with a slot within which is held said pin, a pitman extending from the lower end of said rock bar, a vertical shaft secured pendent, from the bottom of said tub, a bevel gear secured to said shaft, a horizontal stub shaft suitably secured below the bottom of said tub, a bevel gear secured to said horizontal shaft meshing with said first-mentioned bevel gear, said pitman being pivotally secured to said bevel gear mounted upon said horizontal shaft, a bracket secured to said lid, a shaft projecting through said bracket and lid into said tub, a rack wheel secured to said last-mentioned shaft, an agitator head secured to said last-mentioned shaft, a pitman pivotally secured to said hand lever, and a rock bar meshing with said rack wheel, and adapted to be detachably secured to said last-mentioned pitman."

It is obvious that this claim enumerated many unnecessary and useless details, and constituted an invitation to infringers to avoid the real intent of the patentees and to encroach upon the field which the patentees had every reason to believe they had secured for themselves.

With a promptness that is greater than we ordinarily find in reissue cases, the patentees, after they obtained proper advice, applied for a reissue. With a brevity as commendable as it is surprising, the new solicitor placed the subject-matter clearly and simply before the Patent Office in an affidavit made by the patentees, in which they pointed out a typographical error (of no importance in view of the context of the original patent), and stated that they "were led to believe that the claim was broad enough in scope to cover the novel features of their invention." What they represented to the Patent Office was literally true. They had the same invention and, in substance, they claimed no more than they did before, but technically their claims were broader because by the omission of useless details they barred the way against intending infringers.

The new claims here in issue are as follows:

"3. The combination of a washing machine body, an agitator mounted in the top thereof, a balance wheel beneath the bottom thereof, a reciprocating lever, means connected with the lever for imparting an alternating rotary motion to the agitator and means connected with the lever for imparting a continuous rotary motion to the balance wheel, said means including a speed increasing gearing device.

"4. A washing machine body, an agitator mounted in its top, a balance wheel under the body and an operating device passed around the side of the

body and connecting the agitator and balance wheel and capable of operating both, said operating device including a speed increasing gearing for the balance wheel.

"7. The combination with a washing machine body, an agitator, a balance wheel, a small gear wheel connected with the balance wheel, a large gear wheel in mesh with the small one, an operating device, means connected with the operating device for imparting an alternating rotary motion to the agitator, a pitman connected to the operating device for driving the large gear wheel, supporting legs for the body, a bar beneath the body, said bar forming a support for the balance wheel and said legs serving to protect the balance wheel and gear wheels."

Nobody was hurt, there were no intervening rights, and the reissue was not an attempt to incorporate after-acquired knowledge, but was simply an effort to express in technically correct phraseology what had been botched by the first solicitor.

So much has been written as to reissues that an elaborate review of the authorities collated and commented upon by respective counsel seems unnecessary. The fundamental test in considering the reissue statute is good faith. Somehow the courts are usually able to see through a situation, and to realize whether the reissue has been applied for and obtained in good faith, for the purpose of curing inadvertence or mistake, or whether the reissue merely represents an attempt to corral the art in essential particulars, which the inventor never disclosed and probably knew nothing about.

[2] It is quite clear that, through error which has arisen by inadvertence or mistake and without any fraudulent or deceptive intention, the original patent was inoperative for the purposes intended, as is required by section 4916, Rev. St. I think that the statute does not mean that the patent as such must be inoperative or invalid, but does mean that the patent is inoperative or invalid to secure the enjoyment of the invention which the patent within its four corners fairly discloses. Topliff v. Topliff, 145 U. S. 156, 12 Sup. Ct. 825, 36 L. Ed. 658; Autopiano Co. v. American Player Action Co., 222 Fed. 276, — C. C. A. —; Baldwin v. Abercrombie Fitch Co., 227 Fed. 455, affirmed 228 Fed. 895.

Within the principles stated in these cases (and others which could be cited), the facts in the suit at bar sustain the reissue. And thus, if I am right, the romance ends with the success of the original patentees in securing and retaining for themselves the fruits of their ability, instead of being compelled to look on as regretful spectators while others enjoy what is justly theirs.

[3] Finally, I am asked to pass upon a question of practice in respect of which it is said the members of the bar are somewhat in doubt. The defendant objected to the admission in evidence of certain depositions taken by plaintiff without first obtaining leave of court. These depositions were taken under section 863, R. S. U. S. and apparently within the time provided by equity rule 47 (198 Fed. xxxi, 115 C. C. A. xxxi), but without an order of court. I am of opinion that equity rule 47 was not intended to vary or be a limitation upon section 863, because, of course, that section, being a legislative enactment, cannot be changed except by further legislative enactment.

I have conferred with my associates, Judges HOUGH, LEARNED HAND, and AUGUSTUS N. HAND, and they authorize me to state that they concur in this view.

For the reasons above outlined, the plaintiff may have the usual decree, with costs, and the decree will be settled on five days' notice.

PANOULIAS v. NATIONAL EQUIPMENT CO. et al., with three other cases.

(District Court, S. D. New York. August 13, 1915.)

PATENTS ⚷325—ACCOUNTING FOR INFRINGEMENT—COSTS.

On an accounting for infringement, as the hearing proceeds, each party should in the first instance pay the costs and expenses made by himself, including fees of the master and stenographer, leaving the question of their final payment to be determined when the decree is entered.

[Ed. Note.—For other cases, see Patents, Cent. Dig. §§ 607-612; Dec. Dig. ⚷325.]

In Equity. Suit by Panayiotis Panoulias against the National Equipment Company and others, with three other cases. On application by special master for order respecting costs.

See, also, 198 Fed. 493.

AUGUSTUS N. HAND, District Judge. In the above action, and three others, references were ordered to a special master to take and state an account of profits and damages; the jury having already rendered a verdict, upon which an interlocutory decree was entered, that the defendants had infringed plaintiff's patent. The master has applied for an order specifying which party shall pay in the first instance for the proceedings before him, and submitted a charge for hearings already had during the past three years, including, as I understand it, the stenographer, who is an employé of his office, amounting to $3,000, approximately.

In the case of Brickill v. Mayor, etc., of the City of New York (C. C.) 55 Fed. 565, Judge Lacombe said on a question of master's fees prior to the termination of the hearing:

"* * * Each side should pay in the first instance, for its own adjournments, and for the costs, charges and expenses (including stenographer's fees), and master's fees for taking its own direct, redirect, cross, or recross examination of any witness or witnesses. Upon final decree the sums so paid by the prevailing party may be imposed upon the defeated party."

The same practice was followed by Judge Severens in the case of United States Printing Co. v. American Playing-Card Company (C. C.) 81 Fed. 506, where he held after conference with several of the judges of his circuit, that the usual practice should be pursued:

"* * * That is to say, that each party should pay the costs, upon the analogy of general equity rule 67, in the first instance, leaving the question of their final disposition to be determined when the decree is entered."

The Circuit Court of Appeals of the First Circuit, in the case of Fenno v. Primrose, 119 Fed. 801, 56 C. C. A. 313, held that it was a question of discretion how the expenses should be borne, where a case was referred to an auditor under methods taken from the Massachusetts state statute, and apparently referred to the case of Brickill v. Mayor, etc., of the City of New York (C. C.) 55 Fed. 565, with approval.

In the case of Macdonald v. Shepard (C. C.) 10 Fed. 919, Judge Lowell held, in the United States Circuit Court for the District of Massachusetts, that the practice was to have the costs borne, in the first instance, by the complainant. It is urged, not without a show of reason, that where there has been an adjudication of infringement, and the defendant has been ordered to account, he is presumptively liable for something, is a wrongdoer, has the duty of going forward and satisfying the court as to the question of damages and profits, and should therefore pay the expenses in the first instance.

Judge Wheeler, in the case of Urner v. Kayton (C. C.) 17 Fed. 539, held that, where defendants have been adjudged infringers and decreed to account, they must go forward and bear the necessary expenses of so doing, including the master's fee.

Thus, we have three doctrines: (1) The doctrine of Judge Lacombe and Judge Severens, cited with approval by the Circuit Court of Appeals for the First Circuit, that the expenses are to be borne separately; (2) the doctrine of Judge Lowell that the complainant must pay the expenses; and (3) the doctrine of Judge Wheeler that the defendant in a case where he has been adjudged an infringer must pay the expenses. I can certainly see no reason for Judge Lowell's doctrine, and I doubt if he would have applied it to a case where the defendant was adjudged an infringer. Parties prior to the termination of the litigation are obliged to pay their separate expenses as they arise. This is true of counsel fees, witness fees, and numerous other taxable items; nor do I think it would be desirable to require either party to pay the expenses of the other and be in a position where, by his mode of conduct of his case, he might compel his adversary, not only to pay such expenses as he now has to pay, but also fees of the master and the stenographer, which are often necessarily very substantial, and which might be greatly increased by an unnecessarily prolix conduct of the case by one of the parties.

I do not understand that either party is subject to any such criticism here; but I can readily see that the imposition of the fees of the master and stenographer upon one party, irrespective of the extent of his examination of witnesses, might enable the other to prolong a litigation unnecessarily at his adversary's expense. Nor do I appreciate that it is undesirable for the master to get fees in a long drawn-out reference until the hearings are completed. If, whenever the parties do not agree, the matter is left to the court, I can see no likelihood that a fair-minded master can be affected in his report by an order apportioning the fees. Under the circumstances, I will direct a payment on account to the master for his services and those of his stenographer of $1,500, to be apportioned according to the testimony taken by the respective parties.

TILDEN et al. v. BARBER et al.

(District Court, D. New Jersey. November 5, 1915.)

COURTS ⟹347—PLEADING—MOTION TO DISMISS.

Under new equity rule 29 (198 Fed. xxvi, 115 C. C. A. xxvi) a bill cannot be dismissed on motion, without answer, unless for "misjoinder, nonjoinder, or insufficiency of fact to constitute a valid cause of action in equity," appearing on the face of the bill.

[Ed. Note.—For other cases, see Courts, Cent. Dig. § 921; Dec. Dig. ⟹347.]

In Equity. Suit by William A. Tilden and others, receivers, against Ohio C. Barber and others. On motion to dismiss amended bill. Denied.

Hartshorne, Insley & Leake, of Jersey City, N. J., for complainants.
Collins & Corbin, of Jersey City, N. J., for defendants.

RELLSTAB, District Judge. The only undisposed-of ground underlying the motion to dismiss is based upon the supplement to the New Jersey Corporation Act, approved April 8, 1903 (P. L. N. J. 1903, p. 362), repealed in 1907 (P. L. N. J. p. 631), which act is as follows:

"A supplement to an act entitled 'An act concerning corporations' (Revision of 1896), approved April twenty-first, one thousand eight hundred and ninety-six.

"Be it enacted by the Senate and General Assembly of the state of New Jersey:

"1. Any director, officer, promoter or other agent of any corporation organized or existing under the laws of this state who shall have heretofore made or received, or who shall hereafter make or receive, while acting in such capacity, any bonus, profit or reward of any kind whatsoever out or on account of any transaction for or with such corporation, without disclosure of the fact of such bonus, profit or reward to the corporation and without obtaining its approval thereof, shall be liable to such corporation for the amount or value of such bonus, profit or reward for and during the period of four years from and after the making or receipt of the same and not afterwards; and an action shall lie on behalf of such corporation, either at law or in equity, to recover such bonus, profit or reward, or the value thereof, or for an account with respect thereto, at any time before the expiration of said period of four years, but not afterwards.

"2. This act shall take effect immediately, but shall not affect any action or proceeding pending in any court at the time it takes effect, or any right of any corporation, or of any stockholder, against any such director, officer, promoter, or other agent, under existing law, provided action thereon be commenced within six months after this act takes effect.

"Approved April 8, 1903."

Whether a defense founded upon this act may be presented on motion, without answer, depends upon the construction to be given to equity rule 29 (198 Fed. xxvi, 115 C. C. A. xxvi), which reads as follows:

"Demurrers and pleas are abolished. Every defense in point of law arising upon the face of the bill, whether for misjoinder, nonjoinder, or insufficiency of fact to constitute a valid cause of action in equity, which might heretofore have been made by demurrer or plea, shall be made by motion to dismiss or

in the answer; and every such point of law going to the whole or a material part of the cause or causes of action stated in the bill may be called up and disposed of before final hearing at the discretion of the court. Every defense heretofore presentable by plea in bar or abatement shall be made in the answer and may be separately heard and disposed of before the trial of the principal case in the discretion of the court. If the defendant move to dismiss the bill or any part thereof, the motion may be set down for hearing by either party upon five days' notice, and, if it be denied, answer shall be filed within five days thereafter or a decree pro confesso entered."

It is to be noted that, while this rule requires that "every defense heretofore presentable by plea in bar or abatement shall be made by answer," it is not every defense in point of law arising upon the face of the bill that heretofore was available on demurrer that can be disposed of on motion without answer. The proposed defense could have been pleaded in bar of the complainant's action and disposed of in advance of the principal case, at the discretion of the court. It cannot, however, be disposed of on motion, without answer, because it does not involve misjoinder or nonjoinder, and is not based on an "insufficiency of fact to constitute a valid cause of action in equity"—the only grounds upon which a bill of complaint may be dismissed without answer. The bill alleges every fact necessary "to constitute a valid cause of action in equity," as well as the reasons for the lapse of time in bringing suit. In such a situation, a statute (no longer existing) which, while in force, did not impair the cause of action to which it related, but only limited the time within which an action to enforce it could be brought, should be pleaded, with pertinent statements of fact making it applicable to the case made out by the bill.

The motion to dismiss is denied.

In re LEVY.

(District Court, E. D. New York. November 17, 1915.)

1. BANKRUPTCY ⟹417—DISCHARGE—RIGHT TO ATTACK—"PARTY IN INTEREST."

A creditor, whose claim is entirely wiped out by bankrupt's discharge, but who would have the right to proceed against the debtor if the discharge were revoked, is within Bankr. Act July 1, 1898, c. 541, § 15, 30 Stat. 550 (Comp. St. 1913, § 9599), permitting any "party in interest," not guilty of undue laches, to ask to have the discharge revoked for fraud.

[Ed. Note.—For other cases, see Bankruptcy, Cent. Dig. §§ 867–871; Dec. Dig. ⟹417.]

2. BANKRUPTCY ⟹152—ASSETS—LIFE POLICY—ASSIGNMENT—INTEREST OF TRUSTEE.

If, after death of bankrupt, his discharge be set aside, and the assignment of policies on his life be successfully attacked, their status, for the purpose of determining the interest of the trustee, would be as of the date of the adjudication of bankruptcy.

[Ed. Note.—For other cases, see Bankruptcy, Cent. Dig. §§ 194; Dec. Dig. ⟹152.]

3. BANKRUPTCY ⟹143—ASSIGNMENT OF LIFE POLICY—SETTING ASIDE—REDEMPTION.

If an assignment by bankrupt and his wife of policies on his life was void, their return after his death would give his wife the right to re-

---

⟹For other cases see same topic & KEY-NUMBER in all Key-Numbered Digests & Indexes

deem them within 30 days after determination of the surrender value, as of the date of the adjudication, as provided by Bankr. Act, § 70, subd. 5 (Comp. St. 1913, § 9654).

[Ed. Note.—For other cases, see Bankruptcy, Cent. Dig. §§ 194, 201, 202, 213–217, 223, 224; Dec. Dig. ⟹143.]

4. BANKRUPTCY ⟹146—CONCEALMENT OF ASSETS—ASSIGNMENT OF LIFE POLICY—INTEREST OF TRUSTEE.

That the schedules made no mention of bankrupt having assigned policies on his life would not entitle the trustee, after bankrupt's death, to the entire amount of insurance, as concealed property and increment thereof; the assignment having been in good faith, and the parties under a mistaken idea of his right to make it, and to leave out of the schedules the details thereof.

[Ed. Note.—For other cases, see Bankruptcy, Cent. Dig. § 193; Dec. Dig. ⟹146.]

5. BANKRUPTCY ⟹417—DISCHARGE—ATTACK—LACHES.

A creditor is not barred by laches from attacking, under Bankr. Act, § 15, the discharge, having acted in a month after ascertaining the facts.

[Ed. Note.—For other cases, see Bankruptcy, Cent. Dig. §§ 867–871; Dec. Dig. ⟹417.]

6. BANKRUPTCY ⟹417—DISCHARGE—REVOCATION—FRAUD.

The cash surrender value, at the time of the adjudication, to which only the estate was entitled, of life policies assigned by bankrupt, being only $17, in which the objecting creditor, because not having filed a claim, would have no interest, and it having been the evident intent of the parties merely to protect the policies from lapsing, and thus save the benefit to the beneficiary of the past insurance, the transfer will not be held a fraud on creditors, as ground for setting aside, under Bankr. Act, § 15, the discharge.

[Ed. Note.—For other cases, see Bankruptcy, Cent. Dig. §§ 867–871; Dec. Dig. ⟹417.]

In Bankruptcy. In the matter of Albert E. Levy, bankrupt. On motion to vacate the discharge. Motion denied.

Joseph Rosenzweig, of New York City, for petitioner.
Simon & Weinstein, of Brooklyn, N. Y., for assignee.

CHATFIELD, District Judge. The bankrupt above named filed voluntary schedules and was adjudicated upon August 1, 1914. Discharge was granted October 30, 1914, and on August 25, 1915, the bankrupt died. On the 30th of July, 1914, the bankrupt, together with his wife, assigned, for a present consideration, to the wife's sister, certain insurance policies taken out, respectively, in 1902, 1904, and 1906. The premiums were paid by the assignee, so that the policies were in force at the time of the bankrupt's death, and the company stands ready to pay the amount of the policies over and above certain loans which had been made by the bankrupt and his wife prior to the date of the assignments. The insurance company states that one of these policies had on July 30, 1914, no surrender value, and the other two policies had surrender values aggregating $16.72. None of these policies were listed in the schedules, and no estate passed into the hands of the trustee.

One of the creditors, who was scheduled, but did not seek to prove a claim in the estate, having learned of the existence of these in-

surance policies after the bankrupt's death, filed a petition, on October 1, 1915, to vacate the discharge upon the ground of fraud, asking that the proceedings then be opened with a view to obtaining the death claims payable on the policies. This creditor seeks, not only the surrender value, but the death benefit itself, upon the theory that the assignee and beneficiary were parties to the fraud, and therefore that the estate is entitled to the benefit of anything done by the assignee in pursuance of the fraud.

[1] The first question raised is the right of this creditor to attack the discharge. Section 15 provides that any party in interest, who has not been guilty of undue laches, may ask to have the discharge revoked on the ground of fraud. It must be held that a creditor whose claim is wiped out by the discharge, but who would have the right to proceed against the debtor if the discharge were revoked, is a party in interest, so far as the discharge was concerned. The words "party in interest," in section 15, cannot be confined merely to those persons who will share in the distribution of the estate. A creditor whose claim is entirely wiped out by the discharge has more interest in the validity of that discharge than one whose claim is but partially wiped out, and who will in any event receive a dividend if there is any estate to distribute in bankruptcy.

[2] The next question which is raised is that presented by the death of the bankrupt since his discharge. The case of Everett, Trustee, v. Judson, 228 U. S. 474, 33 Sup. Ct. 568, 57 L. Ed. 927, 46 L. R. A. (N. S.) 154, affirming 192 Fed. 834, 113 C. C. A. 158, disposes of this contention. If the discharge should be set aside and the assignment of the policies successfully attacked, their status for the purpose of determining the interest of the trustee would be as of August 1, 1914, and not that of the later date, when the bankrupt's death affected the liability of the insurance company, but did not change the surrender values prior to that time.

[3] This also disposes of the next question in the case. If the bankrupt could not make the assignment, and if the assignment is void, then the return of the policy would give the bankrupt or his wife the right to redeem the same within 30 days after determination of the surrender value, in accordance with the provisions of section 70, subd. 5.

[4] It may be inferred that the trustee and the attacking creditor rest their demand upon the proposition that the bankrupt, his wife, and his assignee, by their wrongdoing, have made it impossible for the trustee to take advantage of the provisions of section 70, subd. 5, and that therefore the estate is entitled, not only to recover the damage which has been suffered from their action, but also to recover any benefits which may have been received by the bankrupt or the assignee from the wrongdoing.

It is true that concealed property, with any accruals or increments belonging to the property, might be recovered from the party guilty of concealing these assets. But if the accruals or benefits would in any event have belonged to the parties guilty of the concealment, and if the only damage to the estate was the loss of the surrender value,

then, in equity, the real position of the parties should control, and the parties be merely restored to the position which they would have occupied, if that can fairly be done.

But in the present case the position of the assignee is even stronger, for the reason that the parties claim the assignment to have been made by the bankrupt in good faith, for a cash consideration of $100. Inasmuch as the bankrupt is dead, the evidence presented would seem to show at most that the parties were laboring under a mistaken idea as to his right to make the transfer and to leave out of the schedules the details of this transaction. Under such circumstances, the estate could recover only that to which it was rightfully entitled if the persons were placed in their original situation.

[5] The defense of laches is further urged by the assignee, but as the petition was verified September 28, 1915, upon facts ascertained after the death of the bankrupt in August, and as the surrender value of these policies was not learned until the beginning of these proceedings, it is evident that there was no laches on the part of the creditor; nor should the 30 days provided for by section 70, subd. 5, be held to have begun until this motion is properly disposed of. The cases of Burlingham v. Crouse, 228 U. S. 459, 33 Sup. Ct. 564, 57 L. Ed. 920, 46 L. R. A. (N. S.) 148, In re L. Hammel & Co., 221 Fed. 56, 137 C. C. A. 80, Milkman v. Arthe, 223 Fed. 507, —— C. C. A. ——, as well as Everett, Trustee, v. Judson, supra, limit the right of the trustee in any event to attack the transfer of the surrender values upon the two policies which had such a value on August 1, 1915, for the sum of $100.

[6] The objecting creditor did not consider it worth while to file a claim in bankruptcy. He therefore would have no interest in this $16.72 if it were returned. It would seem, therefore, that the value of these policies to the estate was so small, and the evident intent of the parties to protect the policies from lapsing, and thus save the benefit to the beneficiary of the past insurance, is so persuasive, that the transfer should not be held a fraud upon creditors, and the discharge in this case cannot now be set aside for that reason.

The motion to vacate the discharge will therefore be denied.

MEMORANDUM DECISIONS.

ALICE STATE BANK et al. v. HOUSTON PASTURE CO.† (Circuit Court of Appeals, Fifth Circuit. November 27, 1915.) No. 2823. In Error to the District Court of the United States for the Southern District of Texas; Waller T. Burns, Judge. Walter P. Napier, of San Antonio, Tex., for plaintiffs in error. W. D. Gordon, of Beaumont, Tex., for defendant in error. Before PARDEE and WALKER, Circuit Judges, and SPEER, District Judge.

PER CURIAM. On the evidence shown in the transcript the legal title to the land in controversy is in the Houston Pasture Company. The plaintiffs in error show no sufficient title by limitation. See Hyde v. McFaddin, 140 Fed. 433, 72 C. C. A. 655. We conclude from the evidence that the judge below properly directed a verdict for defendant in error. Affirmed.

ATCHISON, T. & S. F. RY. CO. v. UNITED STATES & MEXICAN TRUST CO. et al. (Circuit Court of Appeals, Eighth Circuit. October 27, 1915.) No. 4343. Appeal from the District Court of the United States for the District of Kansas. William R. Smith, of Topeka, Kan., for appellant. Samuel Untermyer, of New York City, and John A. Eaton, S. W. Moore, and D. W. Eaton, all of Kansas City, Mo., for appellees.

PER CURIAM. Dismissed, at costs of appellant, per stipulation; taxation of attorney's fee for appellees waived.

BABER v. UNITED STATES. (Circuit Court of Appeals, Eighth Circuit. May 17, 1915.) No. 4388. In Error to the District Court of the United States for the Eastern District of Oklahoma. H. B. Martin and A. F. Moss, both of Tulsa, Okl., for plaintiff in error. D. H. Linebaugh, U. S. Atty., of Atoka, Okl., and W. P. McGinnis, Asst. U. S. Atty., of Muskogee, Okl.

PER CURIAM. Reversed, on confession of error by defendant in error, without costs to either party in this court, and cause remanded, with directions to grant a new trial.

BUTLER v. UNITED STATES. (Circuit Court of Appeals, Eighth Circuit. May 31, 1915.) No. 4358. In Error to the District Court of the United States for the Eastern District of Oklahoma. James C. Denton, of Muskogee, Okl., for plaintiff in error. D. H. Linebaugh, U. S. Atty., of Atoka, Okl., and W. P. McGinnis, Asst. U. S. Atty., of Muskogee, Okl.

PER CURIAM. Reversed, on confession of error by defendant in error, without costs to either party in this court, and cause remanded, with directions to grant a new trial.

CARPENTER v. McDONALD. (Circuit Court of Appeals, Sixth Circuit. June 12, 1915.) No. 2644. Appeal from the District Court of the United States for the Western District of Michigan. Charles H. Watson, of Crystal Falls, Mich., for appellant. G. R. Empson, of Gladstone, Mich., for appellee.

PER CURIAM. Affirmed, pursuant to stipulation.

CARTER CAR CO. v. McINTOSH et al. (Circuit Court of Appeals, Sixth Circuit. October 9, 1915.) No. 2743. Appeal from the District Court of the United States for the Eastern District of Michigan. R. A. Parker, of Detroit, Mich., for appellant. V. H. Lockwood, of Indianapolis, Ind., for appellee.

PER CURIAM. Dismissed pursuant to stipulation.

† Rehearing denied January 4, 1916.

CENTRAL TRUST CO. of NEW YORK v. CITY OF DULUTH et al. (Circuit Court of Appeals, Eighth Circuit. May 3, 1915.) No. 4248. Appeal from the District Court of the United States for the District of Minnesota. Washburn, Bailey & Mitchell, of Duluth, Minn., for appellant. Davis, Kellogg & Severance, of St. Paul, Minn., and Francis W. Sullivan, of Duluth, Minn., for appellees.

PER CURIAM. Appeal dismissed, without costs to either party in this court, per stipulation of parties.

CENTRAL TRUST CO. OF NEW YORK et al. v. EQUITABLE TRUST CO. OF NEW YORK et al. (Circuit Court of Appeals, Sixth Circuit. October 9, 1915.) No. 2669. Appeal from the District Court of the United States for the Northern District of Ohio. Hoyt, Dustin, Kelley, McKeehan & Andrews, of Cleveland, Ohio, Joline, Larkin & Rathbone, and Byrne & Cutcheon, all of New York City, Cook, McGowan & Foote, of Cleveland, Ohio, Guggenheimer, Untermeyer & Marshall, of New York City, M. B. & H. H. Johnson, of Cleveland, Ohio, and Alexander & Green, of New York City, for appellant. Squire, Sanders & Dempsey, Joseph G. Fogg, Frank H. Ginn, and S. H. Tolles, all of Cleveland, Ohio, John Quinn, of New York City, Smith & Beckwith, of Toledo, Ohio, Holmes, Rogers & Carpenter, of New York City, and Carl Dautel, of Cleveland, Ohio for appellee.

PER CURIAM. Decree modified pursuant to stipulation.

CHAPMAN et al. v. CHEMICAL BLDG. CO. et al. (Circuit Court of Appeals, Eighth Circuit. December 6, 1915.) No. 4312. Appeal from the District Court of the United States for the Eastern District of Missouri. W. B. & Ford W. Thompson, of St. Louis, Mo., for appellants. Eliot, Chaplin, Blaney & Bedal, of St. Louis, Mo., for appellees.

PER CURIAM. Dismissed, with costs, on motion of appellants; taxation of attorney's fee waived by appellees.

CHICAGO GREAT WESTERN R. CO. v. LeVALLEY. (Circuit Court of Appeals, Eighth Circuit. December 13, 1915.) No. 4459. In Error to the District Court of the United States for the Northern District of Iowa. Carr, Carr & Evans, of Des Moines, Iowa, for plaintiff in error. E. P. Andrews and B. H. Mallory, both of Hampton, Iowa, for defendant in error.

PER CURIAM. Affirmed, with costs, pro forma, without opinion.

CITY OF TEXARKANA, ARK., v. TEXARKANA WATER CORP. (Circuit Court of Appeals, Eighth Circuit. May 3, 1915.) No. 4168. Appeal from the District Court of the United States for the Western District of Arkansas. Frank S. Quinn, of Texarkana, Ark., for appellant. William H. Arnold, of Texarkana, Ark., for appellee.

PER CURIAM. Dismissed, with costs, for want of prosecution.

COCA-COLA CO. v. BRANHAM et al. (Circuit Court of Appeals, Eighth Circuit. May 18, 1915.) No. 4414. Appeal from the District Court of the United States for the Eastern District of Oklahoma. F. B. Dillard and William Blake, both of Tulsa, Okl., and Harold Hirsch and William D. Thomson, both of Atlanta, Ga., for appellant. H. W. Randolph, John A. Haver, and Randolph Shirk, all of Tulsa, Okl., for appellees.

PER CURIAM. Appeal (from 216 Fed. 264) dismissed, without hearing on merits, on motion of appellants.

COLORADO SMELTING & MINING CO. v. LUPOLD. SAME v. WILEY. (Circuit Court of Appeals, Eighth Circuit. September 27, 1915.) Nos. 4329, 4330. Appeals from the District Court of the United States for the District of Colorado. Hughes & Dorsey, of Denver, Colo., and Carl J. Sigfrid, of Ouray, Colo., and John Q. Dier, of Denver, Colo., for appellants. James B. Nash and Dexter T. Sapp, both of Gunnison, Colo., for appellees.

PER CURIAM. Dismissed, with costs, for want of prosecution, on motion of appellees.

In re DETROIT MOTOR & MACHINE CO. (Circuit Court of Appeals, Sixth Circuit. November 12, 1915.) No. 2661. Petition for Revision from the District Court of the United States for the Eastern District of Michigan. Beaumont, Smith & Harris, of Detroit, Mich., for appellant. Miller, Smith, Canfield, Paddock & Perry and Anderson, Wilcox & Lacy, all of Detroit, Mich., for appellee.

PER CURIAM. Dismissed pursuant to stipulation.

DETWILER v. UNITED STATES. (Circuit Court of Appeals, Eighth Circuit. June 14, 1915.) No. 4495. In Error to the District Court of the United States for the Western District of Missouri. James S. Gibson, of Kansas City, Mo., for plaintiff in error.

PER CURIAM. Writ of error as to Jacob S. Detwiler docketed and dismissed, without costs to either party in this court, and defendant ordered to surrender himself to the custody of the United States marshal for the Western district of Missouri within 30 days from date of filing of mandate in district court, and mandate ordered to issue forthwith, per stipulation.

FARISH v. STATE BANKING BOARD OF OKLAHOMA et al. STATE BANKING BOARD OF OKLAHOMA v. FARISH. (Circuit Court of Appeals, Eighth Circuit. December 6, 1915.) Nos. 4198, 4199. Appeal and Cross-Appeal from the District Court of the United States for the Eastern District of Oklahoma. Amos L. Beaty, of New York City, for Farish. Ledbetter, Stuart & Bell, of Oklahoma City, Okl., for State Banking Board and others.

PER CURIAM. Dismissed, with costs, for want of prosecution.

GRIFFIN WHEEL CO. v. UNITED STATES & MEXICAN TRUST CO. et al. (Circuit Court of Appeals, Eighth Circuit. October 27, 1915.) No. 4381. Appeal from the District Court of the United States for the District of Kansas. Hadley, Cooper & Neel, of Kansas City, Mo., for appellant. Samuel Untermyer, of New York City, and Samuel W. Moore, of Kansas City, Mo., for appellees.

PER CURIAM. Dismissed, at costs of appellant, per stipulation of parties; taxation of attorney's fee for appellees waived.

HAND v. CLINE. (Circuit Court of Appeals, Ninth Circuit. December 4, 1915.) No. 2673. Appeal from the District Court of the United States for the Southern Division of California. Guy Eddie, of Los Angeles, Cal., for appellant. Tracy Chatfield Becker, of Los Angeles, Cal., for appellee.

PER CURIAM. Pursuant to stipulation, signed by appellant and counsel for the respective parties, and filed November 22, 1915, to dismiss the appeal therein, ordered, order of this court, entered November 10, 1915, submitting cause for consideration and decision, vacated, and appeal dismissed, with costs in favor of appellees and against appellant.

HART v. UNITED STATES. (Circuit Court of Appeals, Second Circuit. October 12, 1915.) In Error to the District Court of the United States for the Northern District of New York. On motion to enlarge or to reduce bail. See, also, 216 Fed. 374. Before LACOMBE, COXE, and ROGERS, Circuit Judges.

PER CURIAM. The delay in the presentation of this cause has resulted from the government's failure to propose amendments to the proposed bill of exceptions. Had it been reasonably expeditious, the cause could have been argued before the adjournment in June last. Under these circumstances we think the application of plaintiff in error should be granted, to the extent of reducing the amount of bail to $10,000. So ordered.

HOSS et al. v. UNITED STATES. (Circuit Court of Appeals, Eighth Circuit. May 6, 1915.) No. 4087. In Error to the District Court of the United States for the Western District of Oklahoma. Burwell, Crockett & Johnson, of Oklahoma City, Okl., for plaintiffs in error. Isaac D. Taylor, Asst. U. S. Atty., of Guthrie, Okl.

PER CURIAM. Writ of error dismissed as to Raymond H. Hoss only on his motion, without prejudice to rights of C. M. Hoss, without costs to either party in this court. Mandate to issue forthwith, and the defendant Raymond H. Ross to surrender to the custody of the United States marshal within 30 days after the date of the filing of the mandate in the District Court. See, also, 227 Fed. 1018, — C. C. A. —.

HOSS v. UNITED STATES. (Circuit Court of Appeals, Eighth Circuit. May 6, 1915.) No. 4088. In Error to the District Court of the United States for the Western District of Oklahoma. Burwell, Crockett & Johnson, of Oklahoma City, Okl., for plaintiff in error. Isaac D. Taylor, Asst. U. S. Atty., of Guthrie, Okl.

PER CURIAM. Writ of error dismissed, without costs to either party in this court, and mandate ordered forthwith, on motion of plaintiff in error. See, also, 227 Fed. 1018, — C. C. A. —.

INTERNATIONAL & G. N. RY. CO. v. UNITED STATES & MEXICAN TRUST CO. et al. (Circuit Court of Appeals, Eighth Circuit. September 29, 1915.) No. 4344. Appeal from the District Court of the United States for the District of Kansas. Henry M. Beardsley and John G. Schaich, both of Kansas City, Mo., and David R. Dabney, of Houston, Tex., for appellant. John A. Eaton and D. W. Eaton, both of Kansas City, Mo., Samuel Untermyer, of New York City, and Samuel W. Moore, of Kansas City, Mo., for appellees.

PER CURIAM. Dismissed, at costs of appellant; attorney fee for appellees waived, per stipulation of parties.

JACOBS & DAVIES, Inc., v. WRIGHT. (Circuit Court of Appeals, Sixth Circuit. October 9, 1915.) No. 2701. In Error to the District Court of the United States for the Eastern District of Tennessee. Williams & Lancaster and Allison, Lynch & Phillips, all of Chattanooga, Tenn., for appellant. R. T. Wright, Jr., of Chattanooga, Tenn., and Barry Wright, of Rome, Ga., for appellee.

PER CURIAM. Dismissed pursuant to stipulation.

KING CHOO v. UNITED STATES. LAW KING v. UNITED STATES. (Circuit Court of Appeals, Second Circuit. October 13, 1915.) In Error to the District Court of the United States for the Northern District of New York.

On motion to enlarge on bail. Before LACOMBE, COXE, and WARD, Circuit Judges.

PER CURIAM. Application to admit to bail is denied, with leave to renew upon the presentation of a bill of exceptions or a certified court record, showing what actually took place at the time the judgment of deportation was entered. The proceeding, so far as the papers now before the court are concerned, was most informal; there is nothing to show officially what evidence there was.

LAMAR v. UNITED STATES. (Circuit Court of Appeals, Second Circuit. October 5, 1915.) No. 59. In Error to the District Court of the United States for the Southern District of New York. On motion to dismiss writ of error. See, also, 210 Fed. 685. Carl E. Whitney, of New York City, for plaintiff in error. H. Snowdin Marshall, U. S. Atty., of New York City. Before LACOMBE, COXE, and WARD, Circuit Judges.

PER CURIAM. If the appeal to the Supreme Court be discontinued, this motion will be denied. If plaintiff in error elects to prosecute it, this motion will be granted. Plaintiff in error may have 10 days in which to make his election.

LEHIGH & WILKES-BARRE COAL CO. v. HARTFORD & N. Y. TRANSP. CO. HARTFORD & N. Y. TRANSP. CO. v. LEHIGH & WILKES-BARRE COAL CO. (Circuit Court of Appeals, Second Circuit. October 5, 1915.) Nos. 295, 296. Appeals from the District Court of the United States for the Southern District of New York. Before LACOMBE, COXE, and WARD, Circuit Judges.

PER CURIAM. A libel and cross-libel were filed in the District Court. These together constitute but one cause. The District Judge directed that the cross-libel be dismissed and that the original libelant recover some $4,000 against the cross-libelant. Instead of entering one decree, as the proper practice is, separate decrees were entered, and the cross-libelant appealed from each. The two claims were tried together in the District Court as one cause. But one record was printed on appeal and but one argument had in this court. The appellant having succeeded very substantially in this court, viz., having reversed the decree against it, was given a full bill of costs, and we still think it was entitled thereto.

L. E. WATERMAN CO. v. STANDARD DRUG CO. et al. (Circuit Court of Appeals, Sixth Circuit. May 14, 1915.) No. 2615. Appeal from the District Court of the United States for the Northern District of Ohio. Watson & Raymond, of New York City, for appellant. T. H. Bushnell, of Cleveland, Ohio, for appellee.

PER CURIAM. Affirmed, with costs. See, also, 222 Fed. 1023, 137 C. C. A. 666.

LOCKE v. LEE. (Circuit Court of Appeals, Eighth Circuit. December 8, 1915.) No. 4579. In Error to the District Court of the United States for the District of Minnesota. Ambrose Tighe and E. W. Knapp, both of St. Paul, Minn., for plaintiff in error. W. S. Lauder, of Wahpeton, N. D., and Durment, Moore, Oppenheimer & Haupt, of St. Paul, Minn., for defendant in error.

PER CURIAM. Dismissed, without costs to either party in this court; mandate to issue forthwith, and attorney fee for defendant in error waived, per stipulation of parties.

LYONS v. RICHARDS et al. (Circuit Court of Appeals, Eighth Circuit. May 13, 1915.) No. 4369. In Error to the District Court of the United States for the District of Minnesota. M. D. Purdy and W. H. McDonald, both

of Minneapolis, Minn., for plaintiff in error. George C. Stiles and John P. Devaney, both of Minneapolis, Minn., for defendants in error.

PER CURIAM. Affirmed, with costs, pro forma.

McCLINTIC-MARSHALL CONST. CO. v. KESLER. (Circuit Court of Appeals, Sixth Circuit. November 12, 1915.) No. 2762. In Error to the District Court of the United States for the Northern District of Ohio. Squire, Sanders & Dempsey, of Cleveland, Ohio, for appellant. Anderson & Hahn, of Youngstown, Ohio, for appellee.

PER CURIAM. Dismissed, pursuant to motion.

McMILLAN v. UNITED STATES. (Circuit Court of Appeals, Eighth Circuit. June 1, 1915.) No. 4413. In Error to the District Court of the United States for the Eastern District of Oklahoma. James C. Denton, of Muskogee, Okl., for plaintiff in error. D. H. Linebaugh, U. S. Atty., and W. P. McGinnis, Asst. U. S. Atty., both of Muskogee, Okl.

PER CURIAM. Reversed, on confession of error by defendant in error, without costs to either party in this court, and cause remanded, with directions to grant a new trial.

MEGGINSON v. UNITED STATES. (Circuit Court of Appeals, Eighth Circuit. May 25, 1915.) No. 4399. In Error to the District Court of the United States for the Eastern District of Oklahoma. L. O. Lytle, of Sapulpa, Okl., for plaintiff in error. D. H. Linebaugh, U. S. Atty., and W. P. McGinnis, Asst. U. S. Atty., both of Muskogee, Okl.

PER CURIAM. Reversed, on confession of error by defendant in error, without costs to either party in this court, and cause remanded, with directions to grant a new trial. See, also, 227 Fed. 1020, — C. C. A. —.

MEGGINSON v. UNITED STATES. (Circuit Court of Appeals, Eighth Circuit. May 25, 1915.) No. 4400. In Error to the District Court of the United States for the Eastern District of Oklahoma. L. O. Lytle, of Sapulpa, Okl., for plaintiff in error. D. H. Linebaugh, U. S. Atty., and W. P. McGinnis, Asst. U. S. Atty., both of Muskogee, Okl.

PER CURIAM. Reversed, on confession of error by defendant in error, without costs to either party in this court, and cause remanded, with directions to grant a new trial. See, also, 227 Fed. 1020, — C. C. A. —.

MIDLAND VALLEY R. CO. v. HENDERSHOT. (Circuit Court of Appeals, Eighth Circuit. November 2, 1915.) No. 4509. In Error to the District Court of the United States for the Eastern District of Oklahoma. Farrar L. McCain, of Muskogee, Okl., for plaintiff in error. Bert G. Wood and O. T. Gilbertson, both of Muskogee, Okl., for defendant in error.

PER CURIAM. Dismissed, at costs of plaintiff in error, except that no attorney's fee is to be taxed for defendant in error, on motion of plaintiff in error and stipulation of parties.

NEW YORK, C. & ST. L. R. CO. v. NIEBEL. (Circuit Court of Appeals, Sixth Circuit. October 9, 1915.) No. 2821. In Error to the District Court of the United States for the Northern District of Ohio. Charles A. Seiders, of Toledo, Ohio, for appellant. Marshall & Fraser, of Toledo, Ohio, for appellee.

PER CURIAM. Dismissed pursuant to stipulation. See, also, 214 Fed. 952, 131 C. C. A. 248.

NORTH MEMPHIS SAVINGS BANK et al. v. NEUHARDT. (Circuit Court of Appeals, Sixth Circuit. November 12, 1915.) No. 2736. Appeal from the District Court of the United States for the Western District of Tennessee. Silas McBee, Jr., of Memphis, Tenn., for appellant. G. J. McSpadden, of Memphis, Tenn., for appellee.

PER CURIAM. Dismissed by consent of parties.

PENNSYLVANIA STEEL CO. et al. v. NEW YORK CITY RY. CO. et al. (and four other cases). In re SECOND AVE. R. CO. IN CITY OF NEW YORK et al. v. ROBINSON. (Circuit Court of Appeals, Second Circuit. September 27, 1915.) No. 317. Appeal from the District Court of the United States for the Southern District of New York. Use and Occupation Proceeding. Motors Proceeding. On rehearing. Denied. Before COXE, WARD, and ROGERS, Circuit Judges.

PER CURIAM. It was incorrectly stated in the opinion (225 Fed. 734, — C. C. A. —) that the Metropolitan receivers had paid the special franchise tax for 1907 due in October of that year. This, however, in no way affects the decision, whose purpose was to define the manner in which the account should be stated between the receivers and the Second Avenue Railroad Company, viz.: That down to June 1, 1908, the receivers should be charged for use and occupation with an amount equal to the stipulated rent, and thereafter to November 13, 1908, only with the net earnings of the road. As the receivers have not paid the tax in question, they must be charged with it. The motion for a rehearing is denied.

PRICE v. GIBBS. (Circuit Court of Appeals, Sixth Circuit. June 12, 1915.) No. 2794. Appeal from the District Court of the United States for the Southern District of Ohio. John R. Tanner, of London, Ohio, for appellant. Chapin B. Beem, of Columbus, Ohio, for appellee.

PER CURIAM. Dismissed pursuant to stipulation.

RYDER et al. v. BRUNS. (Circuit Court of Appeals, Eighth Circuit. December 14, 1915.) No. 4468. Appeal from the District Court of the United States for the Northern District of Iowa. Wallace R. Lane and Sebastian Hinton, both of Chicago, Ill., for appellants. John E. Stryker, of St. Paul, Minn., for appellee.

PER CURIAM. Dismissed per stipulation of parties; costs of appeal to be paid by party incurring same.

ST. LOUIS S. W. RY. CO. OF TEXAS v. MACIEL (two cases).† (Circuit Court of Appeals, Fifth Circuit. November 27, 1915.) No. 2788. In Error to the District Court of the United States for the Western District of Texas; Gordon Russell, Judge. S. P. Ross and Sam R. Scott, both of Waco, Tex., for plaintiffs in error. S. Engelking, of San Antonio, Tex., for defendant in error. Before PARDEE and WALKER, Circuit Judges, and SPEER, District Judge.

PER CURIAM. These cases were tried together in the District Court, are brought to this court on separate writs, and were heard here together. The errors assigned relate to the charge of the court as given and to the refusal of special charges requested, and we find none of the assignments well taken. The charge of the court was clear, and fairly and fully covered the issues in both cases, and was as favorable to the plaintiff in error as the proof warranted. The judgment of the District Court is affirmed in both cases.

In re SILBERSTEIN. (Circuit Court of Appeals, Second Circuit. October 5, 1915.) No. 105. Appeal from the District Court of the United States for

† Rehearing denied January 4, 1916.

the Southern District of New York. On motion to dismiss appeal. See, also, 225 Fed. 665. Before LACOMBE, COXE, and WARD, Circuit Judges.

PER CURIAM. The questions raised on this motion will be disposed of when the appeal comes on for argument; but appellant must promptly give notice to the other creditors, or to those of them whose address can be ascertained, that appeal has been taken and that it is coming on for argument.

SINGER v. LAMONT, CORLISS & CO. (Circuit Court of Appeals, Second Circuit. November 9, 1915.) No. 35. Appeal from the District Court of the United States for the Southern District of New York. This cause comes here upon appeal from a decree of the District Court, Southern District of New York, holding a certain patent valid and infringed. The patent is No. 880,410, granted February 25, 1908, to Joseph B. Singer for a combined carton and display device. The opinion of the District Court, which will be found in 227 Fed. 462, holds that claims 2, 3, and 4 are infringed by defendant's device. Johnson & Galston, of New York City (C. G. Galston, of New York City, of counsel), for appellant. C. P. Goepel, of New York City, for appellee. Before LACOMBE, WARD and ROGERS, Circuit Judges.

PER CURIAM. We concur with Judge Mayer's reasoning and conclusion, and do not think it necessary to add anything to the discussion of the case in his opinion. Decree affirmed, with costs.

SMITH v. THORNBURGH et al. (Circuit Court of Appeals, Eighth Circuit. December 13, 1915.) No. 4450. Appeal from the District Court of the United States for the Eastern District of Oklahoma. Ledbetter, Stuart & Bell, of Oklahoma City, Okl., for appellant. Harlan Read, of Okmulgee, Okl., for appellees.

PER CURIAM. Appeal dismissed, with costs, per stipulation of parties.

THOMPSON et al. v. TRAVIS et al. (Circuit Court of Appeals, Fifth Circuit. November 27, 1915.) No. 2802. In Error to the District Court of the United States for the Eastern District of Texas; Gordon Russell, Judge. J. A. Bulloch, of Tyler, Tex., for plaintiffs in error. Geo. W. Steere, B. K. Goree, and H. A. Turner, all of Fort Worth, Tex., for defendants in error. Before PARDEE and WALKER, Circuit Judges, and SPEER, District Judge.

PER CURIAM. We find no reversible error in any of the assignments. The case seems to have been properly ruled and decided, and the judgment of the District Court is affirmed.

UNDERWOOD TYPEWRITER CO. v. E. C. STEARNS & CO. et al. (Circuit Court of Appeals, Second Circuit. October 7, 1915.) No. 270. Appeal from the District Court of the United States for the Southern District of New York. On motion for leave to move in the District Court to reopen. For former opinion, see 227 Fed. 74, — C. C. A. —. Arthur V. Briesen, of New York City, for petitioner. Before COXE, WARD, and ROGERS, Circuit Judges.

PER CURIAM. This case has been thoroughly considered by this court, both at the original hearing and on a motion for rehearing. The cases now particularly relied on were before us at that time and were duly considered. The mandate has gone to the District Court. We think that the motion should be denied.

UNION TRUST CO. v. DETROIT BODY CO. et al. (Circuit Court of Appeals, Sixth Circuit. October 9, 1915.) No. 2785. Appeal from the District Court of the United States for the Eastern District of Michigan. Robert M. Brownson and Henry M. Campbell, both of Detroit, Mich., for appellant. Clark, Lockwood, Bryant & Klein, of Detroit, Mich., for appellee.

PER CURIAM. Dismissed pursuant to stipulation.

UNITED STATES ex rel. UNITED IRON WORKS CO. et al. v. LUYSTER, et al. (Circuit Court of Appeals, Eighth Circuit. May 3, 1915.) No. 4254. In Error to the District Court of the United States for the Western District of Oklahoma. C. G. Horner, of Guthrie, Okl., and J. L. Hornsby, of St. Louis, Mo., for plaintiffs in error. William F. Robertson, of Dallas, Tex., and John Devereux, of Oklahoma City, Okl., for defendants in error.

PER CURIAM. Reversed, with costs, and remanded for further proceedings on authority of opinion of Supreme Court, in U. S., for Use, etc., of Alex. Bryant Co. v. N. Y. Steam Fitting Co., 235 U. S. 327, 35 Sup. Ct. 108, 59 L. Ed. 253.

WATTS v. WESTON et al. (Circuit Court of Appeals, Second Circuit. November 16, 1915.) In Error to the District Court of the United States for the Southern District of New York. Before LACOMBE, COXE, and ROGERS, Circuit Judges.

PER CURIAM. We have too much doubt as to the right of the plaintiff as executrix of the last will and testament of James R. Watts, deceased, to appeal, and of her chance of final success, to warrant the granting of the motion allowing her to appear in forma pauperis, after so long a delay.

WILSON et al. v. UNITED STATES. (Circuit Court of Appeals, Eighth Circuit. September 27, 1915.) No. 4571. In Error to the District Court of the United States for the Western District of Oklahoma. John W. Choate, of Oklahoma City, Okl., for plaintiffs in error. John A. Fain, U. S. Atty., of Oklahoma City, Okl.

PER CURIAM. Docketed and dismissed, without costs to either party in this court, on motion of defendant in error, and with consent of plaintiffs in error.

YOST v. DALLAS COUNTY. (Circuit Court of Appeals, Eighth Circuit. May 18, 1915. Rehearing Denied August 23, 1915.) No. 4186. Appeal from the District Court of the United States for the Western District of Missouri. Harry J. Cantwell, of St. Louis, Mo., for appellant. J. W. Miller and John S. Haymes, both of Buffalo, Mo., for appellee.

PER CURIAM. Decree of District Court affirmed, on authority of mandate of Supreme Court on questions certified. See, also, 219 Fed. 1023, 134 C. C. A. 666.

END OF CASES IN VOL. 227

*