IS 7285-2 (2004): Refillable Seamless Steel Gas Cylinders, Part 2: Quenched and Tempered Steel Cylinders with Tensile Strength Less Than 1 100 MPa (112 kgf/mm2) [MED 16: Mechanical Engineering]

IS 7285 (Part 2) : 2004
(Reaffirmed 2010)

भारतीय मानक

फिर से भरे जा सकने वाले जोड़ रहित इस्पात के गैस सिलेन्डर—विशिष्टि

भाग 2 1100 एमपीए (112 केजीएफ/वर्ग एमएम) से कम की नन्यता सामर्थ्य वाले इस्पात के क्वेंच्ड और टैम्पर सिलेन्डर

(तीसरा पुनरीक्षण)

Indian Standard

REFILLABLE SEAMLESS STEEL GAS CYLINDERS — SPECIFICATION

PART 2 QUENCHED AND TEMPERED STEEL CYLINDERS WITH TENSILE STRENGTH LESS THAN 1100 MPa (112 kgf/mm^2)

(Third Revision)

ICS 23.020.30

BUREAU OF INDIAN STANDARDS
MANAK BHAVAN, 9 BAHADUR SHAH ZAFAR MARG
NEW DELHI 110002

June 2004 Price Group 11

FOREWORD

This Indian Standard (Part 2) (Third Revision) was adopted by the Bureau of Indian Standards, after the draft finalized by the Gas Cylinders Sectional Committee had been approved by the Mechanical Engineering Division Council.

This revised standard is mainly derived from the ISO 9809-1 : 1999 'Gas Cylinder — Refillable seamless steel gas cylinders — Design, construction and testing — Part 1: Quenched and tempered steel cylinders with tensile strength less than 1 100 MPa'. However, considering the prevailing practices in the country, necessary additions are made wherever necessary. Assistance has also been taken from:

ISO 11114-1 : 1997 Transportable gas cylinders — Compatibility of cylinder and valve materials with gas contents — Part 1 : Metallic materials

ISO 13769 : 2002 Gas cylinders — Stamp-marking

While implementing this standard, the manufacturer and the inspection agency shall ensure compliance with statutory regulations.

The purpose of this standard is to provide a specification for the design, manufacture, inspection and testing of a cylinder for worldwide usage. The objective is to balance design and economic efficiency against international acceptance and universal utility.

This standard will, together with Part 1 in the future replace IS 7285 : 1988 'Specification for seamless steel cylinders for permanent and high pressure liquefiable gases'. Normalized steel cylinders covered in IS 7285 (Part 1): 2004. Cylinders for on-board storage of compressed natural gas (CNG) as fuel for automobile vehicles application covered in IS 15490 : 2004.

The composition of the Committee responsible for the formulation of this standard is given in Annex E.

For the purpose of deciding whether a particular requirement of this standard is complied with, the final value, observed or calculated, expressing the result of a test or analysis, shall be rounded off in accordance with IS 2 : 1960 'Rules for rounding off numerical values *(revised)'.* The number of significant places retained in the rounded off value should be the same as that of the specified value in this standard.

AMENDMENT NO. 3 NOVEMBER 2011
TO
IS 7285 (PART 2) : 2004 REFILLABLE SEAMLESS STEEL GAS CYLINDERS — SPECIFICATION

PART 2 QUENCHED AND TEMPERED STEEL CYLINDERS WITH TENSILE STRENGTH LESS THAN 1 100 MPa (112 kgf/mm^2)

*(**Third Revision**)*

(*Page* 13, *clause* **14.3.1)** — Substitute the following for the existing:

'14.3.1 *Export Market/Defense Services*

Cylinders manufactured for export/defense services use, shall be painted externally as agreed to between the purchaser and the manufacturer.'

(ME 16)

Reprography Unit, BIS, New Delhi, India

AMENDMENT NO. 2 NOVEMBER 2009
TO
IS 7285 (PART 2) : 2004 REFILLABLE SEAMLESS STEEL GAS CYLINDERS — SPECIFICATION

PART 2 QUENCHED AND TEMPERED STEEL CYLINDERS WITH TENSILE STRENGTH LESS THAN 1 100 MPa (112 kgf/mm^3)

(Third Revision)

(Page 9, *clause* 9.2.4) Insert the following clauses after 9.3.4:

9.2.5 *Sulphide Stress Cracking Resistance Test* — If the tipper limit of the specified tensile strength for the steel exceeds 950 MPa, the steel from a finished cylinder shall be subjected to a sulphide stress cracking test in accordance with 9.2.5.1 and meer the requirements listed therein.

9.2.5.1 *Sulphide stress cracking test for steel* - Tests shall be conducted on a minimum of three tensile specimens with a gauge diameter of 3.81 mm machined from the wall of a finished cylinder the specimens shall be placed under a constant tensile load equal to 60 percent of the specified minimum yield strength of the steel, immersed in a solution of distilled water buffered with 0.5 percent (mass fraction) sodium acetrate trihydrate and adjusted to an initial *p*H of 4.0 using acetic acid. The solution shall be continuously saturated at room temperature and pressure with 0.414 kPa hydrogen sulphide (balance nitrogen). The tested specimens shall not fail within test duration of 144 h. Specimens that fails outside gauge are considered as invalid test.

NOTES

1. This is a test for type of material, duly heat treated, and results can be used for any cylinders from that material, with same heat treatment and applicable only for cylinders for CNG, Methane and Hydrane gases.

2. For guidance Method — A NACE Standard tensile test procedure, as described in NACE Standard TM01 77-96 may be referred.

(ME 16)

Reprography Unit, BIS, New Delhi, India

AMENDMENT NO. 1 MARCH 2007
TO
IS 7285 (PART 2): 2004 REF1LLABLE SEAMLESS STEEL GAS CYLINDERS — SPECIFICATION

PART 2 QUENCHED AND TEMPERED STEEL CYLINDERS WITH TENSILE STRENGTH LESS THAN 1 100MPa (112 kgf/mm^2)

(Third Revision)

(Page 1, *clause* **1**, *line* 7) — Delete the word 'worldwide'.

(Page 1, *clause* **1**, *line* 8) — Substitute '-20°C' *for* '-50'.

(Page 1, *clause* **3.1**) — Substitute '$R_{p0.2}$' *for* 'R_P'.

(Page 4, *Table* 2, *col* 3 *and* 4) — Substitute **'Rm < 950 MPa'** *for* '< **950 MPa'** and **'Rm ≥ 950 MPa'** *for* '≥ **950 MPa'.**

(*Page* 4, *clause* **6.3.1,** *Definitions)* — Substitute the following definitions below the formula for the existing:

'f = maximum allowable wall stress at hydrostatic test pressure, in kgf/mm^2;
= 5/6 R_e, R_e being the minimum value of the yield strength in kgf/mm^2;
D_0 = nominal outside diameter of the cylinder, in mm;
D_1 = nominal inside diameter of cylinder, in mm;
a = calculated minimum wall thickness of cylindrical shell, in mm, excluding additional allowances to resist influences other than those of internal pressure and of external forces due to normal handling; and
P_h = hydrostatic test pressure above atmospheric, in kgf/cm^2 (5/3 × working pressure).'

(Page 5, *clause* **6.4.1,** *lines* 4 *and* 5) — Substitute the following for the existing:

'$b \geq 1.5\ a$' for $0.5 > H/D_o \geq 0.25$
$b \geq 2a$' for $0.25 > H/D_o \geq 0.2$'

(*Page* 5, *clause* **6.4.1,** *line* 8) — Substitute *'D_o' for 'D'.*

(Page 5, *clause* **6.4.2**, *para* 2) — Substitute the following for the existing para:

'The wall thickness of the end will be acceptable, if it is nowhere less than the value t_e when calculated with the formula:

$$t_e = a \times F'$$

(Page 6, *clause* **6.9**) — Substitute the following for the existing:

'A fully dimensional drawing shall be prepared which includes the specification of the material and neck threads, permanent fitting and minimum possible service temperature - 20°C.'

(Page 6, *clause* **7.4**, *para* 2, *line* 1) — Substitute 'embrittling' *for* 'embritting'.

(Page 6, *clause* **7.4**, *para* 2, *line* 7) — Substitute 'cylindricar' *for* 'cylinder'.

(Page 11, *clause* **10.5.3,** *line* 14) — Substitute '1.2 × test pressure *(P_h)*' *for* '1/F × 1.18 working pressure *(P_h)'.*

[*Page* 12, *clause* **13(a)** *and* (j)] — Substitute the following for the existing:

'a) Serial number, identification of manufacturer and year of manufacture;

j) Filling pressure in bar or kgf/cm^2 at 15°C in case of permanent gases and filling ratio in case of high pressure liquefiable gases.'

(Page 13, *clause* **16**) — Substitute the following for the existing matter:

'Before being despatched from the manufacturer's works, all cylinder shall be thoroughly cleaned and all particles of grit, fillings or other matter which may have collected inside the cylinder in the course of manufacture, heat treatment and testing shall be removed completely and the cylinder dried internally by heating uniformly to a temperature not exceeding 300°C. Cylinders not immediately closed by fitting of a valve and safety devices if applicable, shall have plugs, which prevent entry of moisture and protect threads, fitted to all

openings. The outside surface of the cylinder shall be given a suitable protective coating before despatch.'

(*Page* 16, *Fig.* 6) — Substitute the following for the existing figure:

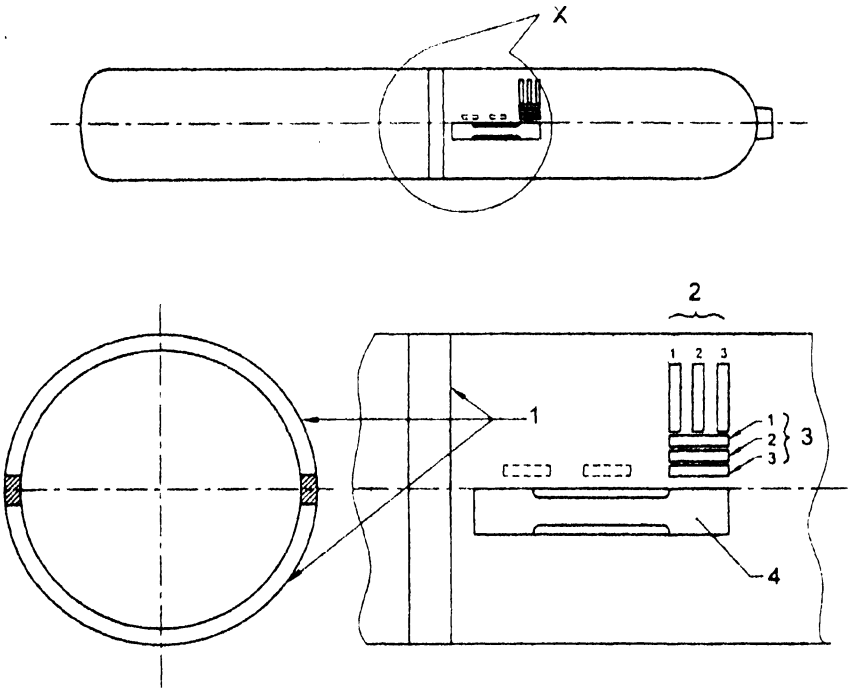

ENLARGED DETAIL AT X

KEY

1. BEND TEST PIECES
2. TRANSVERSE IMPACT TEST PLECES
3. LONGITUDINAL IMPACT TEST PLECES
   (AITERNATIVE POSITIONS SHOWN DOTTED)
4. TENSILE TEST PLECES

FIG. 6 TYPICAL LOCATION OF TEST PIECES

Amend No. 1 to IS 7285 (Part 2) : 2004

(Page 20, *Table 6, col* 3) — Delete symbols '1)' and '2)' from the text.

(Page 21, *Table* 6) — Delete footnotes 1) and 2) given under the table.

(ME 16)

Reprography Unit, BIS, New Delhi, India

Indian Standard

REFILLABLE SEAMLESS STEEL GAS CYLINDERS-SPECIFICATION

PART 2 QUENCHED AND TEMPERED STEEL CYLINDERS WITH TENSILE STRENGTH LESS THAN 1 100 MPa (112 kgf/mm^2)

(Third Revision)

1 SCOPE

This standard (Part 2) sets out minimum requirements for the material, design, construction and workmanship, manufacturing processes and tests at manufacture of refillable quenched and tempered seamless steel gas cylinders of water capacities from 0.5 litre up to and including 400 litres for compressed, liquefied and dissolved gases exposed to extreme worldwide ambient temperatures (normally between -50 and +65°C). this part is applicable to cylinders with a maximum tensile strength R_m of less than 1 100 MPa (112 kgf/mm^2).

NOTES

1 It so desired, cylinders of water capacity less than 0 5 litre may be manufactured and certified to this standard

2 If so desired, cylinders of water capacity exceeding 400 litres may be manufactured and certified to this standard The number of cylinders to be subjected to pressure cycling test, and sampling method for mechanical tests shall be decided in consultation with the statutory authority

2 REFERENCES

The standards listed below contain provisions which through reference in this text, constitute provisions of this standard. At the time of publication, editions indicated were valid. All standards are subject to revision and parties to agreements based on this standard are encouraged to investigate possibility of applying the most recent editions of the standards indicated below:

IS No.	*Title*
1500 : 1983	Method for Brincll hardness test for metallic materials *(second revision)*
1586 : 2000	Method for Rockwell hardness test for metallic materials (Scales A-B-C-D-E-F-G-H-K 15N, 30N, 45N; 15T, 30T and 45T) *(third revision)*
1608 : 1905	Mechanical testing of metals Tensile testing *(second revision)*
1757: 1988	Method for Charpy impact test (V-notch) for metallic materials *(second revision)*
3224 : 2002	Valve fittings for compressed gas cylinders excluding liquefied petroleum gas (LPG) cylinders — Specification *(second revision)*
3745: 1978	Specification for yoke type valve for small medical gas cylinders *(first revision)*
3933 : 1966	Colour identification of gas cylinders and related equipment intended for medical use
4258 : 1982	Hardness conversion tables for metallic materials *(first revision)*
4379: 1981	Identification of the contents of industrial gas cylinder *(first revision)*
5844 : 1970	Recommendations for hydrostatic stretch testing of compressed gas cylinders
7241 : 1981	Glossary of terms used in gas cylinder technology *(first revision)*

3 TERMINOLOGY

In addition to the definitions given in IS 7241, the following definitions shall apply.

3.1 Yield Stress (R_e) — Value corresponding to the upper yield stress, R_e or, for steels that do not exhibit a defined yield, the 0.2 percent proof stress (non-proportional elongation), R_p.

3.2 Quenching — Hardening heat treatment in which a cylinder, which has been heated to a uniform temperature above the upper critical point Ac_v of the steel, is cooled rapidly in a suitable medium.

3.3 Tempering — Softening heat treatment which follows quenching, in which the cylinder is heated to a uniform temperature below the lower critical point, AC_1, of the steel.

3.4 Batch — A quantity of up to 200 cylinders plus cylinders for destructive testing of the same nominal diameter, thickness and design, made successively from the same steel and subjected to the same heat treatment for the same duration of time.

3.5 Working Pressure (P_w)/Serviee Pressure — Working pressure for permanent gas means the internal

pressure of the gas in the cylinders at a temperature of 15°C.

3.6 Test Pressure *(P_h)* — Test pressure means the internal pressure required for the hydrostatic test or the hydrostatic stretch test of the cylinders.

NOTE – It is used for cylinder wall thickness calculation.

3.7 Burst Pressure *(P_b)* — Highest pressure reached in a cylinder during burst test.

4 SYMBOLS

a = calculated minimum thickness, in millimetre, of the cylindrical shell;

a' = guaranteed minimum thickness, in millimetre, of the cylindrical shell (*see* Fig. 1);

a_1 = guaranteed minimum thickness, in millimetre, of a concave base at the knuckle (*see* Fig. 4);

a_2 = guaranteed minimum thickness, in millimetre, at the centre of a concave base (*see* Fig. 4);

A = percentage elongation on gauge length $5.65 \sqrt{S_o}$;

b = guaranteed minimum thickness, in millimetre at the centre of a convex base (*see* Fig. 1);

d_2 = maximum permissible deviation of burst profile, in millimetre (*see* Fig. 11 and Fig. 12);

D_o = nominal outside diameter of the cylinder, in millimetre (*see* Fig. 1);

D_1 nominal inside diametre of the cylinder, in millimetre;

D_y = diameter, in millimetre of former (*see* Fig. 9);

h = outside depth (concave base end), in millimetre (*see* Fig. 4);

H = outside height, in millimetre, of domed part (convex head or base end) (*see* Fig. 1);

l = length of cylindrical part of the cylinder, in millimetre (*see* Fig. 5);

L_o original gauge length, in millimetre;

n = ratio of the diameter of the bend test former to actual thickness of test piece (t);

P_b = measured burst pressure, in bar or kgf/cm^2;

P_h = hydraulic test pressure, in bar or kgf/cm^2, above atmospheric pressure;

P_w = working pressure, in bar or kgf/cm^2, above atmospheric pressure;

P = observed pressure when cylinder starts yielding during hydraulic bursting test, in bar or kgf/cm^2;

r = inside knuckle radius, in millimetre (*see* Fig. 1 and Fig. 4);

R_e = minimum guaranteed value of yield stress (*see* **3.1**), in MPa or kgf/mm^2;

R_{ea} = actual value of the yield stress, in MPa or kgf/mm^2, as determined by the tensile test (*see* **10.2);**

R_g = minimum guaranteed value of tensile strength, in MPa or kgf/mm^2;

R_m = actual value of tensile strength, in MPa or kgf/mm^2 as determined by the tensile test (*see* **10.2**);

S_o = original cross-sectional area of tensile test piece, in square millimetre according to IS 1608;

t = actual thickness of the test specimen, in millimetre;

u = ratio of distance between knife edges or platens in the flattening test to average cylinder wall thickness at the position of test;

V = water capacity of cylinder, in litres; and

w = width, in millimetre, of the tensile test piece.

NOTE — 1 bar = 10^5 Pa = 0 1 N/mm^2 (1 kgf/mm^2 = 9.806 65 MPa).

5 MATERIALS

5.1 General Requirements

5.1.1 The steel used shall be such that its properties met the requirements of the finished product. The steel shall be aluminium or silicon killed with non-aging properties, other than rimming qualities. The chemical composition of all steels shall be declared and defined at least by:

a) Carbon, manganese and silicon content in all, and

b) Chromium, nickel, molybdenum, vanadium and that of any other alloying elements intentionally added.

NOTES

1 When aluminium or a combination of aluminium and silicon is used for killing the steel, the requirements regarding minimum silicon content does not apply.

2 When steel is aluminium-killed nitrogen content shall be limited to 0.01 percent.

3 When steel is aluminium killed by aluminium alone, nitrogen content is limited to 0.007 percent.

4 In case of chromium molybdenum steel with nickel, its value shall be nickel 2 30-2.80. molybdenum 0.40-0.70 and chromium 0.50-0.80.

5.1.2 The cylinder manufacturer shall establish means to identify the cylinders with the cast of steel from which they are made.

5.1.3 Grades of steel used for cylinder manufacture shall be compatible with the intended gas service, for example, corrosive gases, embrittling gases.

5.2 Controls on Chemical Composition

5.2.1 The chemical composition of all steels shall be defined at least by:

a) Carbon, manganese and silicon contents in all cases;

b) Chromium, nickel and molybdenum contents or other alloying elements intentionally added to the steel;

c) Maximum sulphur and phosphorus contents in all cases.

The carbon, manganese and silicon contents and, where appropriate, the chromium, nickel and molybdenum contents shall be given, with tolerances, such that the differences between the maximum and minimum values of the cast do not exceed the values specified in Table 1.

The maximum permissible deviation of each element is not required to be centered on the nominal content.

The combined content of the elements like vanadium, niobium, titanium, boron and zirconium, shall not exceed 0.15 percent.

The actual content of any element deliberately added shall be reported and their maximum content shall be representative of good steel making practice.

5.2.2 Sulphur and phosphorus in the cast analysis of material used for the manufacture of gas cylinders shall not exceed the values specified in Table 2.

5.2.3 The cylinder manufacturer shall obtain and provide certificates of cast (heat) analysis of the steels supplied for the construction of gas cylinders.

Should check analysis be required, they shall be carried out cither on specimens taken during manufacture from the material in the form as supplied by the steel-maker to the cylinder manufacturer, or from finished cylinders. In any check analysis, the maximum permissible deviation from the limits specified for the cast analyses shall conform to the values specified in Table 1.

5.3 Typical Steels

Two typical nationally/internationally recognized steel types which have provided safe performance over many years are:

a) Chromium molybdenum steel (quenched and tempered); and

b) Carbon manganese steel (quenched and tempered).

The chemical compositions of these steels, subject to the controls specified in **5.2.1** are given in Table 3.

5.4 Suitable steels other than given in Table 3 may be used with the prior permission of the statutory authority. In such a case, the yield strength of the steel taken for the purpose of calculating the wall thickness of the cylinder shall not be greater than the minimum specified value.

5.5 Heat Treatment

The cylinder manufacturer shall certify the heat treatment process applied to the finished cylinders.

Quenching in any media other than mineral oil is permissible provided that the method produces cylinders free of cracks. If the rate of cooling in the medium is greater than 80 percent of that in water at 20°C without additives, every produced cylinder shall be subjected to method of non-destructive testing.

The tempering process shall achieve the required mechanical properties. The actual temperature to which a type of steel is subjected for a given tensile strength shall not deviate by more than 30°C from the temperature specified by the cylinder manufacturer.

6 DESIGN

6.1 General Requirements

6.1.1 The calculation of the wall thickness of the pressure containing parts shall be related to the guaranteed minimum yield stress *(R_e)* of the material.

Table 1 Chemical Composition Tolerances

(*Clauses* 5.2.1 *and* 5.2.3)

Sl No.	Element	Maximum Content in Percentage	Maximum Permissible Deviations in Percentage
(1)	(2)	(3)	(4)
i)	Carbon	< 0.30 ≥ 0.30	0.06 0.07
ii)	Manganese	All values	0.30
iii)	Silicon	All values	0.30
iv)	Chromium	< 1.50 > 1 50	0.30 0.50
v)	Nickel	All values	0.40
vi)	Molybdenum	All values	0.15

Table 2 Maximum Sulphur and Phosphorus Limits in Percentage

(Clause 5.2.2)

Sl No.	Element	< 950 MPa	≥ 950 MPa
(1)	(2)	(3)	(4)
i)	Sulphur	0.020	0.010
ii)	Phosphorus	0.020	0.020
iii)	Sulphur + Phosphorus	0.030	0.025

Table 3 Internationally Recognized Steel Compositions

(Clause 5.3)

Sl No.	Element	Steel Grade and Conditions (in Percentage)	
		Cr Mo (Q & T)	C Mn (Q & T)
(1)	(2)	(3)	(4)
i)	Carbon	0.25-0.38	0.38, *Max*
ii)	Silicon	0.1-0.4	0.1-0.35
iii)	Manganese	0.4-1.0	1.35-1.70
iv)	Phosphorus	0.02, *Max*	0.02, *Max*
v)	Sulphur	0.02, *Max*	0.02, *Max*
vi)	Chromium	0.8-1.2	-
vii)	Molybdenum	0.15-0.40	-

6.1.2 For calculation purposes, the value of R_e shall not exceed 0.85 R_g.

6.1.3 The internal pressure upon which the calculation of wall thickness is based shall be the hydraulic test pressure (P_n).

6.2 Limitation on Tensile Strength

6.2.1 Where there is no risk of hydrogen embrittlement the maximum value of the tensile strength is limited by the ability of the steel to pass the requirements of **9** and **10,** but in no case shall the actual maximum tensile strength R_m exceed 1 100 MPa for chrome-molybdenum steel or 1 030 MPa for carbon manganese steels.

6.2.2 Where there is a risk of hydrogen embrittlement the maximum value of the tensile strength as determined as per **10.2** shall either be 880 MPa or, where the ratio R_{ea}: R_m does not exceed 0.9, shall be 950 MPa. The hardness obtained on each cylinder shall be within the band related to the range of declared values of tensile strength.

6.3 Calculation of Cylindrical Shell Thickness

6.3.1 The wall thickness of the cylindrical shell of the cylinder may be calculated by following formulae:

$$f = \frac{P_h\,(1.3\,D_o^2 + 0.4\,D_i^2)}{100\,(D_o^2 - D_i^2)} \quad \text{... (1)}$$

$$a \geq D_o / 250 + 1 \quad \text{... (2)}$$

with absolute minimum of a = 1.5 mm

where

f = maximum allowable wall stress at hydrostatic test pressure, in kgf/cm^2;

= 5/6 R_e, R_e being the minimum value of the yield strength in kgf/mm^2;

D_o = outer diameter of cylinder, in mm;

D_1 = inner diameter of cylinder, in mm;

a = calculated minimum wall thickness of cylindrical shell in mm, excluding additional allowances to resist influences other than those of internal pressure and of external forces due to normal handling; and

P_h = hydrostatic test pressure above atmospheric, in kgf/cm^2 (5/3 × working pressure).

NOTES

1 In case of liquefiable gases, $P_h \geq$ 1.5 × developed pressure at 65°C (for the filling ratio under consideration)

2 For dissolved acetylene $P_h \geq$ 60 kgf/cm^2.

3 The value of R_e itself is limited to 85 percent of the minimum value of the tensile strength of the material.

6.3.2 The value of the wall thickness as calculated from above formula shall, however, be not less than $0.136 \sqrt{D_o}$.

6.4 Calculation of Convex Ends (Heads and Bases)

6.4.1 The thickness, *b,* at the centre of a convex end shall not be less than that required by the following criteria:

$$b \geq 1.5\ a \text{ for } 0.5 \geq H/D_o \geq 0.25$$

$$b \geq 2\ a \text{ for } 0.25 \geq H/D_o \geq 0.2$$

where the inside knuckle radius, *r,* is not less than $0.075\ D_o$.

NOTE - - $H/D \leq 0.20$ is not recommended.

In order to obtain a satisfactory stress distribution in the region where the end joins the shell, any thickening of the end that may be required shall be gradual from the point of juncture. For the application of this rule the point of juncture between the shell and the end is defined by the horizontal line indicating dimension *H* in Fig. 1.

6.4.2 Nevertheless, if the shape of the convex end is such that the following conditions are fulfilled:

$$R \leq D_o$$

$$r \geq 0.1\ D_o$$

where

R = inside dishing radius, in millimetre; and

r = inside knuckle radius, in millimetre *(see* Fig. 1).

The wall thickness of the end will be acceptable, if it is nowhere less than the value t_o when calculated with the formula:

$$t_e = a \times F$$

where *F* is a shape factor, the value of which depends on the value of H/D_o and if $H/D_o \leq 0.25$, and also on t_e/D_o, *H* being the outside height of the domed part of the convex end.

For wall thickness up to and including 5 mm, the value of *F* shall be obtained from Fig, 2 and Fig. 3. For calculation purpose the value of R_e is limited to a maximum of 0.75 times the minimum specified tensile strength.

6.4.3 The outside height *H* mentioned at **6.4.2** is the distance from the plane of the cross-section at the extreme limit of the cylindrical part of the cylinder to the farthest point of the centre of the connecting former end. For the application of this rule:

a) The cylindrical part of the cylinder includes any portion with slight deviations of the geometrical cylindrical shape, such as more or less conical wall inside or outside or at both surfaces, reduction in diameter for a foot-ring, etc; and

b) The top of the cylinder bearing the valve shall be without extrusion and without hole in the centre *(see* Fig. 1).

6.5 Calculation of Concave Base Ends

When concave base ends *(see* Fig. 4) are used the following design values are recommended:

$$a_1 \geq 2\ a'$$

$$a_2 \geq 2\ a'$$

$$h \geq 0.10\ D_o$$

$$r \geq 0.075\ D_o$$

The design drawing shall at least show values for a_1, a_2, *h* and *r*.

6.5.1 In order to obtain a satisfactory stress distribution, the thickness of the cylinder wall shall increase progressively in the transition region between the cylindrical part and the base.

The cylinder manufacturer shall in any case prove by pressure cycling test as given in **9.2.3** that the design is satisfactory.

6.6 Neck Design

6.6.1 The external diameter and thickness of the neck end of the cylinder shall be adequate for the torque applied in fitting the valve to the cylinder. The torque may vary according to the diameter of thread, the form of thread and the sealant used in the fitting of the valve (for guidance on torque, *see* IS 3224 and IS 3745).

6.6.2 In establishing the minimum thickness, consideration shall be given to obtain a thickness of wall in the cylinder neck which will prevent permanent expansion of the neck during the initial and subsequent fittings of the valve into the cylinder without support of an attachment such as a neck ring. Where the cylinder is specifically designed to be fitted with such reinforcement, such as neck ring, or shrunk-on collar, the same shall be taken into account.

6.6.3 *Valve Fittings*

The cylinder neck shall be threaded to suit the type of valves as given in IS 3224 or any other specification as approved by the statutory authority. The threads shall be full form, clean cut even and without chatter, answering to gauges, and concentric with the axis of the cylinder.

6.7 Foot-Rings

When a foot-ring is provided, it shall be sufficiently strong and made of material compatible with that of the cylinder. The shape should preferably be cylindrical and shall give the cylinder sufficient stability. The foot-

ring shall be secured to the cylinder by a method other than welding, brazing or soldering. Any gaps, which may form water traps, shall be sealed by a method other than welding, brazing or soldering.

6.8 Neck Rings

6.8.1 The valve shall be protected against damage by the provision of a short metal cap of thickness not less than 2.5 mm. Cylinders for non-toxic gases, of nominal water capacity up to 5 litres shall be exempted from this provision. Cylinders for non-toxic gases of nominal water capacity above 5 litres and up to 10.5 litres may not be provided with valve protection cap, if approved by the statutory authority. The cap shall be of such a shape that it is no where in actual contact with any part of the valve or the valve body. The cap shall be provided with vents of adequate size so as to avoid any gas of pressure accumulation inside cap in case of leak. However, in case of toxic gases, the cap shall be gas tight, capable of withstanding maximum developed pressure of contained gas at 65°C. For non-toxic gas the cap may be replaced by guard.

6.8.2 When a neck ring is provided, it shall be sufficiently strong and made of material compatible with that of the cylinder and shall be securely attached by a method other than welding, brazing or soldering.

The manufacturer shall ensure that the torque to turn the neck ring is greater than 100 Nm.

6.9 Design Drawing

A full dimensioned drawing shall be prepared which includes the specification of the material, and neck threads.

7 MANUFACTURE

7.1 General

The cylinder shall be produced by any one of the following methods:

a) Forging or drop forging from a solid ingot or billet;
b) Manufacturing from seamless tube (hot/cold finish, flow formed);
c) Pressing from a flat plate;
d) Closing of the open ends may be done by any hot working processes, such as, spinning, forging, etc; and
e) Cylinders may be designed with one or two openings along the central cylinder axis. Metal shall not be added in the process of closure of the end. Plugging to correct manufacturing defects in cylinder bases is not permitted.

7.2 Wall Thickness

During production each cylinder or semi-finished shell shall be examined for thickness. The wall thickness at any point shall not be less than the minimum thickness specified.

If required by the purchaser, suitable allowances to cover corrosion, manufacturing tolerances stresses due to horizontal acceleration and retardation during transportation may also be provided. The amount of this allowance shall be as agreed to between the manufacturer and the purchaser.

7.3 Surface Defects

The internal and external surfaces of the Finished cylinder shall be free from defects which would adversely affect the safe working of the cylinder. *See* Annex A for examples of defects and guidance on their evaluation.

7.4 Ultrasonic Examination

Each cylinder shall be ultrasonically examined for defects in accordance with Annex B except for cylinder made from carbon manganese steel having diameter up to 300 mm or working pressure up to 160 kgf/cm^2.

Examination of cylinders to be used for embritting gases, such as, methane, hydrogen and carbon monoxide shall be carried out after heat treatment. For cylinders containing other gases, examination may be carried out either during or at the completion of manufacture. However the ultra-sonic examination shall be performed on the cylinder part after the final wall thickness has been achieved except for small cylinders with a cylindrical length of less than 200 mm or where the product of $P_w \times V < 400$ (for $R_m \geq 650$ MPa) or $P_w \times V < 800$ (for $R_m < 650$ MPa) the ultrasonic test is not necessary.

7.5 Out-of-Roundness

The out-of-roundness of the cylindrical shell that is the difference between the maximum and minimum outside diameters at the same cross-section shall not exceed 2 percent of the mean of these diameters.

7.6 Mean Diameter

The mean external diameter of the cylindrical part outside the transition zones on a cross-section shall not deviate more than ±1 percent from the nominal design diameter.

7.7 Straightness

The maximum deviation of the cylindrical part of the shell from a straight line shall not exceed 3 mm/m length (*see* Fig. 5).

7.8 Verticality

Deviation from vertical shall not exceed 10 mm/m length *(see* Fig. 5).

7.9 Stability

The outer diameter of the surface in contact with the ground shall be greater than 65 percent of the nominal outside diameter of the cylinder.

7.10 Testing Requirements

The material of the finished cylinder shall satisfy the requirements given in **9** (type approval procedure), **10** (batch test) and **11** (test on every cylinder).

7.10.1 *Re-test*

In the event of failure to meet the test requirement in hardness testing individual cylinder shall be hardened and tempered to meet the specific requirement. It shall continue to be part of original batch unless the repeat heat treatment temperature differs by more than 30°C from the first heat treatment.

In case of failure in carrying out the batch testing as given in **10,** the following re-testing procedures shall be followed:

7.10.1.1 If the sample fails in any of the test specified in **10.2, 10.3** and **10.4** and if the inspecting authority is considered that failure was due to an error in carrying out the test, a fresh test shall be made on a test piece taken from the same cylinder. The defective test shall be ignored but, otherwise, at the cylinder makers' discretion, one of the following procedures shall be adopted:

a) The test in which the failure occurred shall be repeated on the cylinder or test ring originally tested and, in addition, the test specified in **10.2, 10.3** and **10.4** shall be carried out on another cylinder or test rings from the same batch of the cylinders. If both test rings comply with the test requirements of **10.2, 10.3** and **10.4** the batch may be accepted.

b) The batch may be re-heat-treated as given in **5.5** and the tests specified in **10.2, 10.3** and **10.4** shall be carried out on two cylinders or test rings at the discretion of inspecting authority, which have not been previously tested. If all the cylinders or all test rings satisfy the test requirements, the batch may be accepted.

7.10.2 If any of the tests specified in **10.2, 10.3** and **10.4** fail, the batch may be re-heat-treated as given in **7.10** and re-tested as given in **7.10.1.1** (b). If all cylinders or all test rings satisfy the test requirements, the batch may be accepted.

7.10.3 No cylinder shall, however, be re-heat-treated more than three times. Also, if more than five cylinders in a batch are re-heat-treated, they shall constitute a new batch for the purposes of **10.2, 10.3** and **10.4.**

7.10.4 Not more than five cylinders or test rings from batch shall be submitted to the test and the limitations on re-heat-treatment given in **7.10.3** shall be complied with.

7.10.5 If after the permitted number of re-tests and re-heat-treatments the tests requirements have not been complied with, the cylinders in the batch shall be rendered unserviceable for holding the gas under pressure.

7.10.6 *Failure in Mechanical Properties*

Cylinders which have been rejected for not fully satisfying the mechanical properties of steel may be re-heat-treated and re-offered for inspection. Each cylinder shall pass all prescribed tests.

7.10.7 If a cylinder fails due to any one of the following reasons:

a) Non-compliance of the requirements of hydraulic test under **11.2**, and

b) Non-compliance of the requirements of hydraulic bursting test under **10.5.**

No further cylinder shall be accepted from the manufacturer until it has been demonstrated to the satisfaction of the inspecting authority that the cause of the failure has been identified and corrected. No cylinder from the batch in which the cylinder failed shall be accepted by the inspecting authority unless it has been demonstrated to the inspecting authority that each of such cylinders is free from the defect which caused the failure. Any cylinder not accepted by the inspecting authority shall be rendered unserviceable for holding gas under pressure.

7.11 Water Capacity

The manufacturer shall check and record the water capacity of each cylinder in order to ensure compliance as following tolerance:

a) For cylinders of water capacity up to and including 20 litres = $^{+10}_{-0}$ percent

subject to a maximum of 1 litre; and

b) For cylinders of water capacity exceeding 20 litres = $^{+5}_{-0}$ percent.

8 INSPECTION AND TESTING

In order to ensure that the cylinders are in compliance with this standard, they shall be subject to inspection and testing in accordance with 9 (type approval procedure), **10** (batch test) and **11** (test on every cylinder) by an authorized inspection body (hereafter referred to as 'the inspector') recognized by the statutory authority. The inspector shall be competent for inspection of cylinders.

9 TYPE APPROVAL PROCEDURE

9.1 General Requirement

A technical specification of each new design of cylinder [or cylinder family as given in **9.1** (f)] including design drawing, design calculations, steel details and heat treatment, shall be submitted by the manufacturer to the inspector for scrutiny and further recommendation to statutory authority. The tests detailed in **9.2** shall be carried out on each new design under the supervision of the inspector.

A cylinder shall be considered to be of a new design, compared with an existing approved design, when:

a) It is manufactured in a different factory; or

b) It is manufactured by a different process *(see* **7.1**); or

c) It is manufactured from a steel of different specified chemical composition range as defined in **5.2.1;** or

d) It is given a different heat treatment beyond the limits stipulated in **5.5**; or

e) Base or the base/neck profile has changed, that is, concave, convex, hemispherical or also if there is a change in base thickness/cylinder diameter ratio; or

f) Overall length of the cylinder has increased by more than 50 percent (cylinders with a length: diameter ratio less than 3 shall not be used as reference cylinders for any new design with this ratio greater than 3); or

g) Nominal outside diameter has changed; or

h) Design wall thickness has changed; or

j) Hydraulic test pressure has been increased (where a cylinder is to be used for lower pressure duty than that for which design approval has been given, it shall not be deemed to be a new design); or

k) Guaranteed minimum yield stress *(R_e)* and/or the guaranteed minimum tensile strength (R_g) have changed.

9.2 Prototype Tests

9.2.1 A minimum of 50 cylinders which are guaranteed by the manufacturer to be representative of the new design shall be made available for prototype testing. However, if for special applications the total number of cylinders including, test cylinders required is less than 50. enough cylinders shall be made to complete the prototype tests required, in addition to the production quantity.

9.2.2 In the course of the type approval process, the inspector shall select the necessary cylinders for testing and

a) Verify that:

1) Design conforms to the requirements of **6**;

2) Thickness of the wall and ends on one cylinders (those taken for mechanical testing) meets the requirements of **6.3** to **6.6**, the measurements being taken at least at three transverse sections of the cylindrical part and on a longitudinal section of the base and head;

3) Requirements of 5 (materials) are complied with;

4) Requirements of **6.7, 6.8** and **7.5** to **7.8** are complied with for all cylinders selected by the inspector; and

5) Internal and external surfaces of the cylinders are free of any defect which might make them unsafe to use *(see* Annex A).

b) Supervise the following tests on the cylinders selected:

1) Tests specified in **10.1.2** (a) (hydraulic bursting test) on one cylinder, the cylinders bearing representative stamp markings;

2) Tests specified in **10.1.2** (b) (mechanical testing) on one cylinder/test rings, the test pieces being identifiable with the batch;

3) Tests specified in **9.2.3** (pressure cycling test) on two cylinders, with minimum base thickness of the batch, the cylinders bearing representative stamp markings;

4) For cylinders made from seamless tube the test specified in **9.2.4** (base check) on the two cylinders selected for mechanical testing and one for burst test; and

5) Cylinders selected for pressure cycling test may be used for hydraulic bursting test.

NOTES

1 For performance of tests **9.2.2** (b) (1) and **9.2.2** (b) (4), the cylinder which have passed lest **9.2.2** (b) (3) may be used.

2 However, for cyl inder exceeding 300 mm dia and capacity exceeding 150 litres only one cylinder shall be subjected to test at **9.2.2** (b) (3) followed by test at **9.2.2** (b) (1).

3 In case of cylinders having diameter exceeding 300 mm for test at **9.2.2** (b) (2), a sample cut from a tube of same heat number in the form of a ring of sufficient length to provide requisite test piece, may be taken and subjected to the same heat treatment, so that its mechanical properties are representative of the cylinders in the batch.

4 Consideration should be given to select cylinders which represent the lower and upper values of the hardness range for test at **9.2.2** (b) (3)

9.2.3 *Pressure Cycling Test*

This test shall be carried out on cylinders bearing representative markings with a non-corrosive liquid subjecting the cylinders to successive reversals at an upper cyclic pressure which is at least equal to the hydraulic test pressure (P_h). The cyclinders shall withstand 12 000 cycles without failure.

For cylinders with hydraulic test pressure (P_h) > 450

bar, the upper cyclic pressure may be reduced to two-third or 60 percent of this test pressure as below. In this case, the cylinders shall withstand 80 000 cycles without failure.

NOTE — $UCP = \frac{2}{3} \times P_h$ (*see* **6.3.1**)

The value of the lower cyclic pressure shall not exceed 10 percent of the upper cyclic pressure, but shall have an absolute maximum of 30 bar.

The cylinder shall actually experience the maximum and minimum cyclic pressures during the test.

The frequency of reversals of pressure shall not exceed 0.25 Hz (15 cycles/min). The temperature measured on the outside surface of the cylinder shall not exceed 50°C during the test.

The test shall be considered satisfactory if the cylinder attains the required number of cycles without developing a leak.

After the test, the cylinder bases shall be sectioned in order to measure the thickness and to ensure that this thickness is greater than the minimum designed thickness

9.2.4 *Base Check (for Cylinder Made from Tube Only)*

A meridian section with offset equal to saw blade thickness shall be made in the base of the cylinder and one of the surfaces thus obtained polished for examination under a magnification of between 5 X and 10 X.

The cylinder shall be regarded as defective if the presence of cracks is detected. It shall also be regarded as defective, if the dimensions of any pores or inclusions present reach values considered to pose a threat to safety.

In no case shall the sound thickness (that is the thickness with no defects) in the base centre be less than the specified shell thickness as per **6.4** and **6.5**.

9.3 Type Approval Certificate

If the results of the checks according to **9.2** are satisfactory, the inspector shall issue a type approval certificate (a typical example is given in Annex C).

10 BATCH TEST

10.1 General Requirements

10.1.1 All tests given at **10.1.3** for checking the quality of the gas cylinder material shall be carried out on material from finished cylinders or test rings.

For the purpose of batch testing the manufacturer shall provide the inspector with:

a) Type approval certificate;

b) Certificates from material manufacturer stating the cast analysis of the steel supplied for the manufacture of the cylinders, and heat-wise verification by test laboratory;

c) Evidence that appropriate heat treatment has been performed;

d) A list of the cylinders, stating serial numbers and stamp markings as required;

e) Confirmation that threads are checked properly in accordance with gauging requirements. The gauges to be used shall be specified; and

f) Certificates showing the ultrasonic testing results.

10.1.2 During batch testing, the inspector shall:

a) Ascertain that the type approval certificate has been obtained and the cylinders confirm to it;

b) Check whether the requirements set out in **5, 6** and **7** have met and in particular check by an external and, if physically possible, internal visual examination of the cylinders whether their construction and checks carried out by the manufacturer in accordance with **7.2** to **7.9** are satisfactory. The visual examination shall cover at least 10 percent of the cylinders manufacture;

c) Check whether the information supplied by the manufacturer referred to in **10.1.1** is correct;

d) Select the necessary cylinders per batch for destructive testing and carry out the tests specified in **10.2** to **10.5.** Where alternative tests are permitted, the purchaser and manufacturer shall agree which tests are to be carried out; and

e) Assess the results of hardness testing specified in **11.3.**

10.1.3 *Mechanical Test*

The following tests shall be carried out on one cylinder of each batch:

a) One tensile test in the longitudinal direction (*see* **10.2**);

b) Two bend tests *(see* **10.4.1)** in a circumferential direction;

c) Three impact tests in transverse or longitudinal direction as required in **10.3** when the thickness of the cylinder permits the machining of a test piece at least 3 mm thick; and

d) One hydraulic bursting test *(see* **10.5**) on a further cylinder *(see* Note 2).

NOTES

1 For location of test pieces, *see* Fig. 6.

2 Applicable only for chromium molybednum cylinders.

10.2 Tensile Test

10.2.1 A tensile test shall be carried out on material taken from the cylindrical part of the cylinder by adopting either of the following procedures:

a) Rectangular specimens shall be prepared in accordance with Fig. 6 and with a gauge length $L_o = 5.65 \sqrt{S_o}$. The two faces of the test piece representing the inside and outside surfaces of the cylinder shall not be machined. The elongation *(A)* measured shall not be less than 14 percent;

b) Machined round specimens shall be prepared having the maximum diameter practicable, the elongation *(A)* measured on a gauge length of 5 times the specimen diameter being no less than 16 percent. It is recommended that machined round specimens are not used for wall thickness less than 3 mm.

10.2.2 In case of non-proportional elongation, the yield stress shall be 0.2 percent of proof stress. The tensile test shall be carried out in accordance with IS 1608.

10.3 Impact Test

10.3.1 Except for the requirement set out below, the test shall be carried out in accordance with IS 1757.

The impact test pieces shall be taken in the direction as required in Table 4 from the wall of the cylinder. The notch shall be perpendicular to the face of the cylinder wall *(see* Fig. 7). For longitudinal tests the test piece shall be machined all over (on six faces). If the wall thickness does not permit a final test piece width of 10 mm, the width shall be as near as practicable to the nominal thickness of the cylinder wall. The test pieces taken in the transverse direction shall be machined on four faces only, the outer face of the cylinder wall un-machined and the inner face optionally machined as shown in Fig. 8.

Minimum acceptance values are given in Table 4.

10.4 Bend Test

10.4.1 The bend test shall be carried out on two test pieces obtained by cutting either one or two rings of width 25 mm or 4 times the minimum agreed finished thickness, whichever is the greater, into equal parts. Each test piece shall be of sufficient length to permit the bend test to be carried out correctly. Only the edges of each strip may be machined.

10.4.2 The test piece shall not crack when bent inwards around the former until the inside surfaces are not further apart than the diameter of the former *(see* Fig. 9).

10.4.3 The maximum diameter of the former (D_F) shall be established from Table 5. For the actual tensile strength (R_m) given in Table 5; $D_F = n \times t$ where t test piece thickness.

10.5 Hydraulic Bursting Test

10.5.1 *Test Installation*

The test equipment shall be capable of operation in accordance with the test conditions specified in **10.5.2** and of accurately producing the information required by **10.5.3.**

A typical hydraulic bursting test installation is illustrated in Fig. 10.

10.5.2 *Test Conditions*

As the cylinder and test equipment are being filled with water, care shall be taken to ensure that no air is trapped in the circuit by means of operating the hydraulic pump until water is discharged from the vent or air-release valve.

During the test, pressurization shall be carried out in two successive stages:

a) In the first stage, the pressure shall be increased at a rate of not more than 0.5 MPa/s (5 bar/s) up

Table 4 Impact Test Acceptance Values

(Clause 10.3.1)

Sl No. (1)	Cylinder Diameter D_m, in mm (2)		> 140 (3)			≤ 140 (4)
i)	Direction of testing		Transverse			Longitudinal
ii)	Width of the test piece		3 - 5	> 5 - 7.5	>7.5 - 10	3 - 10
iii)	Test temperature, in °C[1)]		-20			-20
iv)	Impact strength in J/cm^2, *Min*	Mean of 3 specimens	30	35	40	60
		Individual specimen	24	28	32	48

[1)]For applications at lower temperatures the test shall be carried out at the lowest temperature specified.

to a pressure value corresponding to the initiation of plastic deformation; and

b) In the second stage, the pump discharge rate shall be maintained at as constant a level as is possible until the cylinder bursts.

Table 5 Bend Test Requirements

(Clause 10.4.3)

Sl No	Actual Tensile Strength R_m(MPa)	Bend Test Value of *n*
(1)	(2)	(3)
i)	Up to and including 422	2
ii)	Above 422 up to and including 500	3
iii)	Above 500 up to and including 579	4
iv)	Above 579 up to and including 677	5
v)	Above 677 up to and including 765	6
VI)	Above 765 up to and including 873	7
vii)	Above X73	8

10.5.3 *Interpretation of Test*

a) The interpretation of the burst test shall involve:

1) Examination of the pressure/time curve or pressure/volume of water used curve, to permit determination of the pressure (P_y) at which plastic deformation of the cylinder commences, together with the bursting pressure (P_b); and

2) Examination of the burst tear and of the shape of its edges.

For the result of a bursting test to be considered satisfactory, the following requirements shall be met:

1) Observed yield pressure (P_v) shall be greater than or equal to $1/F \times 1.18$ working pressure (P_h); and

2) Actual burst pressure (P_b) shall be greater than or equal to 2.25 times of working pressure (P_w).

b) The cylinder shall remain in one piece and shall not fragment;

c) The main fracture shall be in the cylindrical portion and shall not be brittle, that is the fracture edges shall be inclined with respect to the wall. The tear shall not reveal a significant defect in the metal;

d) For cylinder with wall thickness less than 7.5 mm, the fracture shall be acceptable only if it conforms to one of the following descriptions:

1) Longitudinal, without branching (*see* Fig. 11);

2) Longitudinal, with a side branching at each end which in no case extends d_2 beyond the longitudinal plane normal to the fracture plane (*see* Fig. 12).

e) Cylinder having diameter exceeding 300 mm and water capacity exceeding 150 litres shall be subjected to hydraulic pressure not less than calculated burst pressure as per formula given below. During pressurization, if no visible permanent deformation is observed, the cylinder shall be considered to have passed the burst test.

$$R_g \times 0.95 = \frac{P_b (D_o - 2\alpha')}{200\,\alpha'}$$

10.5.4 *Acceptance Criteria*

Illustrate satisfactory burst test profiles are given in Fig. 11 and Fig. 12 and batches represented by such results shall be accepted.

If the configuration of the fracture does not conform to Fig. 11 or Fig. 12, but all other material and mechanical tests are satisfactory, investigation of the cause of the non-conformity shall be undertaken prior to acceptance or rejection of the batch.

11 TEST ON EVERY CYLINDER

11.1 General

During production, all cylinders shall be subjected to the test as specified in 7.2 and **7.4**.

Following final heat treatment, all cylinders shall be subjected to the following tests. However, cylinder selected for testing under **10** may be exempted.

a) Hydraulic proof pressure test in accordance with **11.2.1** or a hydraulic volumetric expansion test in accordance with **11.2.2;**

b) Hardness test in accordance with **11.3**;

c) Leakage test in accordance with **11.4**;

d) Water capacity check in accordance with **7.11**; and

e) Ultrasonic examination in accordance with **7.4**.

If there is an evidence of failure of test apparatus, the test shall be repeated.

11.2 Hydraulic Test

11.2.1 *Proof Pressure Test*

The water pressure in the cylinder shall be increased at a controlled rate until the test pressure, P_h, is reached. The cylinder shall remain under pressure P_h for at least 30 s to establish that the pressure does not fall and that there are no leaks.

11.2.2 *Hydrostatic Stretch Test*

The water pressure in the cylinder shall be increased at a controlled rate until the test pressure, P_h, is reached. The cylinder shall remain under pressure P_h for at least

30 s and the total volumetric expansion measured. The pressure shall be released, and the volumetric expansion re-measured *(see* IS 5844).

The cylinder shall be rejected, if it shows a permanent expansion (that is, volumetric expansion after the pressure has been released) in excess of 10 percent of the total volumetric expansion measured at the test pressure P_h.

The total and permanent expansion readings shall be recorded together with the corresponding serial number of each cylinder tested, so that the elastic expansion (that is, total expansion less permanent expansion) under the test pressure can be established for each cylinder.

11.3 Hardness Test

The hardness test [*see* **11.1** (b)] in accordance with IS 1500 (Brinell), or IS 1586 (Rockwell) or other equivalent methods shall be carried out by the manufacturer after the final heat treatment of the cylinder. The hardness values thus determined according to IS 4258, shall be within the limits specified by the cylinder manufacturer for the material, dependent upon the heat treatment used for the production of the cylinder and the intended gas service (that is embrittling gases).

NOTES

1 Methods for measuring the surface indentation, other than given in IS 1500 or IS 1586 may be used subject to agreement between the parties concerned.

2 Cylinders made from carbon manganese steel shall not be subjected to this test, except those having a hydraulic test pressure ≥ 260 bar.

11.4 Leakage Test

The manufacturer shall use such manufacturing techniques and apply such tests as will demonstrate to the satisfaction of the inspector that the cylinders do not leak. This test shall be conducted at a pressure not lower than $0.6 \times P_h$ *(see* **6.3**).

11.5 Capacity Check

The manufacturer shall verify that water capacity of each cylinder conforms to **7.11**.

12 CERTIFICATION

Each batch of cylinders shall be covered by a certificate signed by the inspecting authority's representative to the effect that the cylinders meet the requirements of this standard in all respects. An example of a suitable worded certificate is given in Annex D.

Copies of the certificate shall be issued to the manufacturer. The original certificate shall be retained by the inspector and the copies by the manufacturer in accordance with the regulations of the relevant statutory authority.

13 CYLINDER MARKING

Each cylinder shall be permanently stamped with the following:

a) Serial number and identification of manufacturer;

b) Number of this standard; IS 7285-2;

c) Test pressure and date of the hydrostatic stretch test (such as 3/04 for March 2004);

d) Tare weight, in kg (except in case of dissolved gas);

e) Design minimum water capacity of the cylinder, in litres;

f) Inspector's official mark;

g) A whole number, indicating the value of yield stress, R_e, in MPa number, on which the calculation of wall thickness was based;

h) Symbol for heat treatment, Q&T;

j) Filling pressure at 15°C in the case of permanent gases and filling ratio in the case of high pressure liquefiable gases; and

k) Name or chemical symbol of the gas for which cylinder is to be used.

14 BIS CERTIFICATION MARKING

Each cylinder may also be marked with the Standard Mark.

14.1 The use of the Standard Mark is governed by the provisions of the *Bureau of Indian Standards Act,* 1986 and the Rules and Regulations made thereunder. The details of conditions under which the license for the use of the Standard Mark may be granted to the manufacturers or producers may be obtained from the Bureau of Indian Standards.

14.2 The marking shall not be made on the body of the cylinder but shall be at areas in the formed neck where the thickness of metal is greater than the design minimum and where it is adequate for marking to be carried out.

14.2.1 Suitable area of marking shall be determined by sectioning a prototype cylinder by any suitable method acceptable to the statutory authority.

14.2.2 The characters in marking shall normally be at least 6 mm in height. On cylinders below 140 mm diameter, the height may be reduced, but in no case shall the characters be less than 3 mm in height. The indentation shall not be excessive depth.

14.2.3 The stamps used for marking shall have small radii at changes of section to avoid the formation of sharp edges in the stamped marking.

14.3 Colour Identification

The cylinder shall be painted externally in accordance with the colour scheme specified in IS 3933 or IS 4379.

14.3.1 *Export Market*

Cylinders manufactured for export shall be painted externally as agreed to between the purchaser and the manufacturer.

15 RECORDS

Records shall be kept of all the tests made at the cylinder manufacturer's works and copies shall be forwarded to the purchase of the cylinder and the inspecting authority.

16 PREPARATION FOR DESPATCH

Before being despatched from the manufacturer's works, all cylinder shall be thoroughly cleaned and all particles of grip, fillings or other matter which may have collected inside the cylinder in the course of manufacture, heat treatment and testing shall be removed completely and the cylinder dried internally be heating uniformly to a temperature not exceeding 300°C. The outside of the cylinder shall be given a suitable protective coating before despatch.

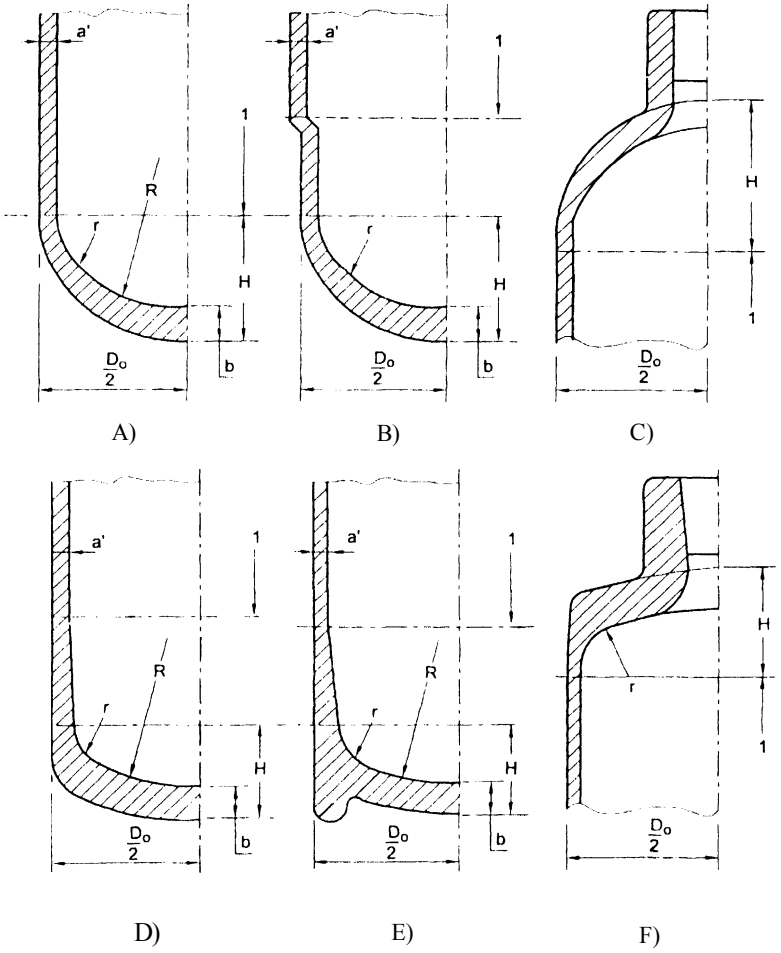

KEY

1 Cylindrical Part

NOTE — Shape B shall not be excluded from this requirement

FIG. 1 TYPICAL CONVEX ENDS

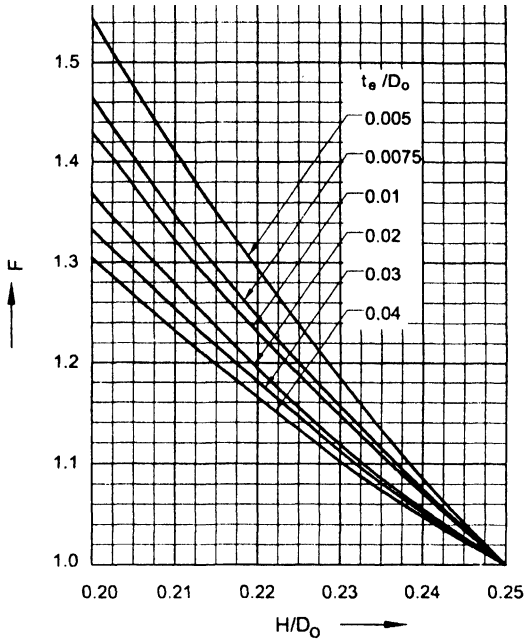

FIG. 2 VALUE OF SHAPE FACTOR *F* FOR H/D_o BETWEEN 0.20 AND 0.25

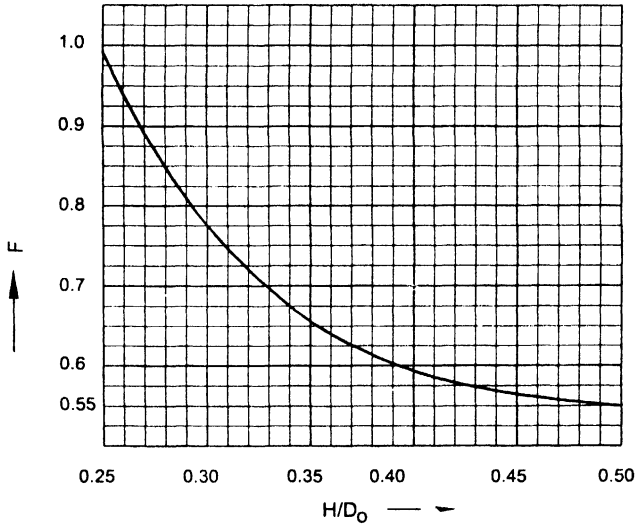

FIG. 3 VALUE OF SHAPE FACIOR *F* FOR H/D_o BETWEEN 0.25 AND 0.50

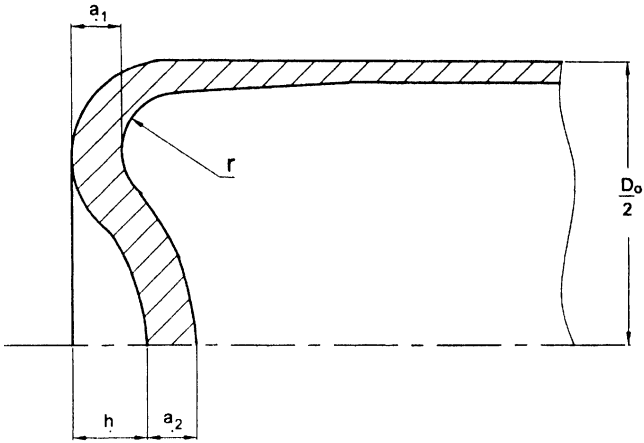

FIG. 4 CONCAVE BASE ENDS

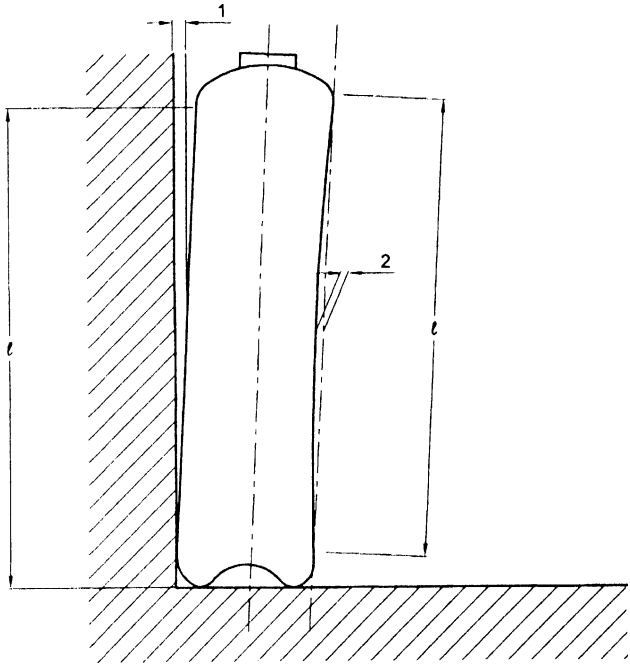

KEY

1 Maximum 0.01 × 1 *(see* **7.8**).
2 Maximum 0.003 × 1 *(see* **7.7**).

FIG. 5 ILLUSTRATION OF DEVIATION OF CYLINDRICAL PART OF SHELL FROM A STRAIGHT LINE AND FROM VERTICAL

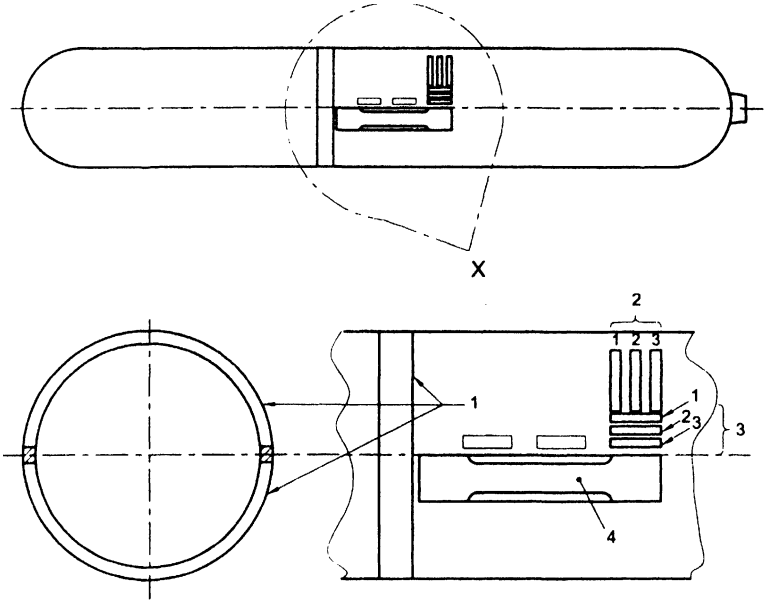

KEY

1 Bend Test Pieces
2 Transverse Impact Test Pieces
3 Longitudinal Impact Test Pieces (Alternative Positions Shown Dotted)
4 Tensile Test Piece

FIG. 6 TYPICAL LOCATION OF TEST PIECES

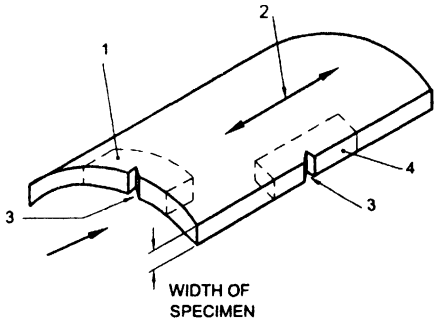

KEY

1 Transverse Specimen
2 Cylinder Longitudinal-Axis
3 Charpy V-Notch Perpendicular to Wall
4 Longitudinal Specimen

FIG. 7 DESCRIPTION OF TRANSVERSE AND LONGITUDINAL IMPACT TEST PIECES

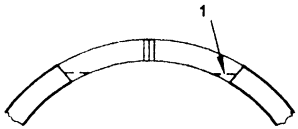

a) Test Piece Taken from Cylinder Wall

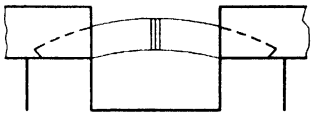

b) Front View of Test Piece in Impact Tester

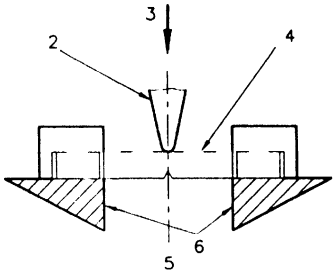

c) Top View of Test Piece in Impact Tester

KEY

1 Machinning Optional
2 Striker
3 Direction of Strike
4 Test Piece
5 Centre of Strike
6 Anvils

FIG.. 8 DESCRIPTION OF TRANSVERSE IMPACT TESTING

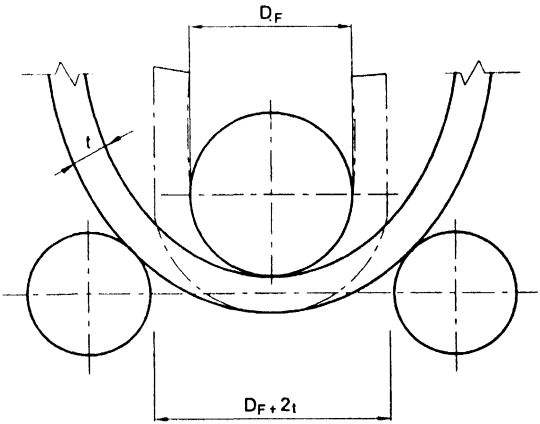

FIG. 9 ILLUSTRATION OF BEND TEST

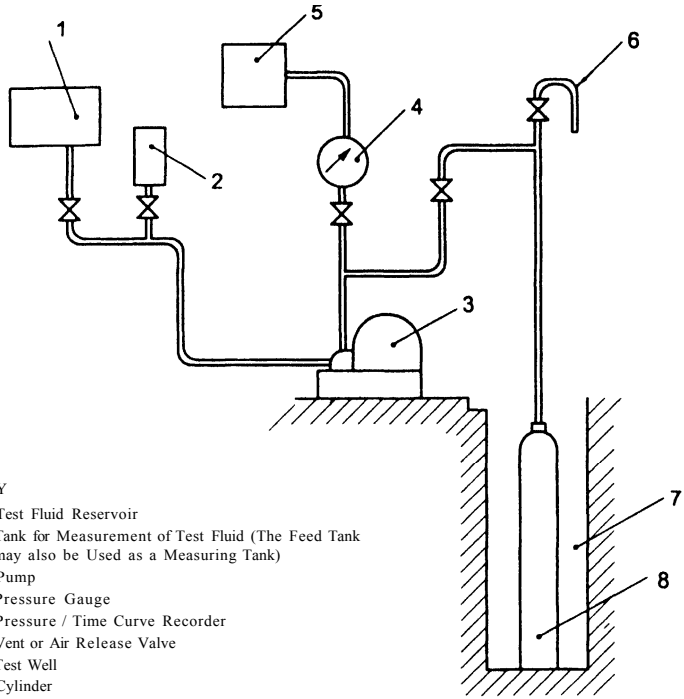

KEY

1 Test Fluid Reservoir
2 Tank for Measurement of Test Fluid (The Feed Tank may also be Used as a Measuring Tank)
3 Pump
4 Pressure Gauge
5 Pressure / Time Curve Recorder
6 Vent or Air Release Valve
7 Test Well
8 Cylinder

FIG. 10 TEST INSTALLATION

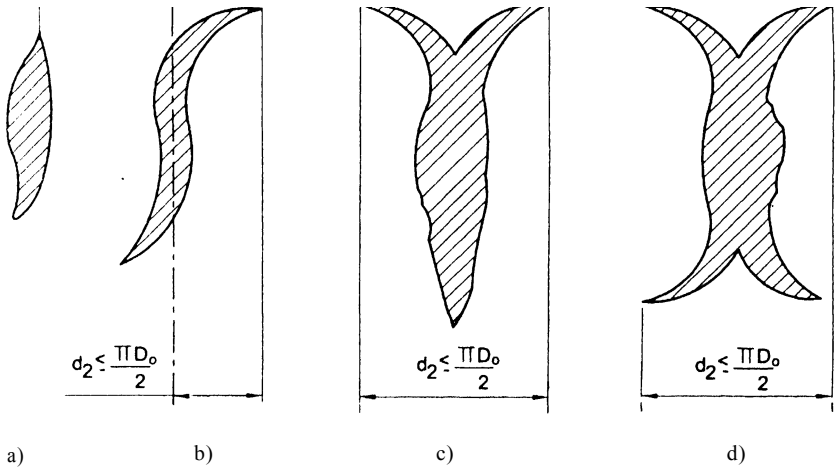

FIG. 11 ACCEPTABLE BURST PROFILES — LONGITUDINAL WITHOUT BRANCHING

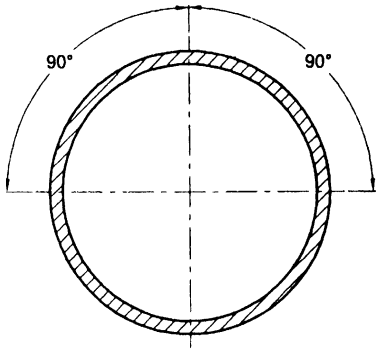

FIG. 12 ACCEPTABLE BURST PROFILE

ANNEX A

(Clauses 7.3 *and* 9.2.2)

DESCRIPTION, EVALUATION OF MANUFACTURING DEFECTS AND CONDITIONS FOR REJECTION OF SEAMLESS STEEL CAS CYLINDERS AT THE TIME OF FINAL INSPECTION BY THE MANUFACTURER

A-1 INTRODUCTION

Several types of defects can occur during the manufacturing of a seamless steel gas cylinder.

Such defects can be mechanical or material. They can be due to the basic material used, the manufacturing process, heat treatments, manipulations, necking, machining or marking operations and other circumstances during manufacture.

The aim of this Annex is to identify the manufacturing defects most commonly met and to provide general guidelines to the inspectors that perform the visual inspection.

Nevertheless extensive field experience, good judgment and independence from production area necessary by the inspector to detect and to be able to evaluate and judge a defect at the time of the visual inspection.

A-2 GENERAL

A-2.1 It is essential to perform the visual internal and external inspection in good conditions.

The surface of the metal and in particular of the inner wall shall be completely clean, dry and free from oxidation products, corrosion, scale, etc, since these could obscure other more serious defects. Where necessary, the surface should be cleaned under closely controlled conditions by suitable methods before further inspection.

Appropriate sources of illumination with sufficient intensity should be used.

After the cylinders have been closed and the threads have been cut, the internal neck area should be examined by means of an introscope, dental mirror or other suitable appliance.

A-2.2 Small defects may be removed by local dressing, grinding, machining, or other appropriate method.

Great care should be taken to avoid introducing new injurious defects.

After such a repair the cylinders should be re-examined.

A-3 MANUFACTURING DEFECTS

The most commonly found manufacturing defects and their definitions are listed in Table 6.

Rejection limits for repair or reject are also included in Table 6. These rejection limits are established following considerable field experience. They apply to all sizes and types of cylinders and service conditions. Nevertheless, some customer specifications, some types of cylinder or some special service conditions can require stringent conditions.

A-4 REJECTED CYLINDERS

a) All rejected cylinders should be rendered unserviceable for their original application; and

b) It may be possible to produce cylinders for different service conditions from rejected cylinders.

Table 6 Manufacturing Defects

(Clause A-3)

Defect (1)	Description (2)	Conditions for Rejection and/or Actions (3)	Repair/ Reject (4)
Bulge	Visible swelling of the wall	All cylinders with such a defect	Reject
Dent (flats)	A depression in the wall that has neither penetrated nor removed metal *(see* Fig. 13) *(see also* 'excessive grinding or machining' below)	a) When the depth of the dent exceeds 2%[1)] of the external diameter of the cylinder b) When the depth of the dent is greater than 1 mm and when the diameter of the dent is less than 30 times its depth[1)] NOTE — On small diameter cylinders these general limits may have to be adjusted. Consideration of appearance also plays a part in the evaluation of dents, especially in the case of small cylinders.	Reject Permit repair
Cut, gouge, metallic or scale impression	An impression in the wall where metal has been removed or re-distributed (due basically to the introduction of foreign bodies on the mandrel or matrix during extrusion or drawing operations)	a) *Inside defect:* If not superficial with sharp notches more than 5% of wall thickness[2)] NOTE— Consideration of appearance and localization (in thicker part with lower stresses) can be taken into account. b) *Outside defect:* When the depth exceeds 5% of the wall thickness times the thickness of the cylinders	Reject Repair *(see* A-2.2)
Dent containing cut or gouge	A depression in the wall which contains a cut or gouge *(see* Fig.l4)	All cylinders with such defects	Reject
Excessive grinding or machining	Local reduction of wall thickness by grinding or machining.	a) When the wall thickness is reduced to below the minimum drawing thickness; and b) When it results in the formation of a dent.	Reject *See* 'dent'
Rib	A longitudinal raised surface with sharp corners *(see* Fig. 15)	*Inside defect:* If height or depth exceeds 5% of wall thickness or if the length exceeds 10% of the length of the cylinders	Repair, if possible or reject
Groove	A longitudinal notch *(see* Fig. 16)	*Outside defect:* When the height or depth exceeds 5% of the wall thickness or when the length exceeds 5 × the thickness of the cylinders	Repair, if possible *(see* **A-2.2**)
Crack	Split, material separation	a) When not removable within thickness tolerance, and b) When removable within thickness tolerance	Reject Repair
Neck cracks	Appear as lines, which run vertically down the thread and across the thread faces. (They should not be confused with tap marks or thread machining marks) *(see* Fig. 17)	1 AH cylinders with such defects	Reject
Shoulder folds	Folding with peaks and troughs situated in the internal shoulder area, which can	a) Folds or cracks that are visible as a line of oxide running into the	Repair, if possible

Table 6 *(Concluded)*

Defect (1)	Description (2)	Conditions for Rejection and/or Actions (3)	Repair/ Reject (4)
	propagate into the threaded area of the shoulder *(see* Fig 18)	threaded portion should be removed by a machining operation until the lines of oxide are no longer visible. After machining, the whole area should be re-inspected carefully and the wall thickness verified	
and/or shoulder cracks	Cracks can start from folds in the internal shoulder area and propagate into the cylindrical machined or threaded area of the shoulder (*see* Fig. 19 shows exactly where shoulder cracks start and how they propagate)	b) If folding or lines of oxide have not been removed by machining, if cracks are still visible or if wall thickness is unsatisfactory; and	Reject
		c) Folds which extend beyond the machined area and are clearly visible as open depressions where no oxides have been trapped in the metal, should be accepted provided that the peaks are smooth and the root of the depression is rounded	Acceptable
Internal cracks in base	Splits in the metal of the bottom of the cylinder in star form	a) When not removable within thickness tolerance; and	Reject
		b) When removable within thickness tolerance.	Repair
Orange peel surface	Orange peel appearance due to discontinuous metal flow	If sharp cracks are visible in the orange peel surface	Acceptable for non-aggressive gases
Internal neck threads damaged or out of tolerance	Neck threads damaged, with dents, cuts. burrs or out of tolerance	a) When the design permits it, threads may be re-tapped and re-checked by the appropriate thread gauge and carefully visually re-examined. The appropriate number of effective threads shall be guaranteed, and	Repair
		b) If not repairable.	Reject
Pitting	Severe surface corrosion	All cylinders with such defects visible after shot blasting	Reject
Non-conformity with design drawing	-	All cylinders presenting such a defect	Repair, if possible or reject
Neck ring not secure	Neck ring turns tinder application of low torque, or pulls off under low axial load *(see* **6.8.2**)	All cylinders presenting such a defect	Repair possible according to approved method only
Arc or torch burns	Partial burning of the cylinder metal, the addition of weld metal or the removal of metal by scarfing or cratering	All cylinders presenting such a defect	Reject

[1] On small diameter cylinders these general limits may have to be adjusted. Consideration of appearance also plays a part in the evaluation of dents, especially in the case of small cylinders.

[2] Consideration of appearance and localization (in thicker parts with lower stresses) can be taken into account.

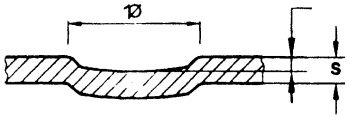

FIG. 13 DENT

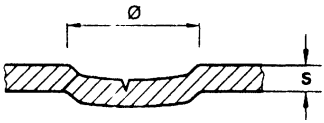

FIG. 14 DENT CONTAINING CUT OR GOUGE

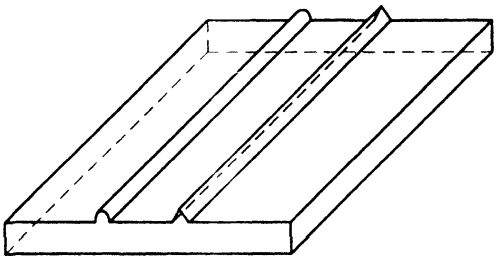

FIG. 15 RIB

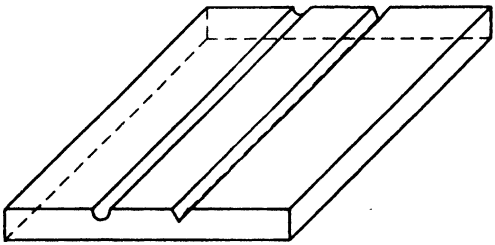

FIG. 16 GROOVE

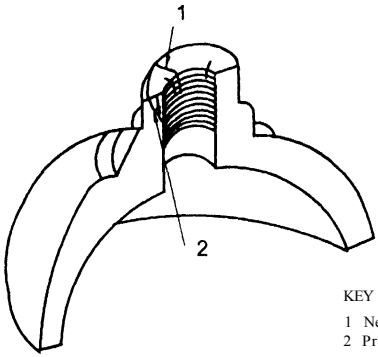

KEY

1 Neck Cracks
2 Propagated Crack in the Neck

FIG. 17 NECK CRACKS

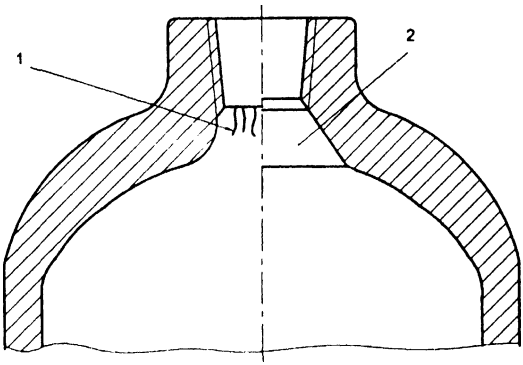

KEY

1 Fold or Cracks
2 After Machining

FIG. 18 CYLINDER SHOULDER FOLDS OR CRACKS BEFORE AND AFTER MACHINING

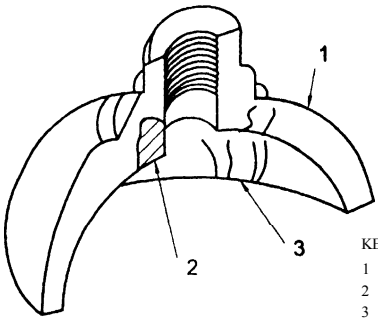

KEY

1 Shoulder Cracks
2 Propagated Crack in the Shoulder
3 Folds

FIG. 19 SHOULDER CRACKS

ANNEX B

(Clause 7.4)

ULTRASONIC INSPECTION

B-1 SCOPE

This Annex is based on techniques used by cylinder manufacturers. Other techniques of ultrasonic inspection may be used, provided these have been demonstrated to be suitable for the manufacturing method.

B-2 GENERAL REQUIREMENTS

The ultrasonic testing equipment shall be capable of at least detecting the reference standard as described in **B-3.2.** It shall be serviced regularly in accordance with the manufacturer's operating instructions to ensure that its accuracy is maintained. Inspection records and approval certificates for the equipment shall be maintained.

The operation of the test equipment shall be by trained personnel and supervized by qualified and experienced certified personnel.

The inner and outer surface of any cylinder which is to be tested ultrasonically shall be in a condition suitable for an accurate and reproducible test.

For flaw detection the pulse echo system shall be used. For thickness measurement either the resonance method or the pulse echo system shall be used. Either contact or immersion techniques of testing shall be used.

A coupling method which ensures adequate transmission of ultrasonic energy between the testing probe and the cylinder shall be used.

B-3 FLAW DETECTION OF THE CYLINDRICAL PARTS

B-3.1 Procedure

The cylinders to be inspected and the search unit shall have a rotating motion and translation relative to one another such that a helical scan of the cylinder will be described. The velocity of rotation and translation shall be constant within ±10 percent. The pitch of the helix shall be less than the width covered by the probe (at least 10 percent overlap shall be guaranteed) and be related to the effective beam width such as to ensure 100 percent coverage at the velocity of rotational movement and translation used during the calibration procedure.

An alternative scanning method may be used for transverse defect detection in which the scanning or relative movement of the probes and the work piece is longitudinal, the sweeping motion being such as to ensure 100 percent surface coverage with about 10 percent overlap of the seeps.

The cylinder wall shall be tested for longitudinal defects with the ultrasonic energy transmitted in both circumferential directions and for transverse defects in both longitudinal directions.

For concave based cylinders where hydrogen embrittlement or stress corrosion may occur, the transition region between the cylindrical part and the cylinder base shall also be tested for transverse defects in the direction of the base. For the area to be considered, *see* Fig. 20. The ultrasonic sensitivity shall be set at +6 dB in order to improve the detection of defects equivalent to 5 percent of the cylindrical wall thickness in this thickened portion.

In this case or when optional testing if carried out on the transition area between the wall and neck and/or all and base, this may be conducted manually if not carried out automatically.

The effectiveness of the equipment shall be periodically checked by passing a reference standard through the test procedure. This check shall be carried out at least at the beginning and end of each shift. If during this check the presence of the appropriate reference notch is not detected then all cylinders tested subsequent to the test acceptable check shall be re-tested after the equipment has been re-set.

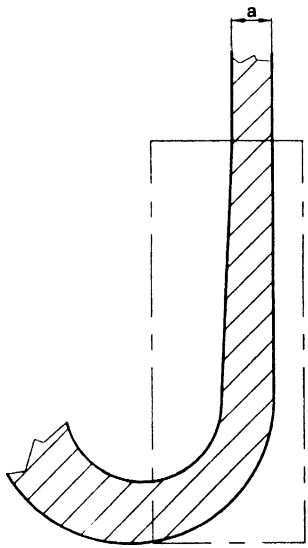

FIG. 20 BASE/WALL TRANSITION REGION

B-3.2 Reference Standard

A reference standard of convenient length shall be prepared from a cylinder of similar diameter and wall thickness range and from material with the same acoustic characteristics (subjected to the same heat treatment) and surface finish as the cylinder to be inspected. The reference standard shall be free from discontinuities which may interfere with the detection of the reference notches.

Reference notches, both longitudinal and transverse, shall be machined on the outer and inner surface of the standard. The notches shall be separated such that each notch can be clearly identified.

Dimensions and shape of notches arc of crucial importance for the adjustment of the equipment *(see* Fig. 21 and Fig. 22).

The length of the notches (*E*) shall not be greater than 50 mm.

The width (*W)* shall be not greater than twice the nominal depth (*T*). However, where this condition cannot be met a maximum width of 1.0 mm is acceptable.

The depth of the notches *(T)* shall be 5 percent ± 0.75 percent of the nominal wall thickness *(S)* with a minimum of 0.2 mm and a maximum of 1.0 mm, over the full length of the notch. Run-outs at each end are permissible.

The notch shall be sharp edged at its intersection with the surface of the cylinder wall. The cross-section of the notch shall be rectangular except where spark erosion machining methods are used; then it is acknowledged that the bottom of the notch shall be rounded.

B-3.3 Calibration of Equipment

Using the reference standard described in **B-3.2**, the equipment shall be adjusted to produce clearly identifiable indications from inner and outer surface notches. The amplitude of the indications shall be as near equal as possible. The indication of smallest amplitude shall be used as the rejection level and for setting visual, audible, recording or sorting devices. The equipment shall be calibrated with the reference standard or probe, or both, moving in the same manner, in the same direction and at the same speed as will be used during the inspection of the cylinder. All visual, audible, recording or sorting devices shall operate satisfactorily at the test speed.

B-4 WALL THICKNESS MEASUREMENT

If the measurement of the wall thickness is not carried out in another stage of production, the cylindrical part shall be 100 percent examined to ensure that the thickness is not less than the guaranteed minimum value.

B-5 INTERPRETATION OF RESULTS

Cylinders with indications which are equal to or greater than the lowest of the indications from the reference notches shall be withdrawn. Surface defects may be removed; after removal the cylinders shall be re-subjected to ultrasonic flaw detection and thickness measurement.

Any cylinder which is shown to be below the guaranteed minimum wall thickness shall be subjected.

B-6 CERTIFICATION

The ultrasonic testing shall be certified by the cylinder manufacturer.

Every cylinder, which has passed ultrasonic testing in accordance with this specification shall be stamp marked with the symbol 'UT'.

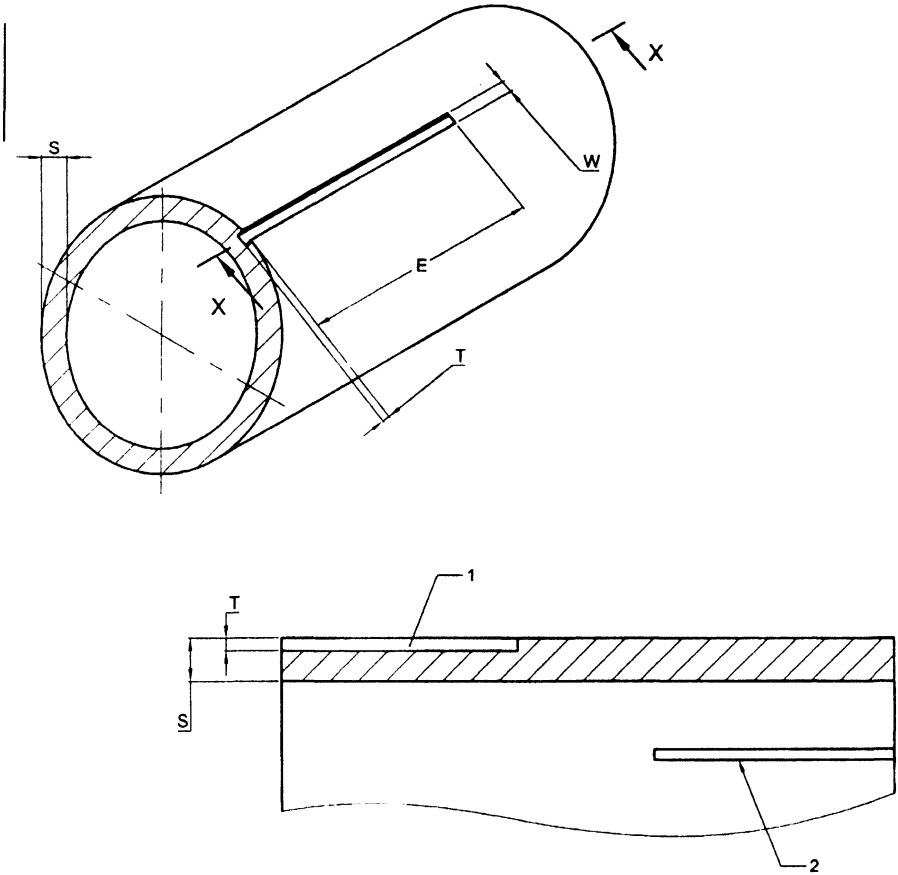

KEY

1 External Reference Notch
2 Internal Reference Notch

NOTE

$T \leq (5 \pm 0.75)\%\ S$ but $\leq$ 1 mm and $\geq$ 0.2 mm
$W \leq 2T$, but if not possible then $W \leq 1$ mm
$E \leq 50$ mm

FIG. 21 SCHEMATIC REFERENCE NOTCHES FOR LONGITUDINAL DEFECTS

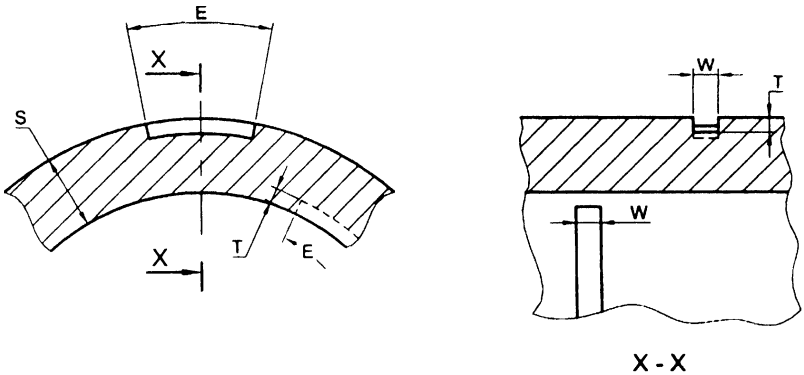

NOTE

$T \leq (5 \pm 0.75)\%\ S$ but 0.2 mm $\leq T \leq$ 1 mm

$W \leq 2T$, but if not possible then $W \leq$ 1 mm

$E \leq$ 50 mm

FIG. 22 SCHEMATIC REFERENCE NOTCHES FOR CIRCUMFERENTIAL DEFECTS

ANNEX C

(Clause 9.3)

TYPE APPROVAL CERTIFICATE

This Annex provides an example of a suitable form of a type approval certificate. Other formats also acceptable.

TYPE APPROVAL CERTIFICATE

Issued by

(Authorized Inspection Authority)

applying IS Standard .....

concerning

SEAMLESS STEEL GAS CYLINDERS

Approval No.: . . . . . Date: .....

Type of cylinder: .....

(Description of the family of cylinders (Drawing No.) which has received type approval)

P_h ..... bar, D_{min} ..... mm, D_{max} ..... mm, a' ..... mm

Shape of base: . . . . . b ..... mm

L_{min} ..... mm, Z_{smax} ..... mm, V_{min} ..... litre, V_{max} ..... litre

Material and heat treatment: .....

Material and characteristics : Material ..... R_e ..... MPa, R_g ..... MPa

Manufacturer or agent: .....

(Name and address of manufacturer or its agent)

All information may be obtained from

(Name and address of approving body)

Date: .....

Place: .....

(Signature of Inspector)

ANNEX D

(Clause 12)

ACCEPTANCE CERTIFICATE

This Annex provides an example of a suitable form of acceptance certificate. Other formats are also acceptable.

ACCEPTANCE CERTIFICATE

Acceptance certificate for seamless steel cylinders No.....

A consignment of.....cylinders consisting of.....test batches have been inspected and tested.....according to IS 7285 (Part 2).

(Designation or Type of gas):.....

Manufacturer's No.:.....to.....

Owner's No.[1] to.....

Manufacturer:.....Manufacturer Order No.:.....

Address:.....

Country:.....Date:.....

Owner/Customer[2] Purchase Order No.:.....

Address:.....

Country:.....Date:.....

TECHNICAL DATA

Water capacity, V: Nominal[1].....litre
Minimum[1].....litre

Nominal length:.....mm
(without cap and without valve)

Test pressure, P_h :.....bar

Outside diameter, D_o:.....mm

Working pressure[1] at 15°C, P_w :.....bar

Minimum wall thickness, a :.....mm

Maximum filling charge[1] kg

Drawing No.:.....Approved vide
CCE's letter No:.....dated:.....

Material: Manufacturer's name, Specification, designation and grade:

Specified analysis[3]	C	S	Mn	P	S	Cr	Mo	Ni
Percent, *Max* :								
Percent, *Min* ;								

Heat treatment:

Stamp markings[3]:

Date Manufacturer

[1] If required by customer.
[2] Delete as applicable.
[3] To be quoted or drawing to be attached.

ACCEPTANCE TESTS

1. Measurements taken on one representative cylinder of the batch[4)]

Test No. or Batch No. or Cylinder No.	Covering Serial No.....to	Water Capacity, litre	Mass Empty, kg	Minimum Measured Thickness, mm	
				Wall	Base

2. Mechanical Tests[4)]

Test No.	Cast No.	Tensile Test			Hardness	Impact Test		Bend or Flattening Test
		Yield Stress (R_{ea}) MPa	Tensile Strength (R_m) MPa	Elong-ation *(A)* %	HB	Charpy(V)....°C Direction		180° Without Cracking
						Average J/cm^2	Minimum J/cm^2	
Minimum Values								

This is to certify that the cylinders covered by this Acceptance Certificate have passed the hydraulic pressure test and all the other tests as required in **10** of IS 7285 (Part 2) and they are in accordance with this standard.

Special remarks :.....

On behalf of

Date (Signature of Inspector)

[4)] Need not be filled in if test reports are attached.

ANNEX E

(Foreword)

COMMITTEE COMPOSITION

Gas Cylinders Sectional Committee, ME 16

Organization	*Representative (s)*
Department of Explosives, Nagpur	SHRI R. H. BHALEKAR *(Chairman)* SHRI C. R. SURENDRANATHAN *(Alternate)*
All India Industrial Gases Manufacturers Association, New Delhi	DR P. L. BHATIA SHRI B. N. QANUNGO *(Alternate)*
Maimer Lawrie & Co Ltd, Mathura	SHRI K. GOPINATHAN SHRI DEHASHIS DASS *(Alternate)*
Bharat Petroleum Corporation Ltd, Mumbai	SHRI GEORGE PAUL SHRI S. K. DEY *(Alternate* I) SHRI SURESH NAIR *(Alternate* II)
Bharat Pumps & Compressors Ltd, Allahabad	SHRI K. C. JOSHI SHRI S. K. TIWARI *(Alternate)*
BOC India Ltd, kolkata	SHRI P. K. BHATTACHARYA SHRI N. R. PAL *(Alternate)*
Everest kanto Cylinder Ltd, Aurangabad	SHRJ AJIT K. PARIKJI SHRI P. M. SAMVATSAR *(Alternate* I) SHRI A. G. KHAMKAR *(Alternate* II)
Hindustan Petroleum Corporation Ltd, Mumbai	SHRI K. KRISHNAN SHRI D. N. KRISHNAMURTHY *(Alternate)*
Hindustan Wires Ltd, Faridabad	SHRI R. TANDON SHRI N. K. SAWHNEY *(Alternate)*
Indian Gas Cylinders, Faridabad	SHRJ E. M. PATEL SHRI D. C. JAIN *(Alternate)*
Indian Oil Corporation Ltd, Mumbai	SHRI B. L. BANSAL SHRI A. N. KHAPRE *(Alternate)*
International Industrial Gases Ltd, Kolkata	SHRI DFVENDRA K. GARG SHRI NIKHILESH K. GARG *(Alternate)*
J.R. Fabricators Ltd, Mumbai	SHRI ASHWIN H. MEHTA SHRI S. SESHKUMAR *(Alternate)*
Kahsons Gas Equipments Ltd, Hyderabad	SHRI SATISH KABRA SHRI S. SONI *(Alternate)*
Kosan Industries Ltd, Mumbai	SHRI A. T. AZAVEDO SHRI D. R. BHAGALIA *(Alternate)*
LPG Equipment Research Centre, Bangalore	SHRI I. M BHOLA SHRI S. M VENUGOPAL *(Alternate)*
Maruti Koatsu Cylinders Ltd, Mumbai	SHRI NITIN J. THAKKAR SHRI A. S. SARAN *(Alternate)*
Met Lab Services Pvt Ltd. Mumbai	SHRI S. C. PARIKH SHRI SUDHIR KAUL *(Alternate)*
Ministry of Defence (R&D), Pune	SHRI N. K. CHOPRA SHRI A. BASU *(Alternate)*
Ministry of Defence, Pune	SHRI K. PARTHIBAN SHRI D. D. BANGAR *(Alternate)*
Nagpur Fabriforge Pvt Ltd. Nagpur	SHRI G. L. NFEMA SHRI A. M.TIJRE *(Alternate)*
National Safety Council, Mumbai	SHRJ H. N. GUPTA
Shri Shakti LPG Ltd. Hyderabad	SHRI J. P. RAMAPPA SHRI K. V. C. RAO *(Alternate)*
In personal capacity *(303, Shantikunj, Athwalines, Surat)*	SHRI L. D. THAKKAR
BIS Directorate General	SHRI M. L. CHOPRA. Director & Head (MED) [Representing Director General *(Ex-officio)*]

Member Secretary

SHRI S. B. ROY

Director (MED). BIS

High Pressure Gas Cylinders Subcommittee, ME 16:3

Organization	*Representative(s)*
Bharat Pumps & Compressors Ltd, Allahabad	SHRI UTTAM KUMAR TIWARI (*Convener*) SHRI S. K. TIWARI *(Alternate)*
All India Industrial Gases Manufacturers Association, New Delhi	SHRI A. R. SINGH SHRI S. DEB (*Alternate)*
BOC India Ltd, Kolkata	SHRI P. K. BHATTACHARYA SHRI D. MUKHERJEE (*Alternate)*
Everest Kanto Cylinder Ltd, Aurangabad	SHRI AJIT K. PARIKH SHRI P. M. SAMVATSAR (*Alternate)*
Everest Kanto Cylinder Ltd, Tarapur	SHRI V. K. KHOT SHRI A. G. KHAMKAR (*Alternate)*
lnox Air Products Ltd, Greater Noida	SHRI B. N. QANUNGO
International Industrial Gases Ltd, Kolkata	SHRI DEVENDRA K. GARG SHRI NIKHILESH K. GARG *(Alternate)*
Jai Maruti Gas Cylinders Pvt Ltd, Gwalior	SHRI ASHOK K. NIGAM SHRI P. K. NIGAM *(Alternate)*
M N ??? & Co Ltd, Kolkata	SHRI A. K. CHAKRABARTY SHRI P. K. BANDYOPADHYAY *(Alternate)*
Maruti Koatsu Cylinders Ltd, Mumbai	SHRI NITIN J. TIKKKAR SHRI A. S. SARAN *(Alternate)*
Met Lab Services Pvt Ltd, Mumbai	SHRI S. C. PARIKH SHRI SUDHIR KAUL *(Alternate)*
Ministry of Defence, Pune	SHRI K. PRATIBHAN SHRI S. K. DAS *(Alternate)*
Tekno Valves, Kolkata	SHRI Y. K. BEHANI SHRI R. BFHANI *(Alternate)*

Bureau of Indian Standards

BIS is a statutory institution established under the *Bureau of Indian Standards Act,* 1986 to promote harmonious development of the activities of standardization, marking and quality certification of goods and attending to connected matters in the country.

Review of Indian Standards

Amendments are issued to standards as the need arises on the basis of comments. Standards are also reviewed periodically; a standard along with amendments is reaffirmed when such review indicates that no changes are needed; if the review indicates that changes are needed, it is taken up for revision. Users of Indian Standards should ascertain that they are in possession of the latest amendments or edition by referring to the latest issue of 'BIS Catalogue' and 'Standards: Monthly Additions'.

This Indian Standard has been developed from Doc: No. ME 16 (0690).

Amendments Issued Since Publication

Amend No.	Date of Issue	Text Affected

BUREAU OF INDIAN STANDARDS

Headquarters:

Manak Bhavan, 9 Bahadur Shah Zafar Marg, New Delhi 110002
Telephones: 2323 0131, 2323 3375, 2323 9402

Telegrams: Manaksanstha
(Common to all offices)

Regional Offices:		Telephone
Central	: Manak Bhavan, 9 Bahadur Shah Zafar Marg NEW DELHI 110002	2323 7617 2323 3841
Eastern	: 1/14 C.I.T. Scheme VII M, V.I.P. Road, Kankurgachi KOLKATA 700054	2337 8499, 2337 8561 2337 8626, 2337 9120
Northern	: SCO 335-336, Sector 34-A, CHANDIGARH 160022	60 3843 60 9285
Southern	: C.I.T. Campus, IV Cross Road, CHENNAI 600113	2254 1216, 2254 1442 2254 2519, 2254 2315
Western	: Manakalaya, E9 M1DC, Marol, Andheri (East) MUMBAI 400093	2832 9295, 2832 7858 2832 7891, 2832 7892

Branches : AHMEDABAD. BANGALORE. BHOPAL. BHUBANESHWAR. COIMBATORE. FARIDABAD. GHAZIABAD. GUWAHATI. HYDERABAD. JAIPUR. KANPUR. LUCKNOW. NAGPUR. NALAGARH. PATNA. PUNE. RAJKOT. THIRUVANANTHAPURAM. VISAKHAPATNAM.

Printed at Simco Printing Press, Delhi