इंटरनेट मानक

Disclosure to Promote the Right To Information

Whereas the Parliament of India has set out to provide a practical regime of right to information for citizens to secure access to information under the control of public authorities, in order to promote transparency and accountability in the working of every public authority, and whereas the attached publication of the Bureau of Indian Standards is of particular interest to the public, particularly disadvantaged communities and those engaged in the pursuit of education and knowledge, the attached public safety standard is made available to promote the timely dissemination of this information in an accurate manner to the public.

"जानने का अधिकार, जीने का अधिकार"
Mazdoor Kisan Shakti Sangathan
"The Right to Information, The Right to Live"

"पुराने को छोड नये के तरफ"
Jawaharlal Nehru
"Step Out From the Old to the New"

IS 101-1-5 (1989): Methods of sampling and test for paints, varnishes and related products, Part 1: Tests on liquid paints (general and physical), Section 5: Consistency [CHD 20: Paints, Varnishes and Related Products]

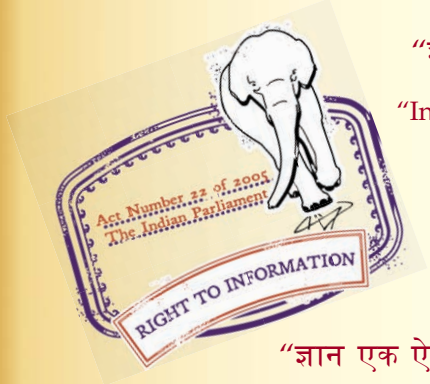

"ज्ञान से एक नये भारत का निर्माण"
Satyanarayan Gangaram Pitroda
"Invent a New India Using Knowledge"

"ज्ञान एक ऐसा खजाना है जो कभी चुराया नहीं जा सकता है"
Bhartṛhari—Nītiśatakam
"Knowledge is such a treasure which cannot be stolen"

BLANK PAGE

PROTECTED BY COPYRIGHT

IS 101 (Part 1/Sec 5) : 1989
(Reaffirmed 2004)

Indian Standard
MATHODS OF SAMPLING AND TEST FOR PAINTS, VARNISHES AND RELATED PRODUCTS

PART 1 TESTS ON LIQUID PAINTS (GENERAL AND PHYSICAL)

Section 5 Consistency

(Third Revision)

Third Reprint NOVEMBER 2008
(Including Amendment No. 1 & 2)

UDC 667.612 : 620.163.1

© BIS 1990

BUREAU OF INDIAN STANDARDS
MANAK BHAVAN, 9 BAHADUR SHAH ZAFAR MARG
NEW DELHI 110002

eptember 1990

Price Group 3

Paints and Allied Products Sectional Committee, CDC 8

FOREWORD

This Indian Standard (Third Revision) was adopted by the Bureau of Indian Standards on 30 June 1989, after the draft finalized by the Paints and Allied Products Sectional Committee had been approved by the Chemical Division Council.

Consistency is an important property of paints and related products. It is the apparent viscosity of the material when shearing force of varying degrees are applied to it in various ways. Qualitatively and traditionally consistency of a paint material is judged by inserting a clean metal rod or palette knife into the original container and examining the nature of settling. The material should not cake inside the container and shall be in such a condition that stirring easily produces a smooth uniform paint suitable for application by specified method.

This standard supersedes 7.4 of IS 101 : 1964 'Methods of test for ready mixed paints and enamels (second revision)'. In the preparation of this standard, considerable assistance has been taken from ISO 2884-1974 'Paints and varnishes — determination of viscosity at a high rate of shear' prepared by the International Organization for Standardization (ISO) and ASTM D 562-1985 'Test method for Consistency of paints using the stromer viscometer' prepared by ASTM, Philadelphia, USA.

Brookfield viscometer method shall be incorporated at a later stage.

AMENDMENT NO. 1 APRIL 1998
TO
IS 101 (PART 1/ SEC 5) : 1989 METHODS OF SAMPLING AND TEST FOR PAINTS, VARNISHES AND RELATED PRODUCTS

PART 1 TESTS ON LIQUID PAINTS (GENERAL AND PHYSICAL)

Section 5 Consistency

(Third Revision)

(*Page* 1, *clause* **3.1.1.4**) — Substitute the following for the existing matter:

'Calibration of Master flow cup shall be carried out at NPL/NTH atleast once in a period of five years for the requirements mentioned under:

i) All dimensions as per Fig. 1; and

ii) Flow rate with the standard newtonian liquid of known viscosity, at 30 ± 0.5°C'.

(*Page* 2, *Fig.* 1) — Substitute the figure on page 2 for the existing figure.

(*Page* 2, *clause* **3.2.2**, *line* 3) — Substitute '**3.2.4**' *for* '**4.2.4**'.

(*Page* 2, *clause* **3.2.4**, *line* 2) — Substitute 'at 30 ± 1°C for the words 'is within 0.5°C of the test temperature'.

1—114 BIS/ND/08

FOREWORD

This Indian Standard (Third
30 June 1989, after the draft fir
been approved by the Chemical

Consistency is an important pr
of the material when shearin
Qualitatively and traditionally
metal rod or palette knife into
material should not cake inside
produces a smooth uniform pair

This standard supersedes 7.4 of
(second revision)'. In the pre
from ISO 2884-1974 'Paints an
prepared by the International
'Test method for Consistency
Philadelphia, USA.

Brookfield viscometer method s

Amend No. 1 to IS 101 (Part 1/Sec 5) : 1989

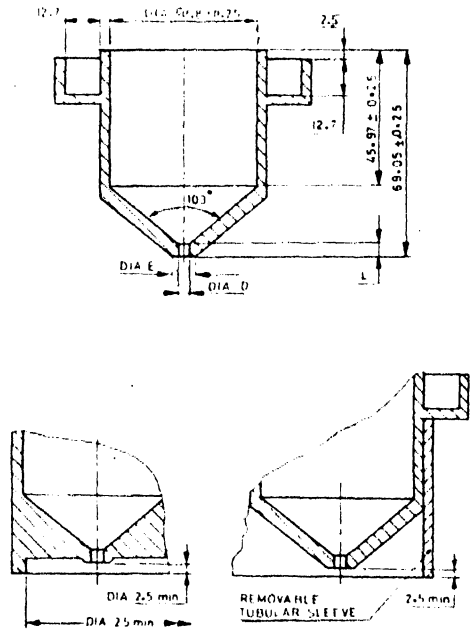

TYPICAL PROTECTIVE SKIRT (INTEGRAL)

TYPICAL PROTECTIVE SKIRT (REMOVABLE)

FLOW CUP DESIGNATION	*D*.DIA ± .015	*L* ± 0.05	*E* ± 0.5
No. 2	2.380	4.62	8
No. 3	3.170	4.95	8
No. 4	3.970	5.26	8
No. 5	4.760	5.59	8
No. 6	7.120	6.60	10

All dimensions in millimetres.

FIG. 1 FLOW CUP

(CHD 020)

AMENDMENT NO. 2 AUGUST 2000
TO
IS 101 (Part 1/Sec 5) : 1989 METHODS OF SAMPLING AND TEST FOR PAINTS, VARNISHES AND RELATED PRODUCTS

PART 1 TESTS ON LIQUID PAINTS (GENERAL AND PHYSICAL)

Section 5 Consistency

(Third Revision)

(*Page* 2, *clause* 3.1.1.4, *Amendment No.* 1, *Fig.* 1) — Substitute the following figure for the existing:

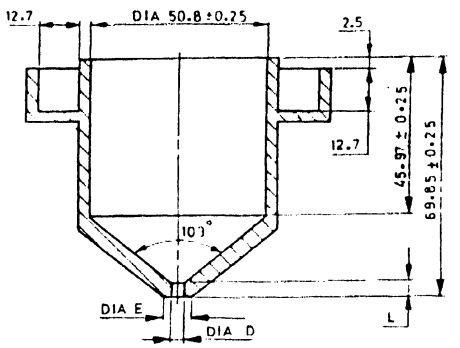

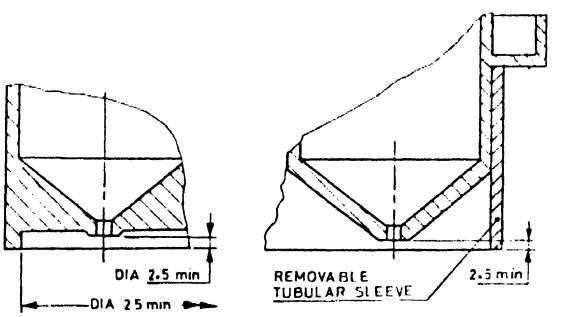

TYPICAL PROTECTIVE SKIRT (INTEGRAL)

TYPICAL PROTECTIVE SKIRT (REMOVABLE)

FLOW CUP DESIGNATION	*D*, DIA ± 0.015	*L* ± 0.05	*E* ± 0.5
No. 2	2.380	4.62	8
No. 3	3.170	4.95	8
No. 4	3.970	5.26	8
No. 5	4.760	5.59	8
No. 6	7.120	6.60	10

All dimensions in millimetres.

FIG. 1 FLOW CUP

(CHD 20)

Indian Standard

METHODS OF SAMPLING AND TEST FOR PAINTS, VARNISHES AND RELATED PRODUCTS

PART 1 TESTS ON LIQUID PAINTS (GENERAL AND PHYSICAL)

Section 5 Consistency

(*Third Revision*)

1 SCOPE

1.1 This standard prescribes three methods for determining the dynamic viscosity of paints and related products at a rate of shear not less than 5 000 S^{-1} and not more than 20 000 S^{-1}. The methods are:

a) Flow cup method,

b) Cone and plate or concentric cylinder viscometer method, and

c) Stromer viscometer method.

2 SAMPLING

2.1 A representative sample to be tested shall be taken as prescribed in IS 101 (Part 1/Sec 1): 1986 'Methods of sampling and test for paints and related products: Part 1 Tests on liquid paints (general and physical), Section 1 Sampling (*third revision*)'. The sample shall be prepared as prescribed in IS 101 (Part 1/Sec 2) : 1987 'Preliminary examination and preparation of samples for testing (*third revision*)'. The sample shall be strained through an IS-Sieve of 125 µm into a clean container.

3 FLOW CUP METHOD

3.1 Apparatus

3.1.1 *Flow Cup*

3.1.1.1 *Dimensions*

The dimensions of the flow cup and the tolerances allowed in manufacture shall be as given in Fig. 1. The most critical tolerance is internal diameter of the jet of the cup since the flow time is inversely proportional to the fourth power of this dimension. The jet of the cup shall be made of stainless steel or sintered carbide, unless specified otherwise, and the body of the cup shall be made of a material which is corrosion resistant and not affected by the products to be tested.

3.1.1.2 *Constructions*

The dimensions not specified shall be such that no distortion of the cup can occur in use. The external shape shown in Fig. 1 is recommended, but may be modified for convenience of use or manufacture, provided that the protruding jet of the cup is protected from accidental damage as far as possible by an external protective sleeve. Such a protective sleeve shall not be immediately adjacent to the jet so as to cause a capillary action when the material under test flows out.

3.1.1.3 *Finish*

The interior surface of the cup, including the orifice, shall be smooth and free from turning marks, crevices, ledges and burrs which may cause random flow or trap some sample or cleaning material. The standard of finish required shall be equivalent to a maximum roughness of not more than 0·5 µm defined as the arithmetic mean deviation *Ra* from the mean line of the profile (*see* IS 3073 : 1967).

3.1.1.4 *Calibration*

The cup shall be calibrated using a standard mineral oil of known kinematic viscosity. The procedure used shall be as given in Annex A.

3.1.2 *Thermometer*, accurate to 0·2°C and graduated at 0·1°C intervals.

3.1.3 *Stand*, suitable for holding the flow cup and provided with levelling screws.

3.1.4 *Spirit Level*, preferably of the circular type.

3.1.5 *Flat Glass Plate or Straight Edge Scraper*

3.1.6 *Stop Watch*, or other suitable timing device with scale divisions of 0·2 second or finer and accurate to within 0·1 percent when tested over a 60-minute period.

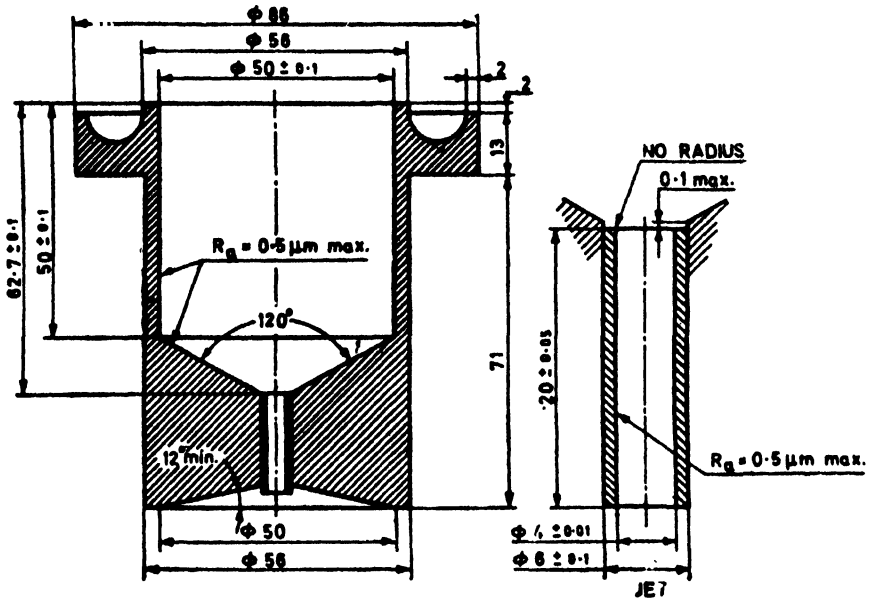

All dimensions in millimetres.

FIG. 1 FLOW CUP

3.1.7 Temperature controlled room or enclosure for maintaining the cup and sample at a constant temperature

3.2 Procedure

3.2.1 Place the flow cup on the stand in a place free from draughts, at ambient temperature. Level by the use of a spirit level placed on the rim.

3.2.2 Strain the sample into a clean container and adjust the temperature to meet the requirements specified in **4.2.4**. A 150 micron IS-Sieve (*see* IS 460 : 1962) or finer, is suitable. This and the following operations shall be carried out with minimum delay to avoid loss of solvent.

3.2.3 With the orifice closed by the finger, fill the cup with the bubble-free sample until it just begins to overflow into the gallery, pouring slowly to minimize the formation of air bubbles. If bubbles are present, allow them to rise and then remove them from the surface.

3.2.4 Check that the temperature of the material in the cup is within 0·5°C of the test temperature. The cup may be at a temperature different from that of the sample and it is recommended that a minute or so be allowed to elapse before checking the temperature.

3.2.5 Place the scraper on the rim of the cup and draw it firmly across until the excess of the sample has flowed into the gallery. Place the receiver under the cup. Remove the finger and simultaneously start the stop-watch. Watch the stream of liquid flowing from the orifice. At the first evidence of a break of the stream into droplets, stop the stop-watch. The time taken is recorded in seconds as time of flow in flow cup.

4 CONE AND PLATE, CONCENTRIC CYLINDER OR IMMERSION VISCOMETER METHOD

4.1 Apparatus

Viscometer of cone and plate or concentric cylinder type, working at a rate of shear of 5 000 to 20 000 S^{-1}. The details of the apparatus used shall be given in the test report.

4.1.1 *Checking of Apparatus*

Check the apparatus daily when in regular use, by carrying out the test as given in **4.2** using standard refined mineral oils having Newtonian characteristics and known viscosities (*see* Note). If the readings obtained differ from the known viscosities of the standard oils by more than 5 percent, the apparatus should be checked by a competent authority or returned to the manufacturer for adjustment.

NOTE — It is convenient to use three mineral oils with viscosities certified by an approved laboratory and lying between 0·05 and 0·5 N S/m^2 (50 and 500 Cp).

4.1.2 *Checking of Temperature Control*

The temperature should not change during the determination. In order to check the temperature control, carry out the test as given in **4.2** with a standard refined mineral oil of highest viscosity. Allow the viscometer to run with this oil for 5 minutes after which the reading shall

not have decreased by more than 10 percent. If the decrease is more than 10 percent, the apparatus is unsuitable for the determination of viscosities at high rates of shear in accordance with this Indian Standard.

4.2 Procedure

4.2.1 *Cone and Plate or Concentric Cylinder Viscometers* The following sequence of operations shall be carried out in duplicate immediately after the preparation of the sample according to **2**.

4.2.1.1 Adjust the temperature of the stationary part of the viscometer (Stator or plate) to 27 ± 0·5°C or to an agreed temperature. Transfer a suitable amount of the product to be tested to the appropriate part of the viscometer, taking case to avoid the inclusion of any bubbles, and adjust the other part to the correct position. Wait for the prescribed time, to allow the sample to attain the agreed temperature. Start the rotor and record the reading on the scale when the pointer becomes steady.

NOTE — In some cases it is difficult to judge whether a constant reading has been obtained. However, if the pointer does not become steady after 15 seconds, the rating at 15 seconds shall be recorded and the lack of a constant reading shall be mentioned in the test report. If highly accurate readings are required, the readings shall be made above the first 10 percent of the scale.

4.2.1.2 If the reading does not directly indicate the viscosity, multiply the reading by required conversion factor or use the appropriate calibration curve to obtain the viscosity.

4.2.2 *Immersion Viscometers*

(Viscometers where stator as well as rotor are immersed in the material under test.) If an immersion viscometer is used, transfer the material to a suitable container and bring it to a temperature of 27 ± 0·5°C or to the agreed temperature. Then immerse the appropriate part of the viscometer in the product, after which carry out the determination according to the instructions of the manufacturer.

4.2.2.1 *Cleaning of the apparatus*

Clean the stator and rotor carefully after each test employing a suitable solvent. The procedure to be used will depend on apparatus, but care shall be taken to remove all of the test material and cleaning solvent.

NOTE — Cleaning solvents which may damage the apparatus and metal cleaning tools shall not be used.

4.2.2.2 *Precision*

The results of two determinations with the same apparatus taken shortly after one another in the same laboratory by the same operator shall not differ by more than 5 percent of their mean.

5 STROMER VISCOMETER METHOD

5.0 General

This method is useful in measuring consistency of paints and viscosity of resin solutions or liquids and best suited for measuring the consistency of collodial dispersion of heterogenous phases. The mass required to produce a rotational frequency of 200 rev/min for an off set paddle rotor immersed in a viscous medium is provided by Stromer Viscometer in Kerb Units (KU). This is a logarithmic function of load required to produce 200 rpm.

5.1 Apparatus

5.1.1 *Stromer Viscometer*

Stromer Viscometer with the paddle rotor, made of stainless steel, shall be as shown in Fig. 2 and Fig. 3. To obtain 200 rev/min rotation the stroboscopic timer attachment is provided to obtain measurement fast and accurately.

NOTE — Stromer viscometer can be obtained from Gardner Laboratories Inc, 5521 Landy Lane, Bethesda Md 20814.

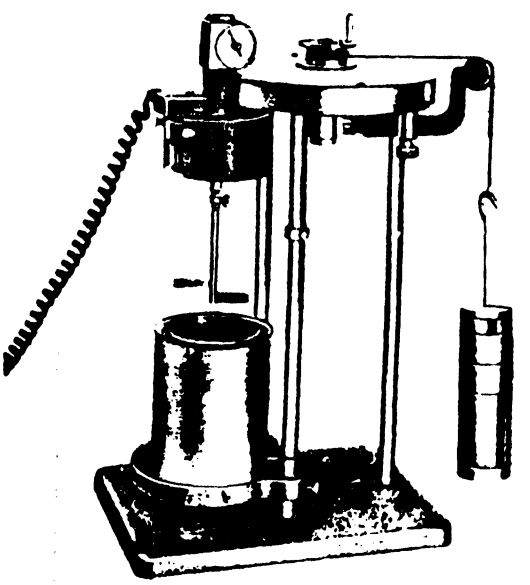

FIG. 2 STROMER VISCOMETER WITH PADDLE-TYPE ROTOR AND SCROBOSCOPIC TIMER

5.1.2 *Beaker*, 500 ml capacity, 85 mm diameter.

5.1.3 *Thermometer*, 110°C with 0·5°C divisions.

5.1.4 *Weights*, 5 to 1 000 g.

5.2 Calibration of the Instrument

5.2.1 Two standard oils, having absolute viscosities (in poise) closer to the material to be measured, are taken with the viscosities of three oils to be atleast 5 poise apart.

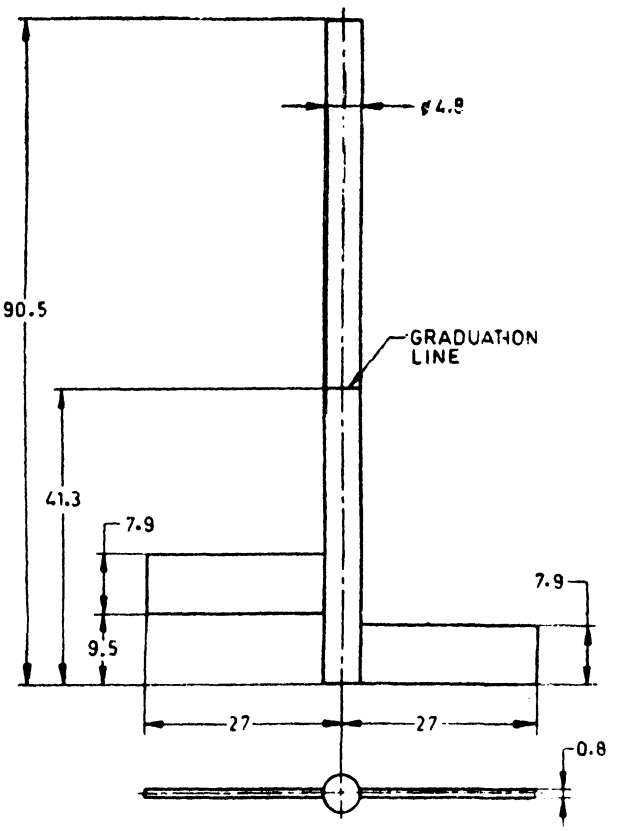

All dimensions in millimetres.
Tolerance on dimensions = ± 0·1 mm
Material : Stainless Steel

FIG. 3 PADDLE-TYPE ROTOR FOR USE WITH STROMER VISCOMETER

5.2.2 Assign load values for obtaining 200 rpm to each of the oils by the equation:

$$L = (610\eta + 906{\cdot}6\,\rho)/30$$

where

η = viscosity of oil in poise,

ρ = density of the oil, and

L = load.

5.2.3 Make sure the string on the drum is properly wound without overlapping, after removing from the viscometer, the rotor and the weight holder attached to the string.

5.2.4 Place 5 g weight on to the weight holder and release the brake. If the viscometer starts to run from dead start and continues to do so to several windings of string around the drum then the instrument is quite sensitive. The instrument should be reconditioned if it does not start.

5.2.5 Dimensions of the paddle shall correspond closely to the ones given in Fig. 3 (tolerance ±0·1 mm).

5.2.6 Standard oil samples, with known viscosities and load in g required to produce 200 rev/min, are cooled to 27 ± 0·5°C. One of the oils is placed under the instrument with the rotor dipping in the oil up to the mark desired. The exact load required for producing 200 rev/min is determined. Similarly, determine the load required for the other oil. If the loads determined is within ±15 percent of the calculated loads, the instrument is in satisfactory condition.

5.3 Determination of Consistency of Unknown Sample

5.3.1 The sample is thoroughly mixed and transferred to a 400 ml beaker to fill it completely leaving 20 mm void space from the top.

5.3.2 It is then placed in a constant temperature water bath to bring the temperature of the sample to 27 ± 0·5°C. Place the sample under the stromer instrument.

5.3.3 The temperature of the rotor should also be 27 ± 0·5°C.

5.3.4 Connect the lamp circuit for the stroboscopic attachment to an electric source.

5.3.5 Connect the weight holder to the string and lower the instrument such that the rotor dips inside the sample to a desired height.

5.3.6 Place weights on the holder and determine the load that will produce 200 rev/min pattern on the stroboscopic timer. If the load is more, the lines will look as though they are moving along the rotor direction; remove the weights in that case. If the lines are moving in the opposite direction then add weights to the holder. The load for 200 rev/min will be appearing as stationary lines in the stroboscopic timer.

5.3.7 Repeat the test till consistent values of load is obtained (that is, within 5 g).

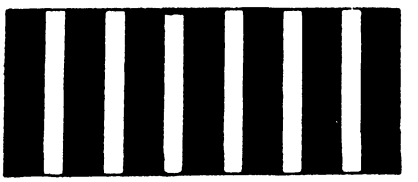

FIG. 4 STROBOSCOPIC LINES OPENING WHEN TIMER IS ADJUSTED TO EXACTLY 200 rev/min

5.4 Calculation

5.4.1 Calculate Kerb Units (KU) for the load required to produce 200 rev/min from Table 1.

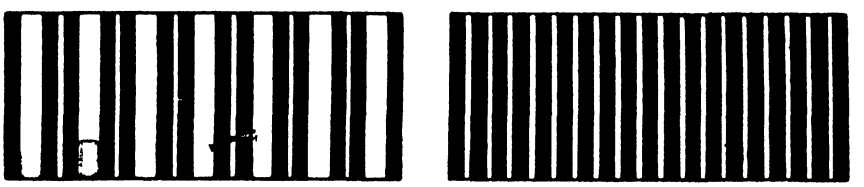

FIG. 5 STROBOSCOPIC LINES APPEARING AS MULTIPLES THAT MAY BE OBSERVED BEFORE 200 rem/min IS REACHED

Table 1 Kerb Units Corresponding to Driving Weight Required to Produce 200 rev/min Rotation

(*Clause* 5.4.1)

(For Use with Stromer Viscometer Equipped with Stroboscopic Timer)

Grams KU	Grams KU	Grams KU	Grams KU	Grams KU	Grams KU	Grams KU	Grams KU	Grams KU	Grams KU	Grams KU
	100 61 105 62	200 82 205 63	300 95	400 104	500 112	600 120	700 125	800 131	900 136	1 000 140
	110 63 115 64	210 83 215 84	310 96	410 105	510 113	610 120	710 126	810 132	910 136	1 010 140
	120 65 125 67	220 85 225 86	320 97	420 106	520 114	620 121	720 126	820 132	920 137	1 020 140
	130 68 135 69	230 86 235 87	330 98	430 106	530 114	630 121	730 127	830 133	930 137	1 030 140
	140 70 145 71	240 88 245 88	340 99	440 107	540 115	640 122	740 127	840 133	940 138	1 040 140
	150 72 155 73	250 89 255 90	350 100	450 108	550 116	650 122	750 128	850 134	950 138	1 050 141
	160 74 165 75	260 90 265 91	360 101	460 109	560 117	660 123	760 129	860 134	960 138	1 060 141
70 53 75 54	170 76 175 77	270 91 275 92	370 102	470 110	570 118	670 123	770 129	870 135	970 139	1 070 141
80 55 85 57	180 78 185 79	280 93 285 93	380 102	480 110	580 118	680 124	780 130	880 135	980 139	1 080 141
90 58 95 60	190 80 195 81	290 94 295 94	390 103	490 111	590 119	690 124	790 131	890 136	990 140	1 090 141

ANNEX A

(*Clause* 3.1.1.4)

CALIBRATION PROCEDURE

A-1 Cups which are dimensionally similar will give similar flow times with newtonian liquids provided the temperature of testing is precisely the same. The use of such liquids to calibrate cups provides a useful means of initially checking that dimensionally similar cups are within the accepted tolerances, and also for checking from time to time whether any wear or damage has taken place sufficient to bring a cup outside the accepted tolerances.

A-2 Since a liquid flows out of an orifice under its hydrostatic pressure, flow time is related to its kinematic viscosity.

A-3 A calibration curve relating flow time and kinematic viscosity is given in Fig. 6. This curve has been carefully constructed from flow time values determined by using different flow cup conforming to the dimensional requirements of Fig. 1. The liquids used were mineral oils of newtonian characteristics whose kinematic viscosity over a range of temperatures had been carefully determined. For the range 25 to 150 cSt, the curve corresponds closely to the equation:

$$V = 1{\cdot}37t - \frac{200}{t}$$

where

V = kinematic viscosity, in centistokes; and

t = flow time, in seconds.

A-4 Using such oils a cup can be calibrated by recording the flow times of the oils at temperatures for which the kinematic viscosities are known, and comparing such flow times with the values given in Fig. 6. The cup may be deemed satisfactory for use if the method used for determination of flow time is exactly in accordance with the procedure laid down in this standard except that all temperature shall be recorded to the nearest 0·1°C, and the recorded flow time is within ±3 percent of the corresponding value on the calibration curve. For reference purposes, however, it is advisable to apply a correction factor calculated from the deviation from the calibration curve on the cup used.

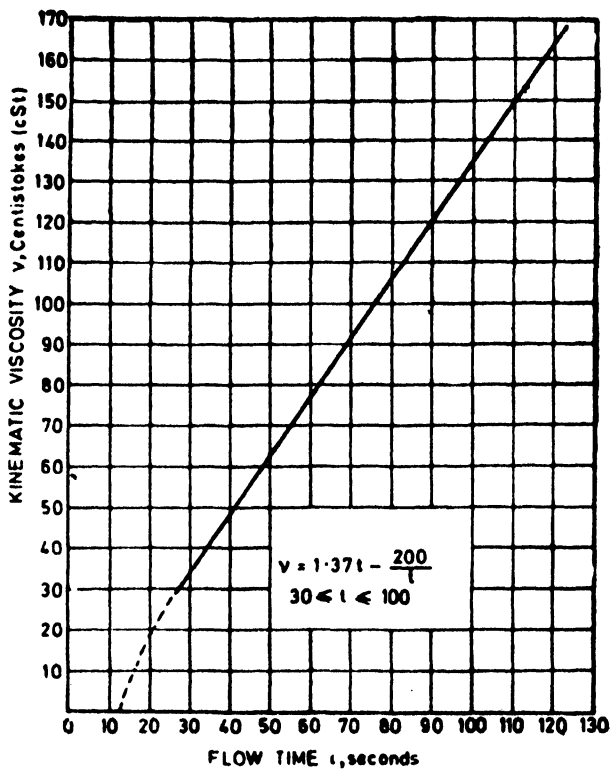

FIG. 6 CALIBRATION CURVE

GMGIPN—114 BIS/ND/2008—200

Bureau of Indian Standards

BIS is a statutory institution established under the *Bureau of Indian Standards Act*, 1986 to promote harmonious development of the activities of standardization, marking and quality certification of goods and attending to connected matters in the country.

Copyright

BIS has the copyright of all its publications. No part of these publications may be reproduced in any form without the prior permission in writing of BIS. This does not preclude the free use, in course of implementing the standard, of necessary details, such as symbols and sizes, type or grade designations. Enquiries relating to copyright be addressed to the Director (Publications), BIS.

Review of Indian Standards

Amendments are issued to standards as the need arises on the basis of comments. Standards are also reviewed periodically; a standard along with amendments is reaffirmed when such review indicates that no changes are needed; if the review indicates that changes are needed, it is taken up for revision. Users of Indian Standards should ascertain that they are in possession of the latest amendments or edition by referring to the latest issue of 'BIS Catalogue' and 'Standards: Monthly Additions'.

This Indian Standard has been developed from Doc : No. CDC 8 (9138).

Amendments Issued Since Publication

Amendment No.	Date of Issue	Text Affected

BUREAU OF INDIAN STANDARDS

Headquarters:

Manak Bhavan, 9 Bahadur Shah Zafar Marg, New Delhi 110 002
Telephones: 2323 0131, 2323 3375, 2323 9402 *Website*: www.bis.org.in

Regional Offices:

		Telephones
Central :	Manak Bhavan, 9 Bahadur Shah Zafar Marg NEW DELHI 110 002	2323 7617 2323 3841
Eastern :	1/14, C.I.T. Scheme VII M, V.I.P. Road, Kankurgachi KOLKATA 700 054	2337 8499, 2337 8561 2337 8626, 2337 9120
Northern :	SCO 335-336, Sector 34-A, CHANDIGARH 160 022	260 3843 260 9285
Southern :	C.I.T. Campus, IV Cross Road, CHENNAI 600 113	2254 1216, 2254 1442 2254 2519, 2254 2315
Western :	Manakalaya, E9 MIDC, Marol, Andheri (East) MUMBAI 400 093	2832 9295, 2832 7858 2832 7891, 2832 7892

Branches: AHMEDABAD. BANGALORE. BHOPAL. BHUBANESHWAR. COIMBATORE. FARIDABAD. GHAZIABAD. GUWAHATI. HYDERABAD. JAIPUR. KANPUR. LUCKNOW. NAGPUR. PARWANOO. PATNA. PUNE. RAJKOT. THIRUVANANTHAPURAM. VISAKHAPATNAM.

PRINTED BY THE GENERAL MANAGER, GOVT. OF INDIA PRESS, NASHIK-422 006