IS 8911 (2005): Countersunk Slotted Raised Countersunk Head Screws (common head style) - Product Grade A [PGD 31: Bolts, Nuts and Fasteners Accessories]

BLANK PAGE

भारतीय मानक

काउंटरसंक खाँचेदार रेज़्ड हैड स्क्रू (सामान्य हैड स्टाईल) — उत्पाद ग्रेड ए

(पहला पुनरीक्षण)

Indian Standard

COUNTERSUNK SLOTTED RAISED HEAD SCREWS (COMMON HEAD STYLE) — PRODUCT GRADE A

(First Revision)

ICS 21.060.10

BUREAU OF INDIAN STANDARDS
MANAK BHAVAN, 9 BAHADUR SHAH ZAFAR MARG
NEW DELHI 110002

September 2005

Price Group 3

Bolts, Nuts and Fasteners Accessories Sectional Committee, MGP 33

NATIONAL FOREWORD

This Indian Standard (First Revision) which is identical with ISO 2010 : 1994 'Countersunk slotted raised head screws (common head style) — Product grade A' issued by the International Organization for Standardization (ISO) was adopted by the Bureau of Indian Standards on the recommendations of the Bolts, Nuts and Fasteners Accessories Sectional Committee and approval of the Medical Instruments, General and Production Engineering Division Council.

The original version of this standard was published in 1978. The earlier edition was based on ISO 2010. This first revision has been harmonized with ISO 2010 : 1994 by adoption to make pace with the latest developments taken place at international level.

The text of ISO Standard has been approved as suitable for publication as an Indian Standard without deviation. Certain terminology and conventions are, however, not identical to those used in Indian Standards. Attention is drawn especially to the following:

a) Wherever the words 'International Standard' appear, referring to this standard, they should be read as 'Indian Standard'.

b) Comma (,) has been used as a decimal marker while in Indian Standards, the current practice is to use a point (.) as the decimal marker.

In this adopted standard, reference appears to certain International Standards for which Indian Standards also exist. The corresponding Indian Standards, which are to be substituted in their places, are listed below along with their degree of equivalence for the editions indicated:

International Standard	*Corresponding Indian Standard*	*Degree of Equivalence*
ISO 225 : 1983 Fasteners — Bolts, screws, studs and nuts — Symbols and designation of dimensions	IS 8536 : 1987 Fasteners — Bolts, screws, studs and nuts — Symbols and designation of dimensions (*first revision*)	Identical
ISO 261 : 1973[1] ISO general purpose metric screw threads — General plan	IS 4218 (Part 2) : 2001 ISO general purpose metric screw threads: Part 2 General plan (*second revision*)	Technically equivalent
ISO 888 : 1976 Bolts, screws and studs — Nominal lengths, and thread lengths for general purpose bolts	IS 4206 : 1987 Dimensions for nominal lengths and thread lengths for bolts, screws and studs (*first revision*)	Identical
ISO 898-1 : 1988[2] Mechanical properties of fasteners — Part 1 : Bolts, screws and studs	IS 1367 (Part 3) : 2002 Technical supply conditions for threaded steel fasteners: Part 3 Mechanical properties of fasteners made of carbon steel and alloy steel — Bolts, screws and studs (*fourth revision*)	Technically equivalent

[1] Since revised in 1998.
[2] Since revised in 1999.

International Standard	*Corresponding Indian Standard*	*Degree of Equivalence*
ISO 965-2 : 1980[1] ISO general purpose metric screw threads — Tolerances — Part 2 : Limits of sizes for general purpose bolt and nut threads — Medium quality	IS 14962 (Part 2) : 2001 ISO general purpose metric screw threads — Tolerances: Part 2 Limits of sizes for general purpose external and internal screw threads — Medium quality	Technically equivalent
ISO 3269 : 1988[2] Fasteners — Acceptance inspection	IS 1367 (Part 17) : 2005 Technical supply conditions for threaded steel fasteners: Part 17 Inspection, sampling and acceptance procedure (*fourth revision*)	do
ISO 3506 : 1979[3] Corrosion-resistant stainless steel fasteners — Specifications	IS 1367 (Part 14/Sec 1) : 2002 Technical supply conditions for threaded steel fasteners: Part 14 Mechanical properties of corrosion-resistant stainless-steel fasteners, Section 1 Bolts, screws and studs (*third revision*)	do
	IS 1367 (Part 14/Sec 2) : 2002 Technical supply conditions for threaded steel fasteners: Part 14 Mechanical properties of corrosion-resistant stainless-steel fasteners, Section 2 Nuts (*third revision*)	do
	IS 1367 (Part 14/Sec 3) : 2002 Technical supply conditions for threaded steel fasteners: Part 14 Mechanical properties of corrosion-resistant stainless-steel fasteners, Section 3 Set screws and similar fasteners not under tensile stress (*third revision*)	do
ISO 4042 : 1989[4] Threaded components — Electroplated coatings	IS 1367 (Part 11) : 2002 Technical supply conditions for threaded steel fasteners: Part 11 Electroplated coatings (*third revision*)	do
ISO 4759-1 : 1978[2] Tolerances for fasteners — Part 1 : Bolts, screws and nuts with thread diameters between 1.6 (inclusive) and 150 mm (inclusive) and product grades A, B and C	IS 1367 (Part 2) : 2002 Technical supply conditions for threaded steel fasteners: Part 2 Product grades and tolerances (*third revision*)	do

[1] Since revised in 1998.
[2] Since revised in 2000.
[3] Since revised in 1997 in three parts.
[4] Since revised in 1999.

International Standard	*Corresponding Indian Standard*	*Degree of Equivalence*
ISO 6157-1 : 1988 Fasteners — Surface discontinuities — Part 1 : Bolts, screws and studs for general requirements	IS 1367 (Part 9/Sec 1) : 1993 Technical supply conditions for threaded steel fasteners: Part 9 Surface discontinuities, Section 1 Bolts, screws and studs for general applications (*third revision*)	Identical
ISO 7721 : 1983 Countersunk head screws — Head configuration and gauging	IS 11362 : 1985 Head configuration and gauging of countersunk head screws	do
ISO 8992 : 1986 Fasteners — General requirements for bolts, screws, studs and nuts	IS 1367 (Part 1) : 2002 Technical supply conditions for threaded steel fasteners: Part 1 General requirements for bolts, screws and studs (*third revision*)	do

The concerned Technical Committee has reviewed the provisions of the following International Standard referred in this adopted standard and has decided that the same is acceptable for use in conjunction with this standard:

International Standard	*Title*
ISO 8839 : 1986	Mechanical properties of fasteners — Bolts, screws, studs and nuts made of non-ferrous metals

As decided by the Committee additional requirements of length gauge, packaging and marking are given in National Annex A. These additional requirements are part of this standard.

For the purpose of deciding whether a particular requirement of this standard is complied with, the final value, observed or calculated, expressing the result of a test, shall be rounded off in accordance with IS 2 : 1960 'Rules for rounding off numerical values (*revised*)'. The number of significant places retained in the rounded off value should be the same as that of the specified value in this standard.

Indian Standard

COUNTERSUNK SLOTTED RAISED HEAD SCREWS (COMMON HEAD STYLE) — PRODUCT GRADE A

(First Revision)

1 Scope

This International Standard specifies the characteristics of countersunk slotted raised head screws of product grade A and with threads from M1,6 to M10 inclusive.

If, in special cases, specifications other than those listed in this International Standard are required, they should be selected from existing International Standards, for example ISO 261, ISO 888, ISO 898-1, ISO 965-2 and ISO 3506.

2 Normative references

The following standards contain provisions which, through reference in this text, constitute provisions of this International Standard. At the time of publication, the editions indicated were valid. All standards are subject to revision, and parties to agreements based on this International Standard are encouraged to investigate the possibility of applying the most recent editions of the standards indicated below. Members of IEC and ISO maintain registers of currently valid International Standards.

ISO 225:1983, *Fasteners — Bolts, screws, studs and nuts — Symbols and designations of dimensions.*

ISO 261:1973, *ISO general purpose metric screw threads — General plan.*

ISO 888:1976, *Bolts, screws and studs — Nominal lengths, and thread lengths for general purpose bolts.*

ISO 898-1:1988, *Mechanical properties of fasteners — Part 1: Bolts, screws and studs.*

ISO 965-2:1980, *ISO general purpose metric screw threads — Tolerances — Part 2: Limits of sizes for general purpose bolt and nut threads — Medium quality.*

ISO 3269:1988, *Fasteners — Acceptance inspection.*

ISO 3506:1979, *Corrosion-resistant stainless steel fasteners — Specifications.*

ISO 4042:1989, *Threaded components — Electroplated coatings.*

ISO 4759-1:1978, *Tolerances for fasteners — Part 1: Bolts, screws and nuts with thread diameters between 1,6 (inclusive) and 150 mm (inclusive) and product grades A, B and C.*

ISO 6157-1:1988, *Fasteners — Surface discontinuities — Part 1: Bolts, screws and studs for general requirements.*

ISO 7721:1983, *Countersunk head screws — Head configuration and gauging.*

ISO 8839:1986, *Mechanical properties of fasteners — Bolts, screws, studs and nuts made of non-ferrous metals.*

ISO 8992:1986, *Fasteners — General requirements for bolts, screws, studs and nuts.*

3 Dimensions

See figure 1 and table 1.

The shank diameter is approximately equal to the pitch diameter or equal to the major thread diameter permissible.

NOTE 1 Symbols and designations of dimensions are specified in ISO 225.

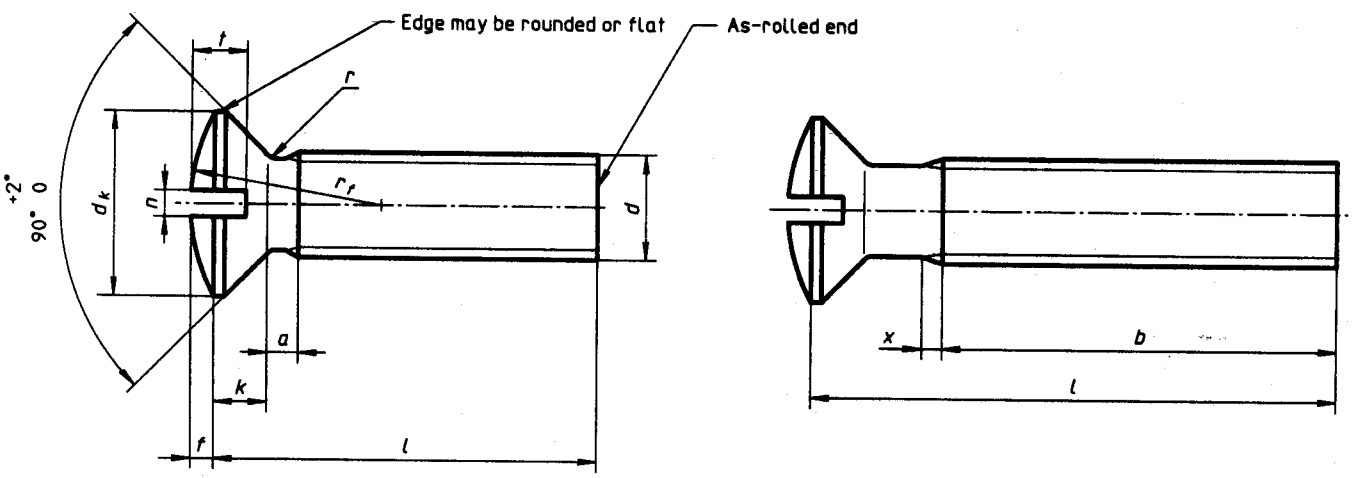

Figure 1

Table 1

Dimensions in millimetres

Thread (d)			M1,6	M2	M2,5	M3	(M3,5)[1]	M4	M5	M6	M8	M10
P[2]			0,35	0,4	0,45	0,5	0,6	0,7	0,8	1	1,25	1,5
a		max.	0,7	0,8	0,9	1	1,2	1,4	1,6	2	2,5	3
b		min.	25	25	25	25	38	38	38	38	38	38
d_k[3]	theoretical	max.	3,6	4,4	5,5	6,3	8,2	9,4	10,4	12,6	17,3	20
	actual	nom. = max.	3,0	3,8	4,7	5,5	7,30	8,40	9,30	11,30	15,80	18,30
		min.	2,7	3,5	4,4	5,2	6,94	8,04	8,94	10,87	15,37	17,78
f		≈	0,4	0,5	0,6	0,7	0,8	1	1,2	1,4	2	2,3
k[3]		nom. = max.	1	1,2	1,5	1,65	2,35	2,7	2,7	3,3	4,65	5
n		nom.	0,4	0,5	0,6	0,8	1	1,2	1,2	1,6	2	2,5
		max.	0,60	0,70	0,80	1,00	1,20	1,51	1,51	1,91	2,31	2,81
		min.	0,46	0,56	0,66	0,86	1,06	1,26	1,26	1,66	2,06	2,56
r		max.	0,4	0,5	0,6	0,8	0,9	1	1,3	1,5	2	2,5
r_f		≈	3	4	5	6	8,5	9,5	9,5	12	16,5	19,5
t		max.	0,80	1,0	1,2	1,45	1,7	1,9	2,4	2,8	3,7	4,4
		min.	0,64	0,8	1,0	1,20	1,4	1,6	2,0	2,4	3,2	3,8
x		max.	0,9	1	1,1	1,25	1,5	1,75	2	2,5	3,2	3,8
l[1),4)] nom.	min.	max.	Approximate mass, in kilograms per 1 000 pieces (ϱ = 7,85 kg/dm^3) (for information only)									
2,5	2,3	2,7	0,062									
3	2,8	3,2	0,067	0,119								
4	3,76	4,24	0,078	0,138	0,242							
5	4,76	5,24	0,09	0,156	0,272	0,395						
6	5,76	6,24	0,102	0,175	0,302	0,439	0,729	1,07				
8	7,71	8,29	0,125	0,212	0,362	0,527	0,849	1,23	1,73	2,79		
10	9,71	10,29	0,145	0,249	0,422	0,615	0,969	1,39	1,97	3,14	6,89	
12	11,65	12,35	0,165	0,287	0,482	0,703	1,09	1,54	2,21	3,49	7,53	11,4
(14)	13,65	14,35	0,185	0,325	0,543	0,791	1,21	1,7	2,45	3,84	8,17	12,5
16	15,65	16,35	0,205	0,362	0,603	0,879	1,33	1,85	2,69	4,19	8,81	13,5
20	19,58	20,42		0,436	0,723	1,06	1,57	2,17	3,17	4,89	10,1	15,5
25	24,58	25,42			0,874	1,28	1,87	2,56	3,77	5,77	11,7	18
30	29,58	30,42				1,5	2,17	2,95	4,37	6,64	13,3	20,6
35	34,5	35,5					2,47	3,34	4,97	7,52	14,9	23,1
40	39,5	40,5						3,73	5,57	8,39	16,5	25,6
45	44,5	45,5							6,16	9,27	18,1	28,1
50	49,5	50,5							6,76	10,1	19,7	30,7
(55)	54,05	55,95								11	21,3	33,2
60	59,05	60,95								11,9	22,9	35,7
(65)	64,05	65,95									24,5	38,2
70	69,05	70,95									26,1	40,8
(75)	74,05	75,95									27,7	43,3
80	79,05	80,95									29,3	45,8

NOTE — Commercial lengths are shown between the stepped, continuous, bold lines.

1) Sizes in parentheses should be avoided if possible.

2) P = pitch of the thread

3) See ISO 7721.

4) Screws with nominal lengths above the bold dotted line are threaded up to the head; $b = l - (k + a)$.

4 Specifications and reference International Standards

See table 2.

Table 2

Material		Steel	Stainless steel	Non-ferrous metal
General requirements	International Standard	ISO 8992		
Thread	Tolerance	6g		
	International Standards	ISO 261, ISO 965-2		
Mechanical properties	Property class	4.8, 5.8	A2-50, A2-70	. . .
	International Standards	ISO 898-1	ISO 3506	ISO 8839
Tolerances	Product grade	A		
	International Standard	ISO 4759-1		
Finish		Plain Requirements for electroplating are covered in ISO 4042. If different electroplating requirements are desired or if requirements are needed for other finishes, they shall be agreed between customer and supplier. Limits for surface discontinuities are covered in ISO 6157-1.		
Acceptability		Acceptance procedure is covered in ISO 3269.		

5 Designation

Example of designation: A countersunk slotted raised head screw with thread M5, nominal length l = 20 mm and property class 4.8 is designated as follows:

Countersunk raised head screw ISO 2010 - M5 × 20 - 4.8

NATIONAL ANNEX A

(*National Foreword*)

A-1 PACKAGING

The packaging of hexagon head bolts shall be in accordance with IS 1367 (Part 18) : 1996 'Industrial fasteners — Threaded steel fasteners — Technical supply conditions: Part 18 Packaging (*third revision*)'.

A-2 BIS CERTIFICATION MARKING

Details available with the Bureau of Indian Standards.

Bureau of Indian Standards

BIS is a statutory institution established under the *Bureau of Indian Standards Act,* 1986 to promote harmonious development of the activities of standardization, marking and quality certification of goods and attending to connected matters in the country.

Review of Indian Standards

Amendments are issued to standards as the need arises on the basis of comments. Standards are also reviewed periodically; a standard along with amendments is reaffirmed when such review indicates that no changes are needed; if the review indicates that changes are needed, it is taken up for revision. Users of Indian Standards should ascertain that they are in possession of the latest amendments or edition by referring to the latest issue of 'BIS Catalogue' and 'Standards : Monthly Additions'.

This Indian Standard has been developed from Doc : No. MGP/BP 33 (0401).

Amendments Issued Since Publication

Amend No.	Date of Issue	Text Affected

BUREAU OF INDIAN STANDARDS

Headquarters:

Manak Bhavan, 9 Bahadur Shah Zafar Marg, New Delhi 110 002
Telephones : 2323 0131, 2323 3375, 2323 9402 *Website :* www.bis.org.in

Regional Offices :		*Telephones*
Central	: Manak Bhavan, 9 Bahadur Shah Zafar Marg NEW DELHI 110 002	2323 7617 2323 3841
Eastern	: 1/14 C. I. T. Scheme VII M, V. I. P. Road, Kankurgachi KOLKATA 700 054	2337 8499, 2337 8561 2337 8626, 2337 9120
Northern	: SCO 335-336, Sector 34-A, CHANDIGARH 160 022	260 3843 260 9285
Southern	: C. I. T. Campus, IV Cross Road, CHENNAI 600 113	2254 1216, 2254 1442 2254 2519, 2254 2315
Western	: Manakalaya, E9 MIDC, Marol, Andheri (East) MUMBAI 400 093	2832 9295, 2832 7858 2832 7891, 2832 7892

Branches : AHMEDABAD. BANGALORE. BHOPAL. BHUBANESHWAR. COIMBATORE. FARIDABAD. GHAZIABAD. GUWAHATI. HYDERABAD. JAIPUR. KANPUR. LUCKNOW. NAGPUR. NALAGARH. PATNA. PUNE. RAJKOT. THIRUVANANTHAPURAM. VISAKHAPATNAM.

Printed at New India Printing Press, Khurja, India